UNIT 14, GRAYLANDS ESTATE



HORSHAM, WEST SUSSEX, RH12 4OD

Water Neutrality Verification Report

April 2025

eas ltd
Environmental Assessment Services Ltd

REPORT DATA SHEET

Requirement	Data
Report Reference	711a/GouldBaxter/Unit14GraylandsEstate/VR
Date	April 2025
Client	Dawn Shurville
Report type	Verification Report
Purpose	Planning Condition
Revisions	
Prepared by	Xanthe Lyford BSc (Hons) Signed [redacted]
Checked by	Eur Ing Malcolm McKemey BSc (Hons), CEng, CEnv, MICE, MIEAust, MCIWEM, MIEnvSc Signed [redacted]

GOULD BAXTER

UNIT 14, GRAYLANDS ESTATE, HORSHAM, RH12 4QD

Verification Report

April 2025

CONTENTS

1. THE SITE AND REDEVELOPMENT

2. SUMMARY OF WATER SAVING MEASURES TO BE INCORPORATED

3. RECOMMENDED WATER SAVING MEASURES & VERIFICATION

4. VERIFICATION

5. CONCLUSIONS

APPENDIX A: **Figures**

Figure 1: Site Location & Plan
Figure 2: The Site as Previously Used
Figure 3: The Proposed Development

APPENDIX B: **Photographs**

APPENDIX C: **Documentary Evidence**

GOULD BAXTER

UNIT 14, GRAYLANDS ESTATE, HORSHAM, RH12 4QD

Verification Report

April 2025

1. THE SITE AND REDEVELOPMENT

1.1 The site comprises a single storey building, formerly used as fitness studio and office, (but lying vacant for the past 12 months) with front and rear access, plus grassed/soft landscaped area to the rear.

1.2 The area of the site is approximately 240 m^2. The Ordnance Survey (OS) map reference for the site is TQ 17744 34706. The site elevation is approximately +92 m OD. See Figure 1 for the site location and Figure 2 for the previous site layout.

1.3 The redevelopment of the site included the conversion of the existing single storey building (previously sub-divided offices, exercise studios, kitchenette, male and female toilets and shower) into three consulting rooms, a cat and a dog ward, an operating theatre, lab, isolation room, office, staff room, freezer, reception and two disabled access toilets. The existing hardstanding to the front and side of the building and grassed area to the rear will remain as existing. See Figure 3 in Appendix A for the development plans.

1.4 The Water Neutrality Assessment of June 2024 identified potential water saving measures to be incorporated into the redevelopment, including the removal of the existing shower, flow rates of 2.5 l/min on the sinks and reduced flush toilets (duo 2/4 l/flush). This verification report is intended to confirm that the recommendations have been carried out as specified in the Water Neutrality Assessment report.

2. SUMMARY OF WATER SAVING MEASURES TO BE INCORPORATED

2.1 Water neutrality is defined as: *For every new development, total water use in the region after the development must be equal to or less than the total water use in the region before the new development.*

2.2 The site's recent use as an office and fitness studio used an average of 1520 l/day. It is therefore required that the veterinary surgery uses equal to or less water than the previous usage. The predicted usage was calculated using flow restricted taps in the toilet and clinical sinks (2.5 l/m) and low flush-volume toilets (single 2 l/flush or duo 2/4 l/flush).

3. RECOMMENDED WATER SAVING MEASURES & VERIFICATION

3.1 The recommended water saving measures given in the Water Neutrality Assessment, (Environmental Assessment Services Ltd, 2024) were:

All sinks to be fitted with taps with a flow rate to up to 2.5 l/min, either by design or using flow restrictor valves.

All toilets are to be of a reduced flush models with a flush-volume (short-flush if duo toilet) of 2 l/flush.

The shower is to be removed.

3.2 Verification is required to record the water saving measures and to provide confirmation that the redevelopment of the site has been successfully completed in accordance with the recommendations. This comprised:

- A site visit to inspect the sinks and toilets throughout the veterinary surgery to ensure that restrictor valves are fitted on all taps (limited to 2.5 l/m) and flush-volumes evidence is seen on the toilets, or in the associated fitting documentation/instructions. The site was visited on 4th April 2025.

- A timed measurement of volume from several of the sinks to verify the efficiency of the flow restrictor valves.

- A photographic record of all inspections once the fixtures and fittings are in place and functioning. See Appendix B for the photographic record of the inspection. Any additional documentary evidence is given in Appendix C.

4. VERIFICATION

4.1 The sinks were examined at the time of our visit, all the sinks at the site were fitted with restrictor valves to limit the flow to 2.5 l/m. The photographs in Appendix B show the sinks at the veterinary surgery, each fitted with a *Flomasta full bore isolating restrictor valve*. See Appendix C for information on the *Flowmasta* restrictor valves. Also shown in the photographs are the toilets, the *Fitzroy of London premium rimless close coupled Doc M toilet.* See Appendix C for information on the *Fitzroy of London* toilet.

4.2 The flow rate was tested on four of the sinks at the time of our visit using a times flow measurement. The results showed that the flow rate was at or below 2.5 l/m in all cases.

4.3 Documentation in Appendix C shows specifications for the sinks, taps, toilets for the staff and public toilets and restrictor valves, and details on the scrub down procedure to be used in preference to hand washing for use between consultations as an additional water reducing measure.

5. CONCLUSIONS

5.1 The site comprises a single storey building, formerly used as fitness studio and office (but lying vacant for the past 12 months) with front and rear access, plus grassed/soft landscaped area to the rear.

5.2 The redevelopment of the site included the conversion of the existing single storey building (previously sub-divided offices, exercise studios, kitchenette, male and female toilets and shower) into three consulting rooms, a cat and a dog ward, an operating theatre, lab, isolation room, office, staff room, freezer, reception and two disabled access toilets.

5.3 It was recommended in the Water Neutrality Assessment (Environmental Assessment Services Ltd 2024) that sinks with taps with a flow rate of 2.5 l/m or fitted with a 2.5 l/m with a restrictor valve were fitted throughout the veterinary surgery, and toilets with a single flush of 2 l/flush or a duo flush of 2/4 l/flush and the shower to be removed.

5.4 The verification included a site visit to observe the fixtures and fittings once operational, photographic evidence was taken at the time of our visit. The fixtures and fittings were seen in operation at the time of our visit and the taps were seen with the restrictor valves in place on all taps. The flow rate of the taps was confirmed by timed measurements taken during the visit. The flush volume of the toilets were confirmed as 2 l/m.

5.5 The photographic evidence is provided in Appendix B and documentary evidence in Appendix C.

5.6 It is concluded that the redevelopment work has been carried out as recommended in the Water Neutrality Assessment and that water neutrality has successfully been achieved at the site.

✪ ✪ ✪ ✪ ✪ ✪ ✪

APPENDIX A

Figure 1: Site Location Plan
Figure 2: The Site as Previously Used
Figure 3: The Proposed Development

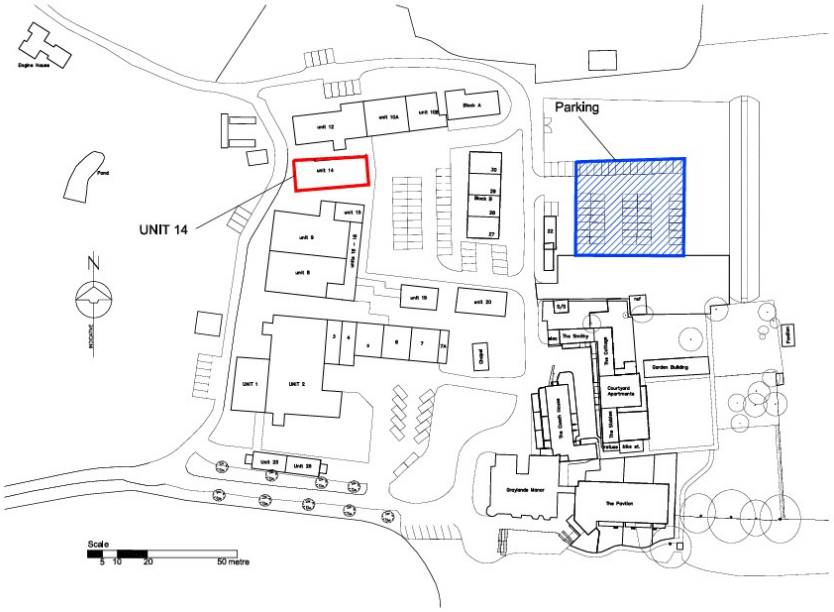

SITE/LOCATION PLAN
1:1250 @ A3

Unit 14 Graylands Estate

Horsham, RH12 4QD

Scale as shown

Figure 1: Site Location

April 2025

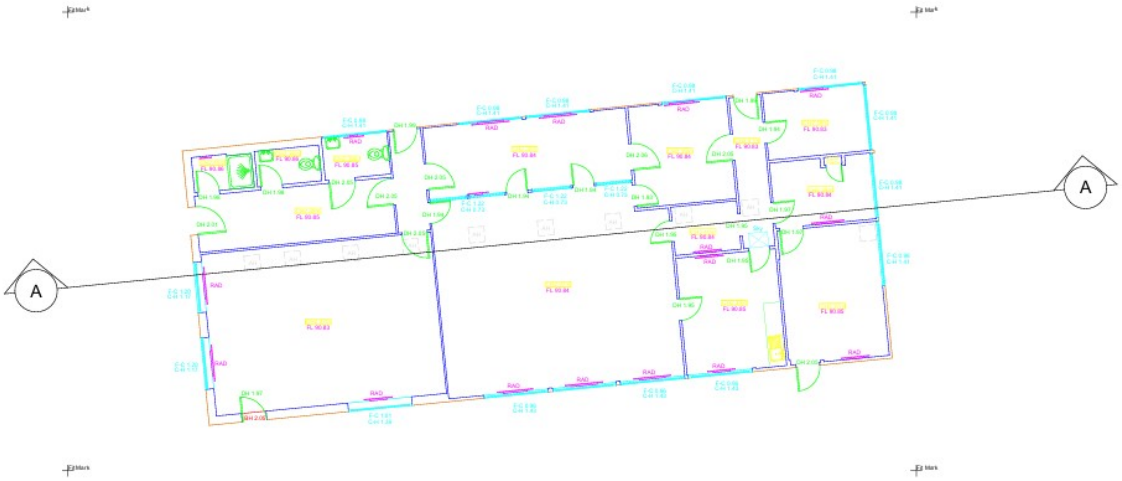

Ground Floor

Unit 14 Graylands Estate

Horsham, RH12 4QD

Scale as shown

Figure 2: Site as Previously Used

April 2025

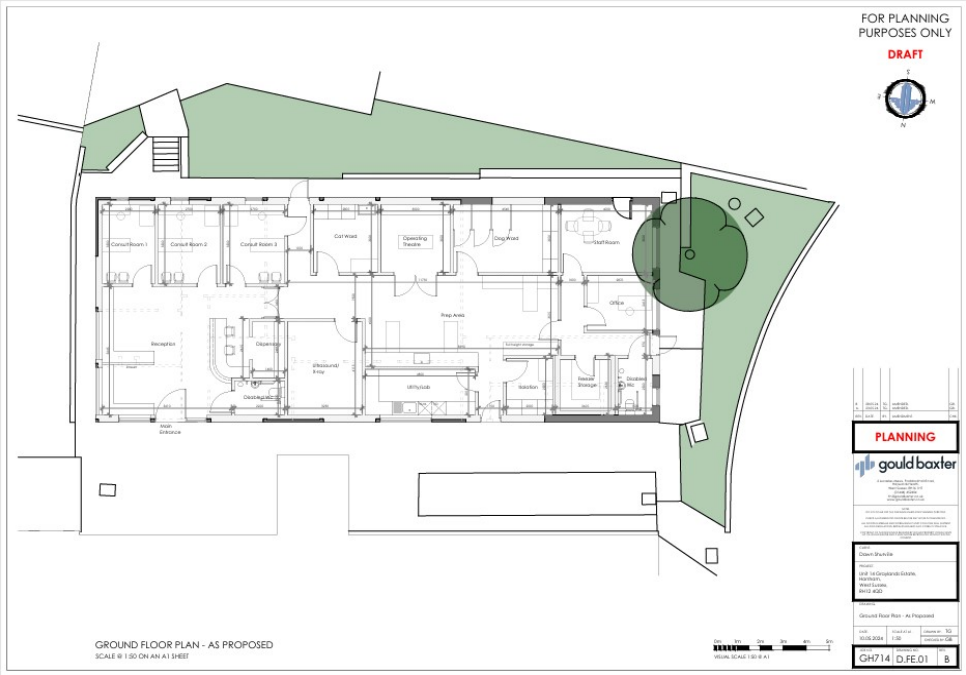

Unit 14 Graylands Estate

Horsham, RH12 4QD

Figure 3: Proposed Development

Scale as shown

April 2025

APPENDIX B

Photographs

Toilet (2 l/flush capacity)



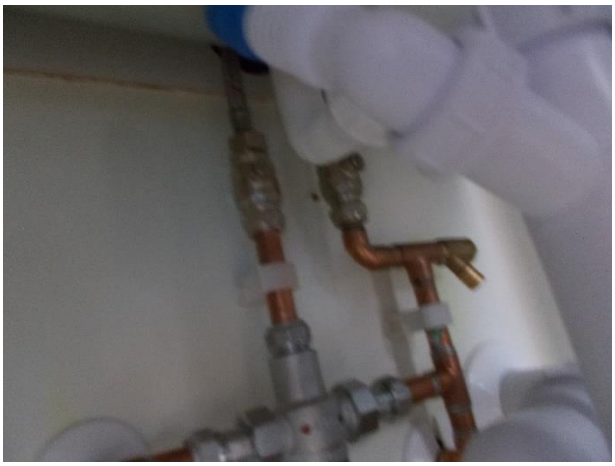

Consulting room 1 and restrictor valve





Consulting room 2 sink and restrictor valve





Consulting room 3 sink and restrictor valve





Cat ward sink and restrictor valve

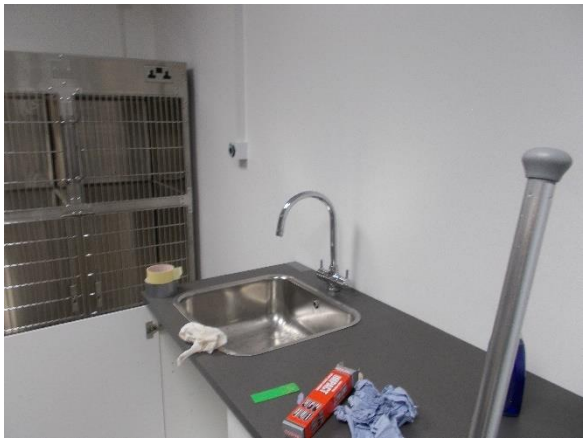



Utility laboratory sink and restrictor valve





Prep room sink and restrictor valve



Toilet sinks and restrictor valves









APPENDIX C:

Documentary Evidence

Restrictor valve specification
Restrictor valve image
Tap specifications for the toilets
Toilet specifications
Surgical scrub down technique details instead of hand washing

SPECIFICATION

Brand	Flomasta
Connection Type	Compression Connection
Construction Material (Plumbing)	Brass, Steel & Plastic
Manufacturer Guarantee	1 Year Guarantee
Pack Size	1
Pieces in Pack/Case	1
Product Diameter	15 mm
Product Type	Full Bore Isolating Valve
Valve Operation Type	1/4 Turn Operation
z1 - UK Manufacturer Name	Kingfisher International Products Limited
z2 - UK Manufacturer Postal Address	1 Paddington Square, W2 1GG
z3 - UK Manufacturer Electronic Address	www.kingfisher.com/products
z4 - EU Manufacturer Name	Kingfisher International Products B.V.
z5 - EU Manufacturer Postal Address	Rapenburgerstraat, Amsterdam, 1011, Netherlands

Valve restrictor spec

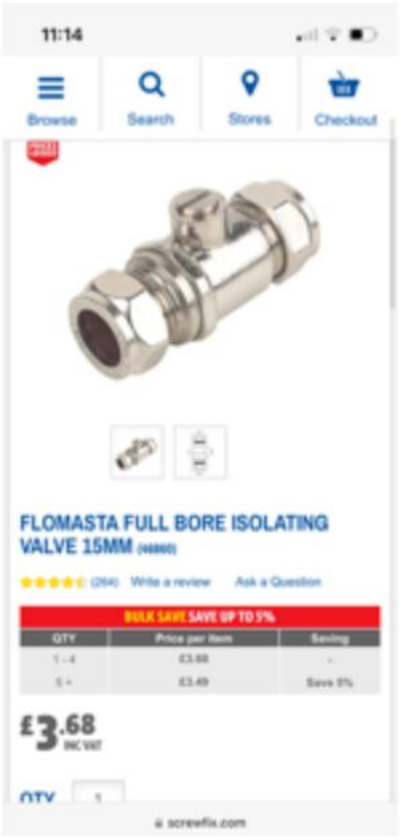

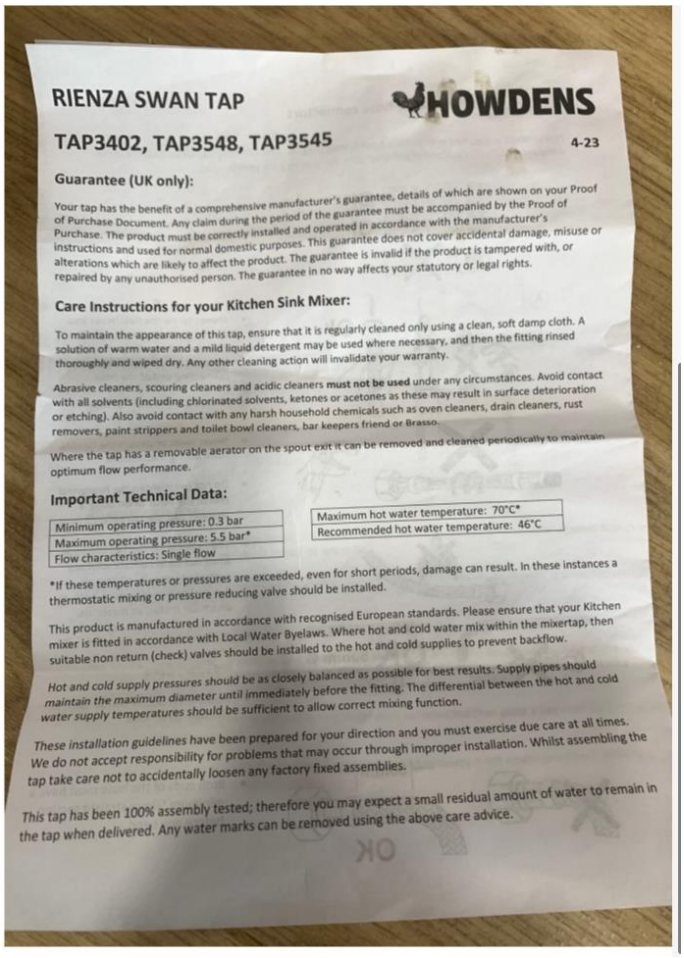

RIENZA SWAN TAP

HOWDENS

TAP3402, TAP3548, TAP3545

4-23

Guarantee (UK only):

Your tap has the benefit of a comprehensive manufacturer's guarantee, details of which are shown on your Proof of Purchase Document. Any claim during the period of the guarantee must be accompanied by the Proof of Purchase. The product must be correctly installed and operated in accordance with the manufacturer's instructions and used for normal domestic purposes. This guarantee does not cover accidental damage, misuse or alterations which are likely to affect the product. The guarantee is invalid if the product is tampered with, or repaired by any unauthorised person. The guarantee in no way affects your statutory or legal rights.

Care Instructions for your Kitchen Sink Mixer:

To maintain the appearance of this tap, ensure that it is regularly cleaned only using a clean, soft damp cloth. A solution of warm water and a mild liquid detergent may be used where necessary, and then the fitting rinsed thoroughly and wiped dry. Any other cleaning action will invalidate your warranty.

Abrasive cleaners, scouring cleaners and acidic cleaners **must not be used** under any circumstances. Avoid contact with all solvents (including chlorinated solvents, ketones or acetones as these may result in surface deterioration or etching). Also avoid contact with any harsh household chemicals such as oven cleaners, drain cleaners, rust removers, paint strippers and toilet bowl cleaners, bar keepers friend or Brasso.

Where the tap has a removable aerator on the spout exit it can be removed and cleaned periodically to maintain optimum flow performance.

Important Technical Data:

Minimum operating pressure: 0.3 bar	Maximum hot water temperature: 70°C*
Maximum operating pressure: 5.5 bar*	Recommended hot water temperature: 46°C
Flow characteristics: Single flow	

*If these temperatures or pressures are exceeded, even for short periods, damage can result. In these instances a thermostatic mixing or pressure reducing valve should be installed.

This product is manufactured in accordance with recognised European standards. Please ensure that your Kitchen mixer is fitted in accordance with Local Water Byelaws. Where hot and cold water mix within the mixertap, then suitable non return (check) valves should be installed to the hot and cold supplies to prevent backflow.

Hot and cold supply pressures should be as closely balanced as possible for best results. Supply pipes should maintain the maximum diameter until immediately before the fitting. The differential between the hot and cold water supply temperatures should be sufficient to allow correct mixing function.

These installation guidelines have been prepared for your direction and you must exercise due care at all times. We do not accept responsibility for problems that may occur through improper installation. Whilst assembling the tap take care not to accidentally loosen any factory fixed assemblies.

This tap has been 100% assembly tested; therefore you may expect a small residual amount of water to remain in the tap when delivered. Any water marks can be removed using the above care advice.

FITZROY OF LONDON

Premium rimless close coupled Doc M toilet pack

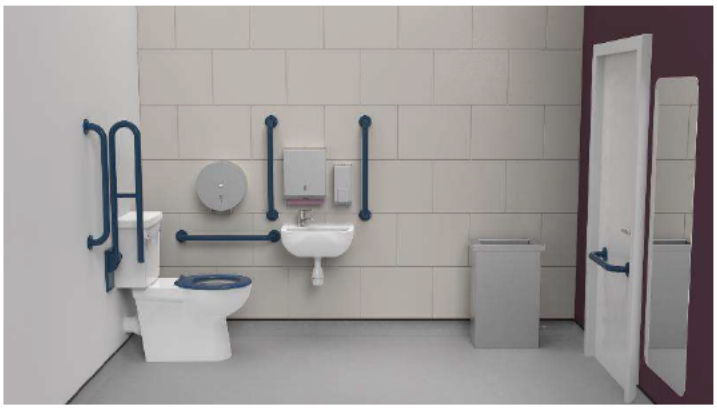

Product details

Warranty:	See individual products
Max load:	See individual products
Doc M compliant:	Yes
Suitable for wet areas:	Yes

Features

- Complies with Part M of the Building Regulations
- Inlet valve and syphon Reg 4 Certified (WRAS, NSF, Kiwa, etc.)
- Premium rimless pan
- Lockable cistern lid
- Concealed fixing stainless steel grab rails
- Concealed fixing stainless steel hinged rail
- Simple one box solution
- Optional TMV3 valve

Finish options

Powder Coated



DB
Dark Blue (RAL 5011)



DG
Dark Grey (RAL 7016)



GY
Grey (RAL 7005)



WH
White (RAL 9016)

Mechanical



SP
Polished Stainless Steel

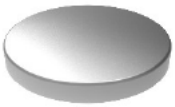

SS
Satin Stainless Steel

Product description	Product code
Premium rimless left-handed close coupled Doc M toilet pack, stainless, concealed fixings	NY02-DM-13001-**
Premium rimless right-handed close coupled Doc M toilet pack, stainless, concealed fixings	NY02-DM-13002-**
Premium rimless left-handed close coupled Doc M toilet pack, stainless, concealed fixings, TMV3 valve	NY02-DM-13101-**
Premium rimless right-handed close couple Doc M toilet pack, stainless, concealed fixings, TMV3 valve	NY02-DM-13102-**
Premium rimless left-handed close couple Doc M toilet pack, stainless, concealed fixings, TMV3 tap	NY02-DM-13201-**
Premium rimless right-handed close couple Doc M toilet pack, stainless, concealed fixings, TMV3 tap	NY02-DM-13202-**

Replace ** with 2-character code for chosen finish (Powder Coated / Mechanical).
e.g., NY02-DM-13001-DB

Need some product advice? Contact our team of product specialists
+44(0)1642 710 719 | sales@fitzroyoflondon.com
www.fitzroyoflondon.com

FITZROY OF LONDON

Pack contents

- 4 x 600mm stainless steel grab rails with concealed fixings
- 1 x 450mm stainless steel grab rail with concealed fixings
- 1 x 800mm stainless steel hinged support rail with concealed fixings
- 1 x Close coupled premium rimless Doc M pan
- 1 x Close coupled cistern with lockable lid
- 1 x Close coupled cistern fitting pack with basin waste and Doc M spatula lever
- 1 x Ring only toilet seat
- 1 x One tap hole basin (either left or right hand)
- 1 x Sequential basin mixer tap (optional thermostatic mixer tap - NY02-DM-1320x-** only)
- 1 x TMV3 Valve (NY02-DM-1310x-** only)

Dimensions (mm)

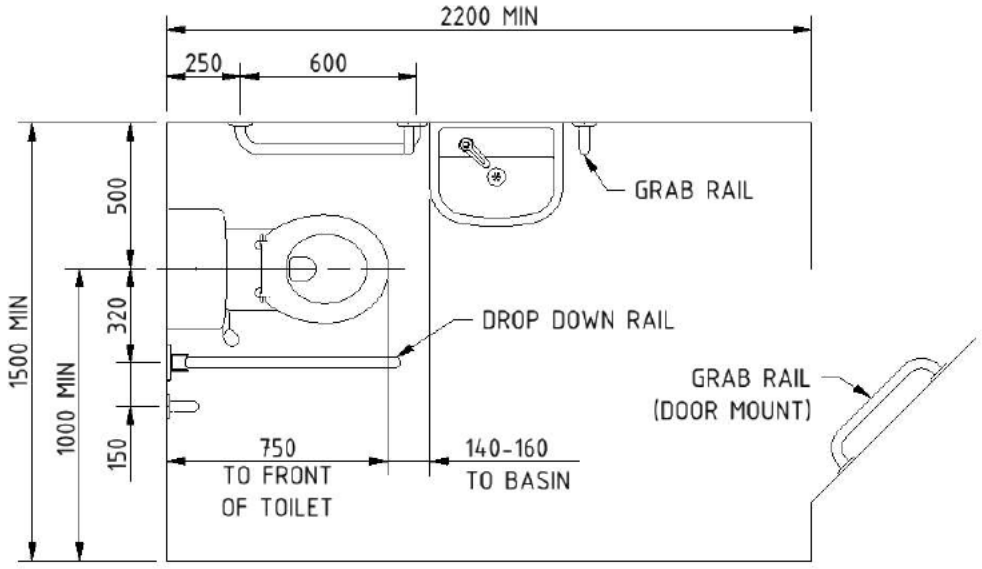

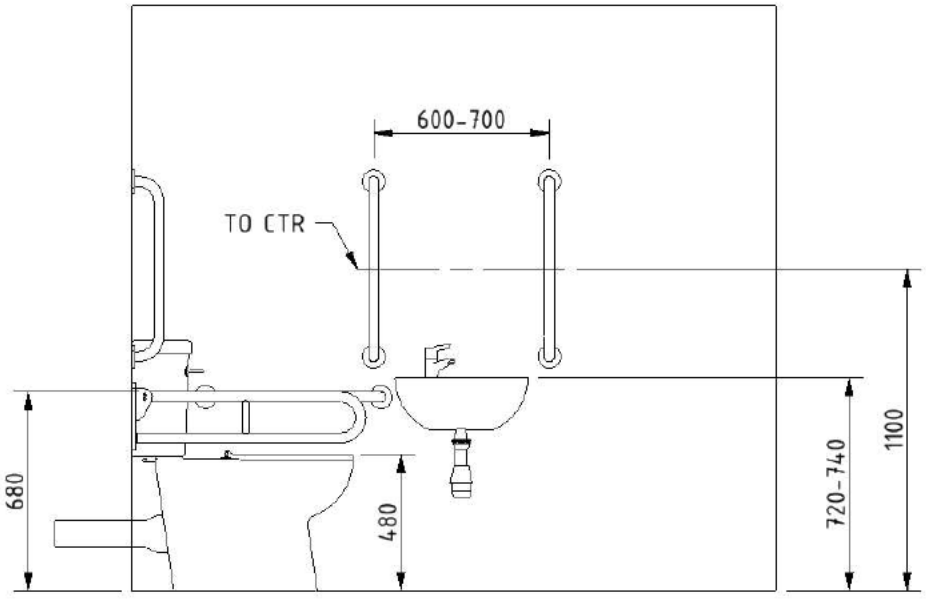

Fitzroy of London may occasionally need to change specification of products and/or kit contents and reserves the right to do so.
We strive to keep our documentation up to date; however, we cannot guarantee this. We accept no liability for any information given on this data sheet.

FITZROY OF LONDON

Premium rimless close coupled Doc M pan



Product details

Warranty:	Lifetime
Max load:	400kg
Doc M compliant:	Yes
Suitable for wet areas:	Yes

Features

- Rimless design for ease of cleaning
- Extended projection to aid compliance with Part M of the Building Regulations
- UKCA and CE compliant
- Comfort height to allow easier side transfer from wheelchair

Finish options



WH
White

Product description	Product code
Premium rimless close coupled Doc M pan	NY02-SW-13000-WH

Need some product advice? Contact our team of product specialists
+44(0)1642 710 719 | sales@fitzroyoflondon.com
www.fitzroyoflondon.com

FITZROY OF LONDON

Dimensions (mm)

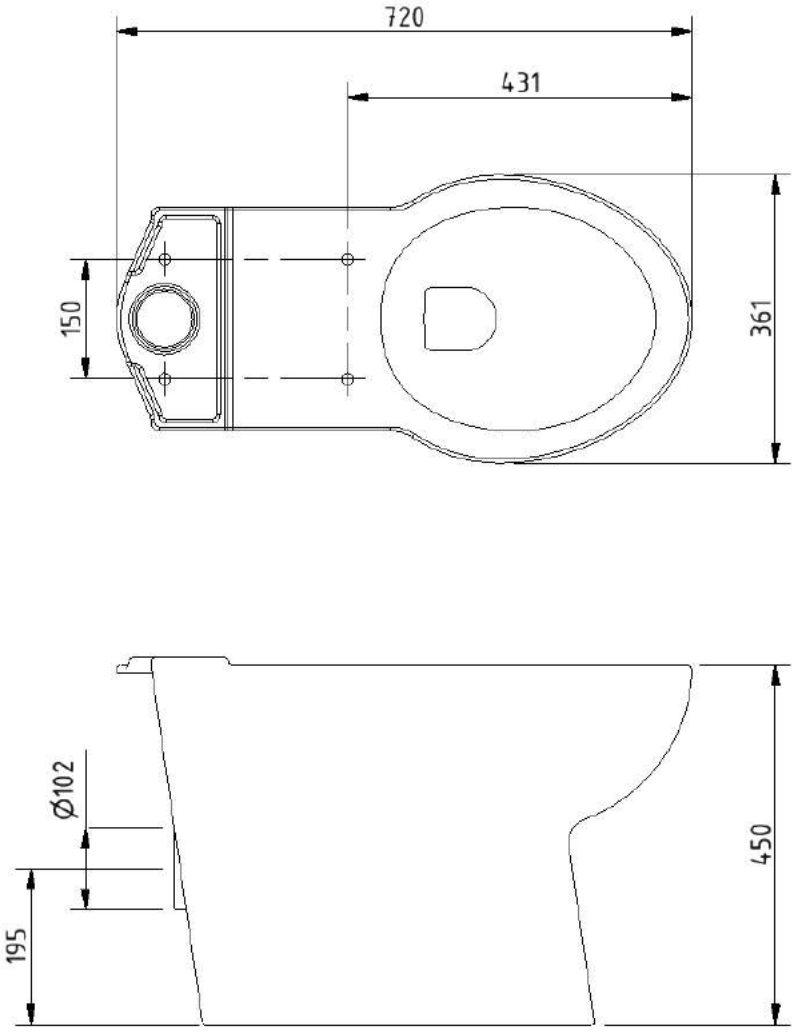

Fitzroy of London may occasionally need to change specification of products and/or kit contents and reserves the right to do so.
We strive to keep our documentation up to date; however, we cannot guarantee this. We accept no liability for any information given on this data sheet.

FITZROY OF LONDON

Close coupled cistern with lockable lid for premium rimless Doc M pan



Product details

Warranty:	Lifetime
Max load:	N/A
Doc M compliant:	Yes
Suitable for wet areas:	Yes

Features

- Complies with Part M of the Building Regulations
- UKCA & CE compliant
- Suitable for front lever
- Bottom inlet
- Universal - either left or right handed
- Lockable lid

Finish options



WH
White

Product description	Product code
Close coupled cistern with lockable lid for premium rimless Doc M pan	NY02-SW-21090-WH

Need some product advice? Contact our team of product specialists
+44(0)1642 710 719 | sales@fitzroyoflondon.com
www.fitzroyoflondon.com

FITZROY OF LONDON

Dimensions (mm)

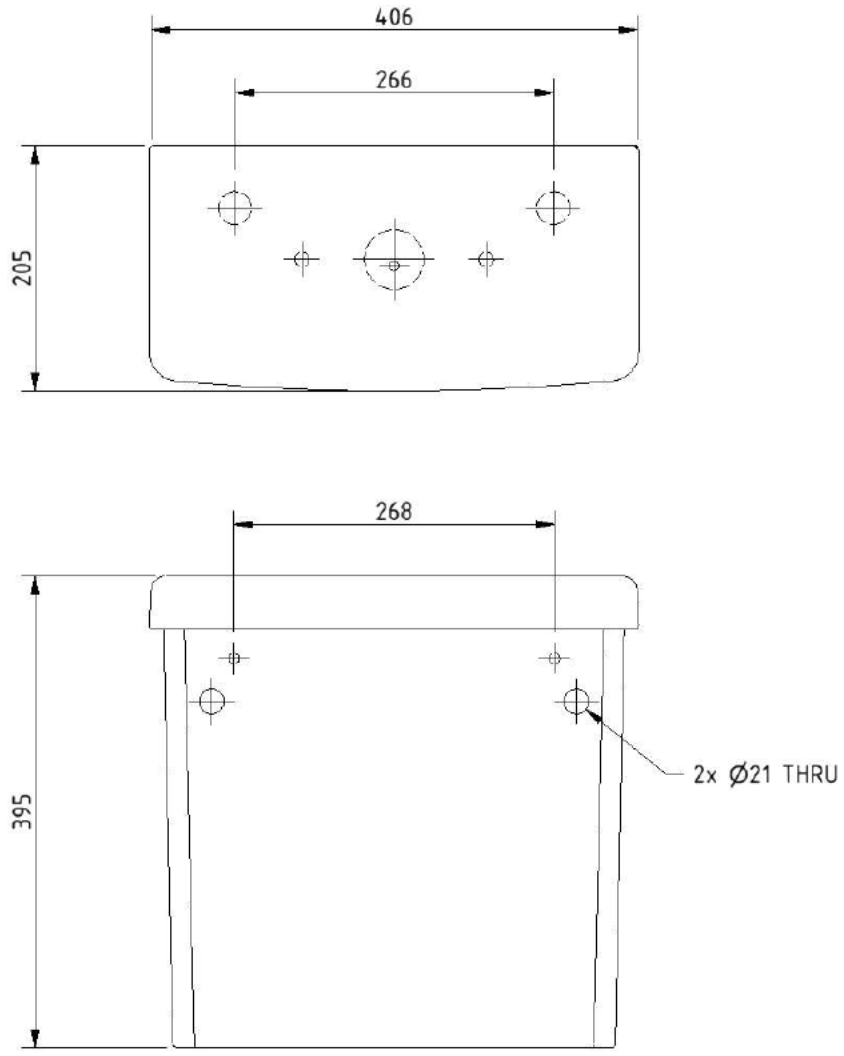

Fitzroy of London may occasionally need to change specification of products and/or kit contents and reserves the right to do so.
We strive to keep our documentation up to date; however, we cannot guarantee this. We accept no liability for any information given on this data sheet.

FITZROY OF LONDON

Toilet seat, ring only, stainless steel pillar hinge



Product details

Warranty:	2 years
Max load:	150 kg
Doc M compliant:	Yes
Sultable for wet areas:	Yes

Features

- Complies with Part M of the Building Regulations
- Anti-bacterial, strong and durable Duroplast seat
- Ergonomic and comfortable shape
- Stainless steel hinge (bottom fix as standard) Additional hinge pack to convert to top fix: NY-TOPFIXHINGE
- Adjustable locating buffers
- Fits close coupled, low level, back to wall and wall hung pans

Finish options



Product description	Product code
Toilet seat, ring only, stainless steel pillar hinge	260015/**

Replace ** with 2-character short code for chosen finish.
e.g., 260015/DB

Need some product advice? Contact our team of product specialists
+44(0)1642 710 719 | sales@fitzroyoflondon.com
www.fitzroyoflondon.com

FITZROY OF LONDON

Dimensions (mm)

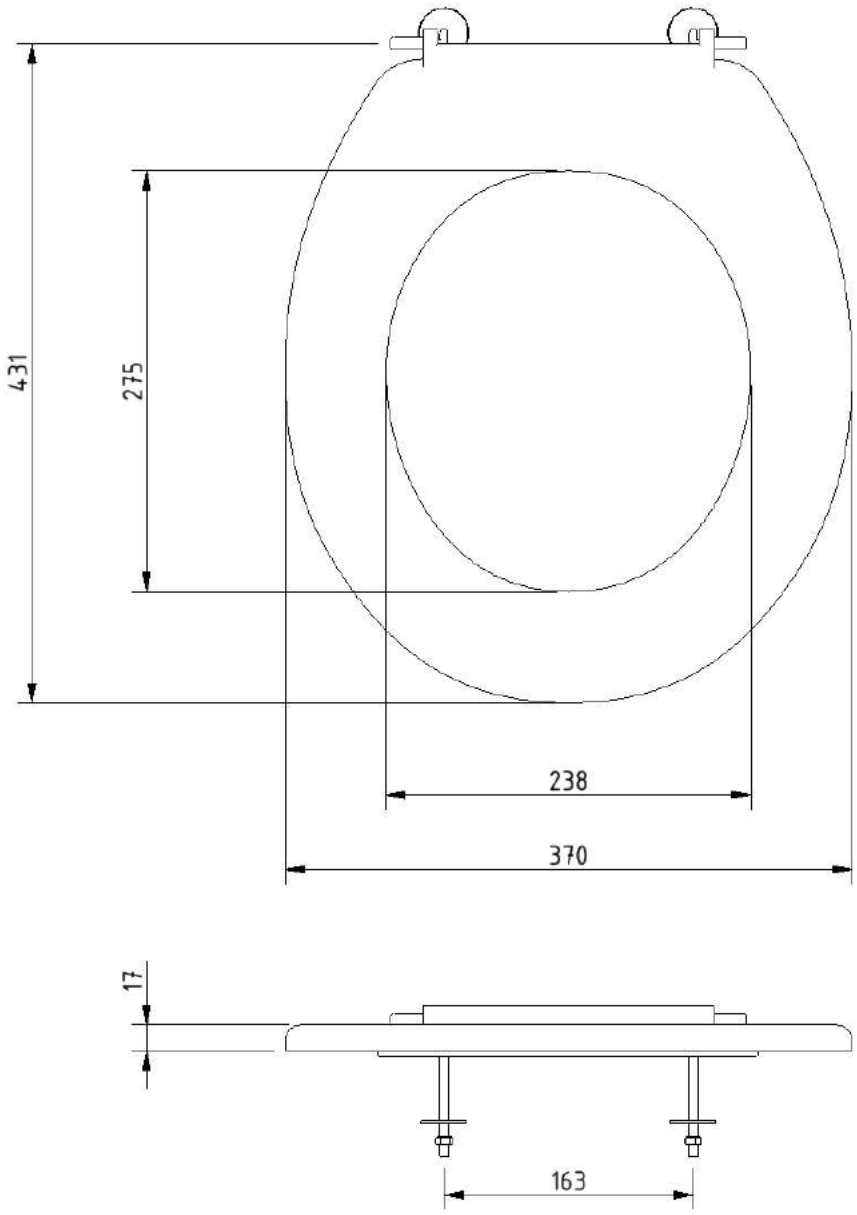

Fitzroy of London may occasionally need to change specification of products and/or kit contents and reserves the right to do so.
We strive to keep our documentation up to date; however, we cannot guarantee this. We accept no liability for any information given on this data sheet.

FITZROY OF LONDON

Top fix toilet seat hinge



Product details

Warranty:	2 years
Max load:	N/A
Doc M compliant:	N/A
Suitable for wet areas:	Yes

Features

- Toilet seat hinge for use with premium rimless sanitary ware

Product description	Product code
Top fix toilet seat hinge	NY-TOPFIXHINGE

Need some product advice? Contact our team of product specialists
+44(0)1642 710 719 | sales@fitzroyoflondon.com
www.fitzroyoflondon.com

FITZROY OF LONDON

Dimensions (mm)

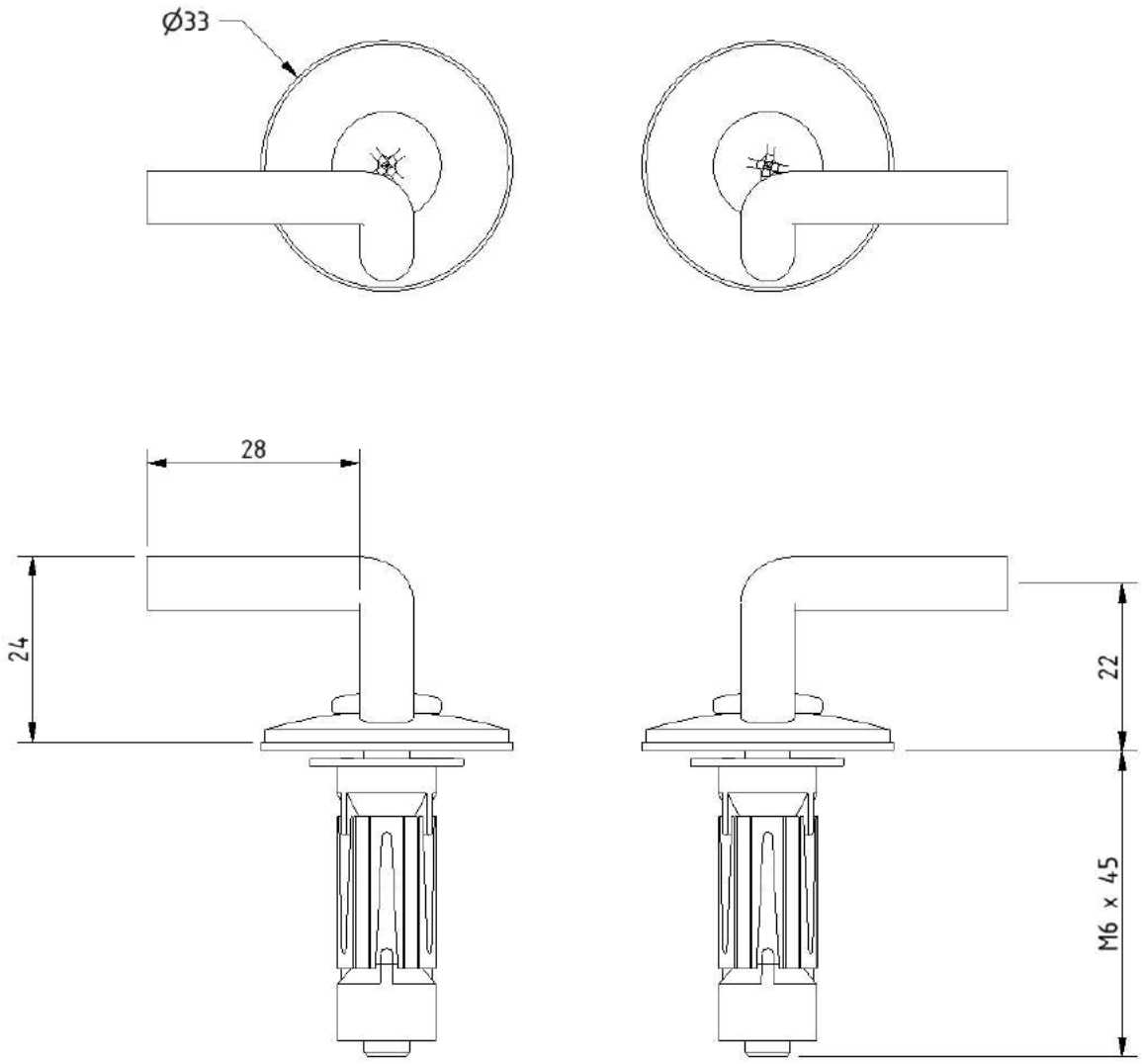

Fitzroy of London may occasionally need to change specification of products and/or kit contents and reserves the right to do so.
We strive to keep our documentation up to date; however, we cannot guarantee this. We accept no liability for any information given on this data sheet.

FITZROY OF LONDON

Premium Doc M basin



Product details

Warranty:	Lifetime
Max load:	N/A
Doc M compliant:	Yes
Suitable for wet areas:	Yes

Features

- Multiple tap hole configurations available removing the need for blanking caps
- Complies with Part M of the Building Regulations
- No overflow

Does **NOT** come with wall fixings (P-000247-X00X)

Finish options



WH
White

Product description	Product code
Premium Doc M basin, two tap holes, no overflow, white	NY02-SW-00100-WH
Premium Doc M basin, left handed tap hole, no overflow, white	NY02-SW-00101-WH
Premium Doc M basin, right handed tap hole, no overflow, white	NY02-SW-00102-WH
Premium Doc M basin, central tap hole, no overflow, white	NY02-SW-00103-WH

Need some product advice? Contact our team of product specialists
+44(0)1642 710 719 | sales@fitzroyoflondon.com
www.fitzroyoflondon.com

FITZROY OF LONDON

Dimensions (mm)

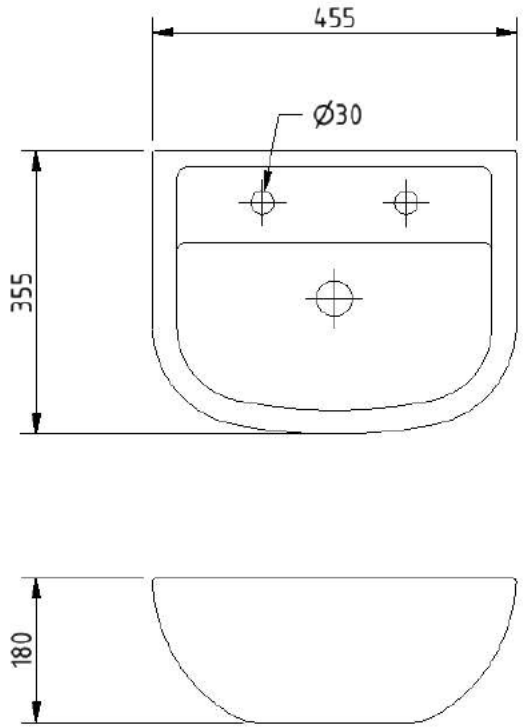

FOR TAP HOLE POSITION DIMENSIONS SEE PRODUCT SPECIFIC MARKETING DRAWING

Fitzroy of London may occasionally need to change specification of products and/or kit contents and reserves the right to do so.
We strive to keep our documentation up to date; however, we cannot guarantee this. We accept no liability for any information given on this data sheet.

FITZROY OF LONDON

Polished chrome sequential basin mixer tap



Product details

Warranty:	2 years
Max load:	N/A
Doc M compliant:	Yes
Suitable for wet areas:	Yes
Flexi tap tail connection (to tap body):	M10 thread
Flexi tap tail (onward connection):	½ inch BSP

Features

- Reg 4 certified (WRAS, NSF, Kiwa, etc.)
- Easy operation for users with limited dexterity
- Cold start

Finish options



CP
Polished Chrome

Product description	Product code
Sequential basin mixer tap, polished chrome	BPLMON

Need some product advice? Contact our team of product specialists
+44(0)1642 710 719 | sales@fitzroyoflondon.com
www.fitzroyoflondon.com

FITZROY OF LONDON

Dimensions (mm)

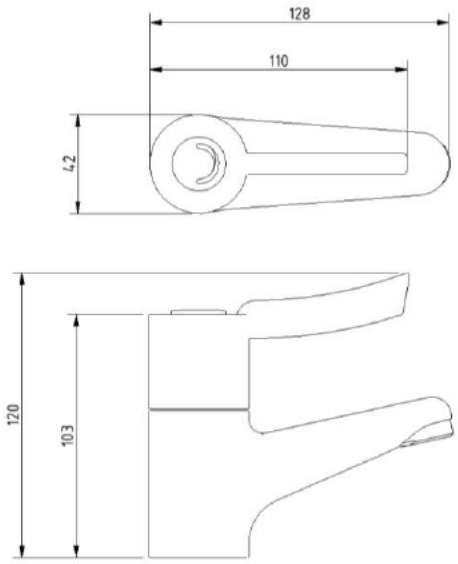

FLOW RATE CURVE

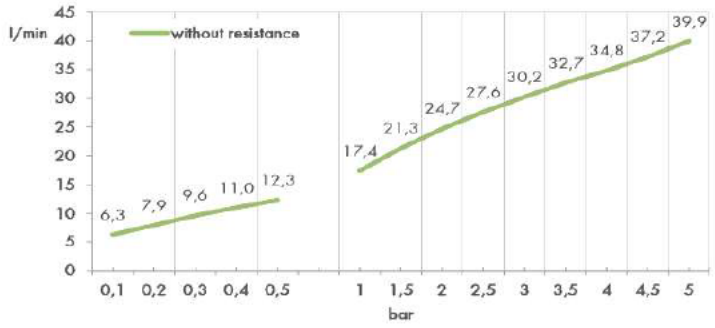

FLOW RATE & HYSTERESIS CURVES

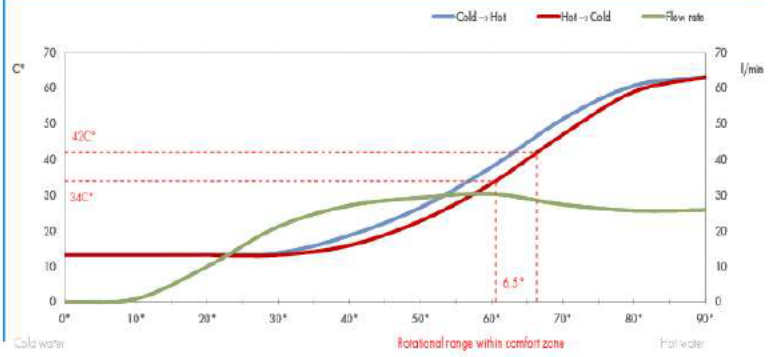

Fitzroy of London may occasionally need to change specification of products and/or kit contents and reserves the right to do so.
We strive to keep our documentation up to date; however, we cannot guarantee this. We accept no liability for any information given on this data sheet.

FITZROY OF LONDON

Basin waste with stainless steel grid



Product details

Warranty:	2 years
Max load:	N/A
Doc M compliant:	Yes
Suitable for wet areas:	Yes

Features

- Slotted type for use with basins without overflow
- Manufactured from high quality materials
- Quick and simple installation

Product description	Product code
Basin waste, plastic body, white, stainless grid, unslotted, 1-1/4" BSP thread	P-000245-X00X

Dimensions (mm)

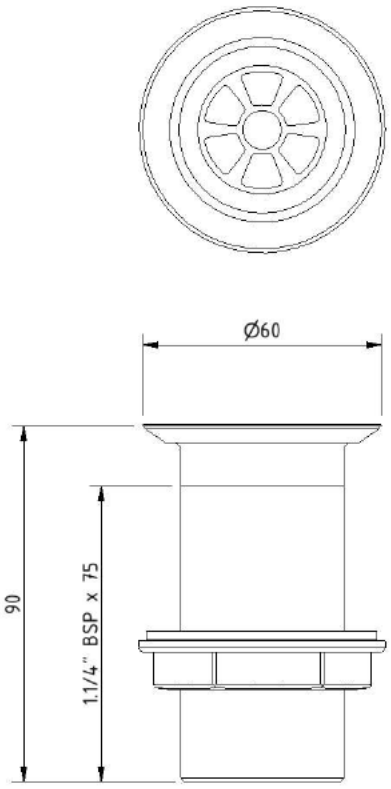

Fitzroy of London may occasionally need to change specification of products and/or kit contents and reserves the right to do so.
We strive to keep our documentation up to date; however, we cannot guarantee this. We accept no liability for any information given on this data sheet.

Need some product advice? Contact our team of product specialists
+44(0)1642 710 719 | sales@fitzroyoflondon.com
www.fitzroyoflondon.com

FITZROY OF LONDON

Stainless steel grab rail with concealed fixings, 35mm diameter tube



Product details

Warranty:	5 Years
Max load:	185 kg
Doc M compliant:	Yes
Suitable for wet areas:	Yes

Features

- Stainless steel construction
- Durable powder coated finish
- Concealed fixing

Finish options

Powder coated



WH
White (RAL 9016)

DB
Dark Blue (RAL 5011)

DG
Dark Grey (RAL 7016)

GY
Grey (RAL 7006)

Product description	Product code
Grab rail, stainless steel, concealed fixings, 35mm diameter, 300mm	210130/**
Grab rail, stainless steel, concealed fixings, 35mm diameter, 450mm	210145/**
Grab rail, stainless steel, concealed fixings, 35mm diameter, 600mm	210160/**
Grab rail, stainless steel, concealed fixings, 35mm diameter, 900mm	210190/**

Replace ** with 2-character short code for chosen finish.
e.g., 210130/WH

Need some product advice? Contact our team of product specialists
+44(0)1642 710 719 | sales@fitzroyoflondon.com
www.fitzroyoflondon.com

FITZROY OF LONDON

Dimensions (mm)

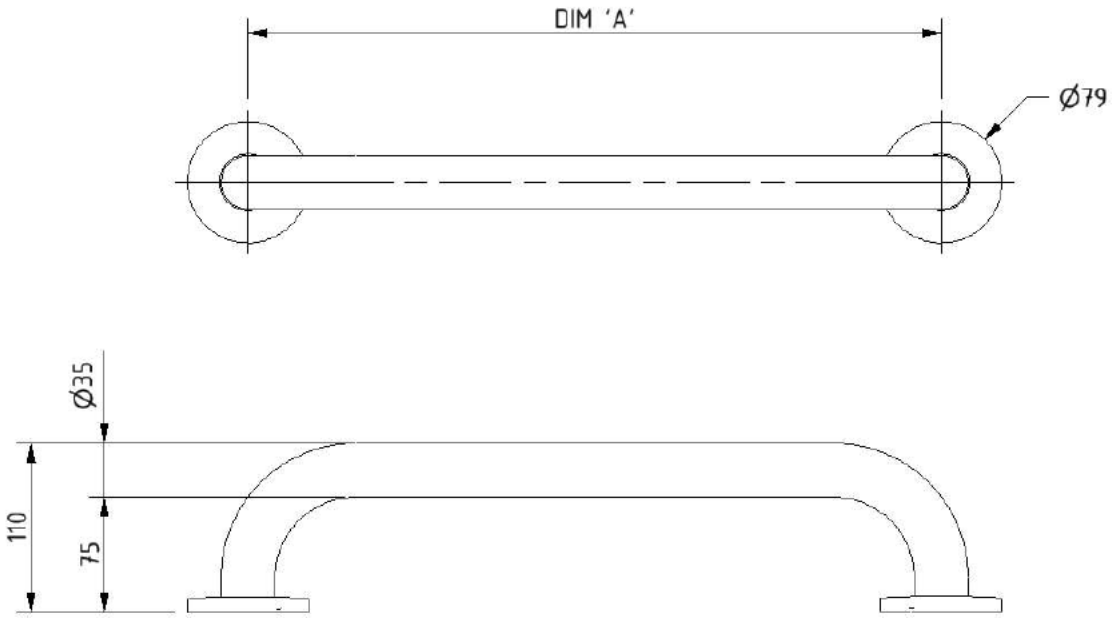

PRODUCT CODE	210130/**	210145/**	210160/**	210190/**
DIM 'A'	300	450	600	900

Fitzroy of London may occasionally need to change specification of products and/or kit contents and reserves the right to do so.
We strive to keep our documentation up to date; however, we cannot guarantee this. We accept no liability for any information given on this data sheet.

FITZROY OF LONDON

Stainless steel friction hinged support rail with concealed fixings, 800mm

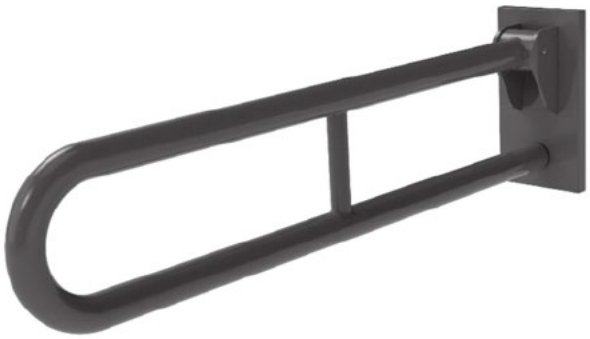

Product details

Warranty:	5 years
Max load:	120 kg
Doc M compliant:	Yes
Suitable for wet areas:	Yes

Features

- Complies with Part M of the Building Regulations
- Premium friction folding mechanism
- Stainless steel construction
- Concealed wall fixings

Finish options

Powder Coated



DB
Dark Blue (RAL 5011)



DG
Dark Grey (RAL 7016)



GY
Grey (RAL 7005)



WH
White (RAL 9016)

Mechanical



SP
Polished Stainless Steel



SS
Satin Stainless Steel

Product description	Product code
Friction hinged rail, stainless steel, concealed fixing, 800mm	105SC-**

Replace ** with 2-character short code for chosen finish (Powder Coated / Mechanical).
e.g., 105SC/DB

Need some product advice? Contact our team of product specialists
+44(0)1642 710 719 | sales@fitzroyoflondon.com
www.fitzroyoflondon.com

FITZROY OF LONDON

Dimensions (mm)

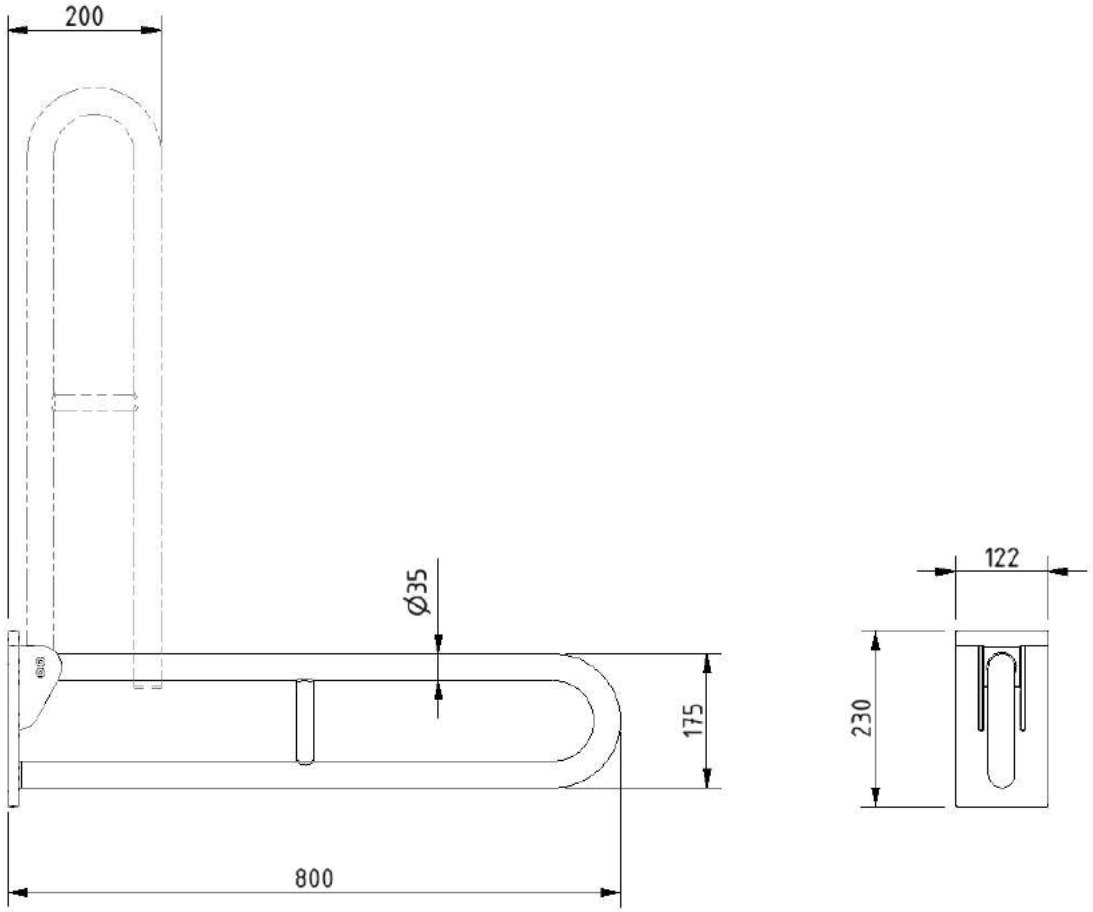

Fitzroy of London may occasionally need to change specification of products and/or kit contents and reserves the right to do so.
We strive to keep our documentation up to date; however, we cannot guarantee this. We accept no liability for any information given on this data sheet.

FITZROY OF LONDON

TMV3 inline thermostatic mixing valve



Product details

Warranty:	2 years
Max load:	N/A
Doc M compliant:	Yes
Suitable for wet areas:	Yes

Features

- TMV3 approved & Reg 4 Certified (WRAS, NSF, Kiwa, etc.)
- Complies with Part M of the Building Regulations
- Building Regulations Part G compliant
- Highly resistant to scaling
- Anti-tamper proof head
- Complies with HTM04-01 D08
- TMV2 approved & complies with BS EN 1111 & BS EN 1287:2017
- Integral check valves & strainers

Finish options



CP
Polished Chrome

Product description	Product code
TMV3 inline thermostatic mixing valve - 15mm	BPLTMV

Need some product advice? Contact our team of product specialists
+44(0)1642 710 719 | sales@fitzroyoflondon.com
www.fitzroyoflondon.com

FITZROY OF LONDON

Dimensions (mm)

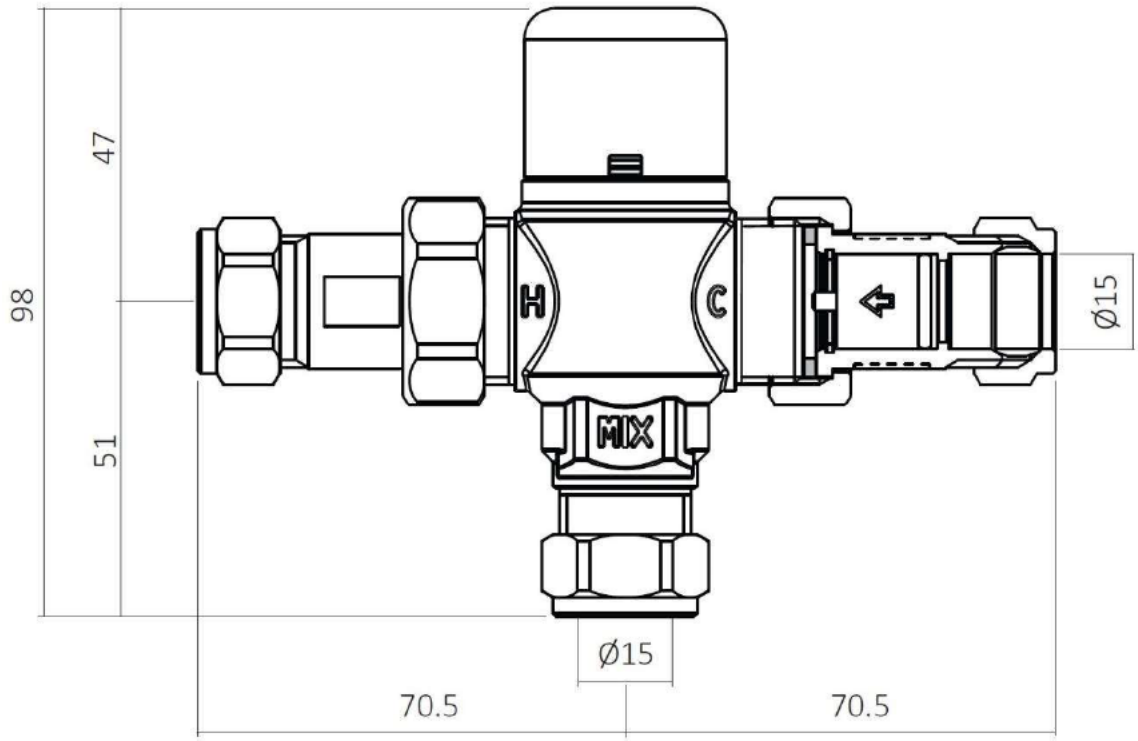

Fitzroy of London may occasionally need to change specification of products and/or kit contents and reserves the right to do so.
We strive to keep our documentation up to date; however, we cannot guarantee this. We accept no liability for any information given on this data sheet.

The 4 steps of surgical hand disinfection

To ensure that all germs are effectively inactivated, the procedure for surgical hand disinfection is precisely prescribed. Surgeons, doctors, and assisting staff must adhere to the following steps.

1. **Wash hands:** 10 minutes before the first hand disinfection procedure on operation day, thoroughly and carefully wash and dry the hands and forearms (if several operations are performed in a day, this step must only be done once as long as the hands do not get dirty).
2. **Wet hands and forearms with disinfectant:** Operate the dispenser lever with the elbow and wet both hands and forearms with sufficient hand disinfectant.
3. **Rub hands and forearms with disinfectant:** Then rub the hands and forearms and keep them moist for the entire exposure time of 1.5 minutes. If necessary, add more hand disinfectant.
4. **Drying:** Allow the hands and forearms to air dry before putting on the surgical gloves.

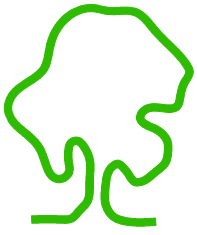

eas ltd
Environmental Assessment Services Ltd
Unit 4B, The Courtyard, Holmsted Farm, Staplefield Road, Cuckfield,
West Sussex, RH17 5JT
Phone : +44 (0) 1444 882552 email : info@easltd.co.uk
web site : www.easltd.co.uk