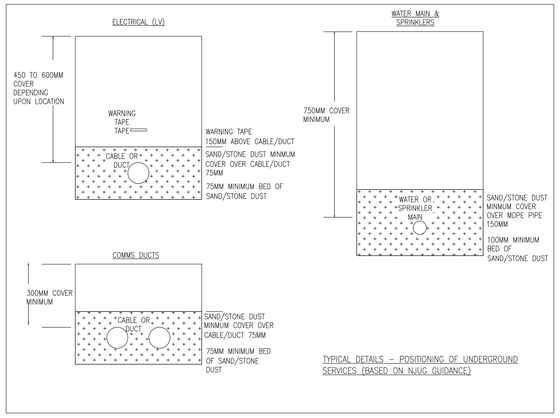

TYPICAL DETAILS – POSITIONING OF UNDERGROUND SERVICES (BASED ON NJUG GUIDANCE)

LEGEND M&E

- UTILITY WATER SERVICE
- UKPN EXISTING CABLE
- UKPN NEW CABLE
- LV DUCT FOR UKPN NEW CABLE
- UTILITY GAS SERVICE
- CAT 5 BOOSTED WATER
- WATER
- LV POWER
- SECONDARY LIGHTING/LV POWER
- BT COMMS DUCT (TO BT SPEC)
- IT COMMS DUCT
- FIRE ALARM
- CABLE DRAW PIT GENERALLY ALLOW 450x450mm COMMS/FIRE AND 600x600mm LV

LEGEND DRAINAGE

- PROPOSED BELOW GROUND DRAINAGE SYSTEMS

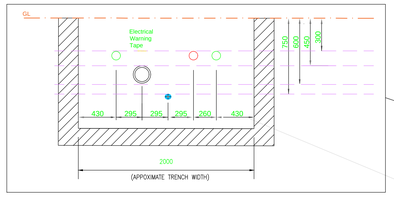

NJUG GUIDELINES ON THE POSITIONING OF UNDERGROUND APPARATUS FOR NEW DEVELOPMENT SITES

RECOMMENDED POSITIONING OF UTILITY APPARATUS IN A 2m FOOTWAY

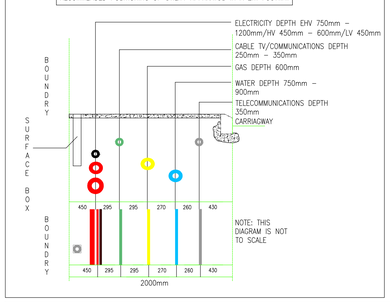

NOTE: THIS DIAGRAM IS NOT TO SCALE

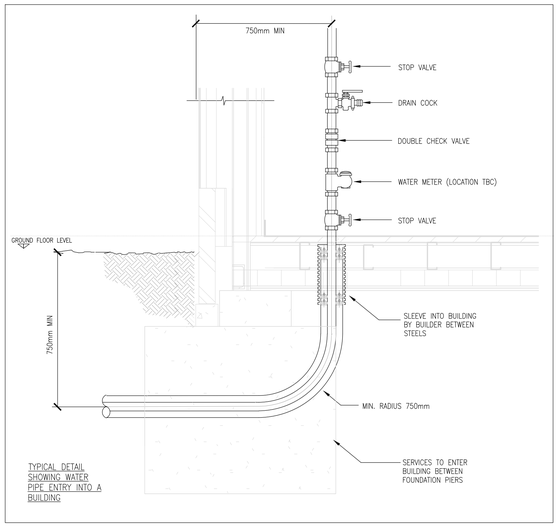

TYPICAL DETAIL SHOWING WATER PIPE ENTRY INTO A BUILDING

DIALux EXTERNAL LIGHTING
Greenway Academy

	X1	ANSELL – Onix LED Street Light (40W) – 6 Meter Column
	X2	ANSELL AVILED/HP/GR AMENITY – Vision 3 LED Graphite (WITH INTEGRAL 3 HOUR EMERGENCY CONVERSION)

NEW BUILD DOUBLE STOREY MODULAR BLOCK

RETAINED BUILDING FFL 43.700

EXISTING OFFICE

NEW PROPOSED UNDERGROUND DUCT ROUTES:
- 100mmø COMMS DUCT*
- 90mmø BT DUCT (TO BT SPEC)
- 32mmø MDPE MCW (BARRIER PIPEWORK)
- 100mmø FIRE ALARM DUCT
- 200mmø LV POWER DUCT
- 100mmø COMMS DUCT*

*COMMS DUCT 1 AND 2 TO BE SPACED 1M APART MIN. TO ACHIEVE DIVERSE ROUTING

NEW PROPOSED UNDERGROUND DUCT ROUTES TO EXISTING NURSERY:
- 90mmø BT DUCT (TO BT SPEC)
- 32mmø MDPE MCW (BARRIER PIPEWORK)
- 100mmø FIRE ALARM/ELV DUCT
- 200mmø LV POWER DUCT

NEW PROPOSED UNDERGROUND DUCT ROUTES TO EXISTING EFAF BLOCK:
- 100mmø COMMS DUCT*
- 32mmø MDPE MCW (BARRIER PIPEWORK)
- 100mmø FIRE ALARM DUCT
- 200mmø LV POWER DUCT
- 100mmø COMMS DUCT*

*COMMS DUCT 1 AND 2 TO BE SPACED 1M APART MIN. TO ACHIEVE DIVERSE ROUTING

NEW PROPOSED UNDERGROUND DUCT ROUTES:
- UKPN CABLE (DIRECT IN GROUND)
- 100mmø LV POWER DUCT
- 100mmø COMMS DUCT
- 25mmø MDPE CAT 5 (BARRIER PIPEWORK)

NEW PROPOSED UNDERGROUND DUCT ROUTES:
- UKPN CABLE (IN 200mmø DUCT)
- 100mmø LV POWER DUCT
- 100mmø COMMS DUCT
- 25mmø MDPE CAT 5 (BARRIER PIPEWORK)

NEW PROPOSED UNDERGROUND DUCT ROUTES:
- 100mmø LV POWER DUCT
- 100mmø COMMS DUCT

EXTERNAL CANOPY WITH PV

OUT OF SCOPE

EXISTING OVERHEAD CABLES TO NURSERY BUILDING TO BE STRIPPED OUT AFTER NEW SUPPLY CHANGEOVER HAS OCCURRED

PV INVERTER LOCATION TO BE CONFIRMED WITH SPECIALIST (ALLOW FOR GRP ENCLOSURE)

EXISTING MCB DISTRIBUTION BOARD FEEDING THE NURSERY BUILDING (IN CENTRAL CUPBOARD) – TO BE REFED BY NEW BUILDING MAIN PANELBOARD

NOTE: EXISTING DB BOARD IS BEYOND RECOMMENDED SERVICE LIFE WITH SOME SPARE WAYS BLOCKED OFF WITH TAPE WE RECOMMEND DB SHOULD BE REPLACED WITH NEW.

NOTE 2: EXISTING NURSERY BUILDING HAS NO EMERGENCY LIGHTING SYSTEMS IN PLACE AND STAND ALONE DOMESTIC STYLE FIRE ALARM SYSTEM, RECOMMEND THESE REPLACED/UPGRADED.

FINAL WATER CONNECTIONS TO EXISTING BUILDING TO BE DETERMINED THROUGH INVASIVE SURVEY ON SITE BY SERVICES CONTRACTOR

INTERCOM FOR ACCESS CONTROLLED GATES AS EXISTING (ALLOW FOR NEW CABLE LINK ONLY)

EXISTING MCB DISTRIBUTION BOARD FEEDING THE EFAF BUILDING (IN CENTRAL CUPBOARD) – TO BE REFED BY NEW BUILDING MAIN PANELBOARD

FINAL WATER CONNECTIONS TO EXISTING BUILDING TO BE DETERMINED THROUGH INVASIVE SURVEY ON SITE BY SERVICES CONTRACTOR

EXISTING MAIN ELECTRICAL PANELBOARD (PB1) – 400A TPN MCCB BOARD SERVING ALL AREAS OF EXISTING SCHOOL SITE

EXISTING ELECTRICAL ENCLOSURE (ASSUMED TO HOLD DNO CUT OUT AND METER)

NEW PROPOSED UNDERGROUND DUCT ROUTES:
- 100mmø LV POWER DUCT
- 100mmø COMMS DUCT

INCOMING ELECTRICAL NOTE:

APPLICATION HAS BEEN MADE TO UKPN FOR PHASED CONNECTIONS TO NEW BUILDING AND SITE CABINS. FINAL PHASE OF UKPN WORKS WILL DISCONNECT EXISTING MAIN BUILDING SUPPLY. UKPN CABLE ROUTES SHOWN BASED ON UKPN APPLICATION – CONTACT REDS10/JKP FOR FURTHER DETAILS

EXISTING MECHANICAL SERVICES

THE EXISTING SERVICES FOR THE RETAINED OR REDUNDANT BUILDINGS SHALL BE DISCONNECTED AND SAFELY ISOLATED FROM THE UTILITY NETWORK. THE RESULTANT SYSTEMS SHALL BE EITHER REMOVED OR ABANDONED.

ALL REMAINING WATER SERVICES SHALL BE FULLY DRAINED.

EXISTING ACCESS CONTROLLED GATEWAYS TO BE RETAINED, NEW CABLE LINK BACK TO NEW BLOCK INTERCOM (LOCATED IN RECEPTION OFFICE) AND NEW CABLE LINK TO EXISTING NURSERY INTERCOM TO BE PROVIDED

EXISTING SUBSTATION WITH LV SUPPLY TO SCHOOL

ASSUMED ROUTE OF EXISTING MAINS WATER SUPPLY TO SCHOOL

ASSUMED ROUTE OF EXISTING GAS SUPPLY TO SCHOOL

ACCESS CONTROLLED GATEWAYS WITH FOLLOWING CONFIGURATION (TBC):
NON SECURE SIDE;
- CARD READER IN

SECURE SIDE;
- CARD READER OUT
- EMERGENCY GREEN BREAK GLASS

INTERCOM FOR ACCESS CONTROLLED GATES

ALLOW FOR THE FOLLOWING NEW DATA EQUIPMENT WITHIN EXISTING EFAF BLOCK:
- 1x 9U WALL MOUNTED DATA CABINET (IN OFFICE/INCOMING SERVICES POSITION
- 20x DATA OUTLETS AND ASSOCIATED CAT 6A CABLING (PLUS 1x EXTERNAL WIFI POINT)

COORDINATION BETWEEN ATTENUATION TANK/DRAINAGE AND SERVICES TRENCH REQUIRED (FINAL LOCATIONS TBC)

NEW 32ø MAINS COLD WATER BRANCH TO EXISTING BUILDINGS (Barrier Pipe)

NEW 63ø MAINS COLD WATER BRANCH TO NEW PLANTROOM (Barrier Pipe)

NEW 25ø CAT5 COLD WATER TO BIN STORE WASH DOWN (Barrier Pipe)

NEW INCOMING SPARE COMMS (100mmø)/2x BT DUCTS (90mmø AS BT SPECIFICATION) PROVIDED TO SITE BOUNDARY

NEW GROUND FLOOR PLANTROOM

NEW 63ø INCOMING MAINS COLD WATER SUPPLY (Barrier Pipe)

NEW WATER METER POINT. FINAL LOCATION TO BE DETERMINED BY AUTHORITY

NEW WATER CONNECTION. FINAL POINT TO BE DETERMINED BY AUTHORITY

UKPN CABLE TO ENTER DUCT TO RUN UNDER PATHWAYS

APPROXIMATE LOCATION OF EXISTING WATER AUTHORITY FIRE HYDRANT (To Be Verified By Local Authority)

150mm VC

FH

APPROXIMATE ROUTE OF EXISTING AUTHORITY MAINS WATER NETWORK

APPROXIMATE ROUTE OF EXISTING AUTHORITY MAINS GAS NETWORK

CAT 5 COLD WATER SUPPLY TO BIN STORE WASH DOWN

DUCT AND PIT FOR POSSIBLE FUTURE ELECTRIC VEHICLE CHARGING

EXISTING SEWER EASEMENT ZONE

PROPOSED ROUTE FOR NEW UKPN CABLE SERVING NEW BUILDING

NEW JOINT TO BE PROVIDED BY UKPN FOR NEW BUILDING (PIT REQUIRED BY CONTRACTOR FOR UKPN TO PROVIDE JOINT)

NEW JOINT TO BE PROVIDED BY UKPN FOR SITE CABINS (PIT REQUIRED BY CONTRACTOR FOR UKPN TO PROVIDE JOINT)

NEW SITE CABIN TBS INDICATIVE LOCATION

CRICKET NETS

NURSERY PLAYGROUND

NURSERY BUILDING

ACCESS ROAD (NURSERY)

(S1)

SORT OUTDOOR PE

HABITAT (S2)

EXISTING PARKING

EXISTING ACCESS

X1

X2E

X4

SHE INFORMATION
Safety Health & Environmental Information

IN ADDITION TO THE HAZARDS & RISKS NORMALLY ASSOCIATED WITH THE TYPE OF BUILDING SERVICES DETAILED ON THIS DRAWING PLEASE NOTE THE FOLLOWING SIGNIFICANT RISKS AND INFORMATION.

RISKS LISTED HERE ARE SIGNIFICANT & ASSOCIATE WITH THE WORKS DETAILED ON THIS DRAWING.

FOR INFORMATION RELATING TO END USE, MAINTENANCE & DEMOLITION PLEASE REFER TO THE O&M MANUAL.

JONES KING PARTNERSHIP'S DIRECTORS, DESIGN TEAMS & EXTERNAL CDM ADVISORS AGREE & CONFIRM THAT ANY RISKS ASSOCIATED WITH THE GENERAL MECHANICAL & ELECTRICAL SERVICES INSTALLATIONS WILL BE ADEQUATELY MITIGATED BY QUALIFIED & COMPETENT SUB-CONTRACTORS & INSTALLERS. THEREFORE ALL WORK SHALL BE CARRIED OUT BY A COMPETENT CONTRACTOR & WHERE APPROPRIATE TO AN APPROVED METHOD STATEMENT.

NOTES

1. SCALED DIMENSIONS MUST NOT BE TAKEN FROM THIS DRAWING.
2. THIS DRAWING MUST BE READ IN CONJUNCTION WITH ALL ARCHITECTS & OTHER CONSULTANTS RELEVANT DRAWINGS, DOCUMENTS & INFORMATION.
3. ANY DISCREPANCY ON THIS DRAWING MUST BE REFERRED TO THE ENGINEER & CLARIFICATION OBTAINED BEFORE COMMENCEMENT OF WORK.
4. ALL DIMENSIONS MUST BE CHECKED ON SITE BEFORE THE COMMENCEMENT OF WORK OR THE PREPARATION OF SPECIALIST DRAWINGS.

Rev	Description	Date
P01	CP ISSUE	21.12.2022
P02	CP ISSUE UPDATE	06.12.2023
P03	CP ISSUE UPDATE (TO AVOID TREE PROTECTION ZONES CLOUDED)	06.02.2024

PRELIMINARY		✓	INFORMATION
TENDER			CONSTRUCTION
CONTRACT ISSUE			SKETCH

Jones King CONSULTING ENGINEERS
Eden Office Park
78 Maccree Road
Hom Green
Bristol, BS20 0DD
T 01179 221681
e office@jonesking.com
www.jonesking.com

Client
REDS10

Project
GREENWAY ACADEMY
HORSHAM

Title
MECHANICAL & ELECTRICAL
COMBINED SITE SERVICES

PROJECT	ORIGIN.	VOLUME	LEVEL	TYPE	DISCIPL.	DESCR.
SRP1029	JKP	XX	00	D	ME	0801

Scale 1:250@A0 | Drawn SL | P01P02P03
Job n. 2064 | Checked PG

Responsibility is not accepted for errors made by others in scaling this drawing. Use figured dimension only. This drawing is copyright. © 2022 – Jones King Partnership Ltd