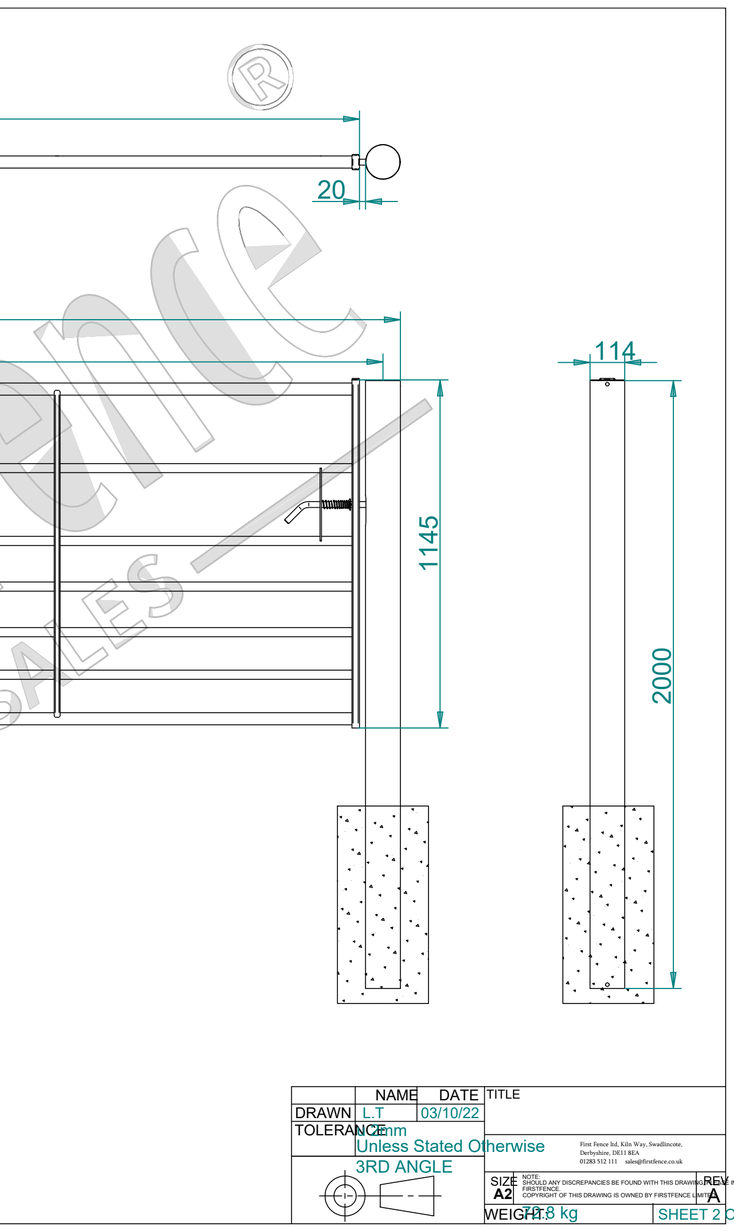

	NAME	DATE	TITLE
DRAWN	L.T	03/10/22	
TOLERANCE	±2mm Unless Stated Otherwise		
3RD ANGLE			
SIZE A2	NOTE: SHOULD ANY DISCREPANCIES BE FOUND WITH THIS DRAWING PLEASE INFORM FIRSTFENCE. COPYRIGHT OF THIS DRAWING IS OWNED BY FIRSTFENCE LIMITED		REV A
WEIGHT: 77.8 kg			SHEET 2 OF 2

First Fence ltd, Kiln Way, Swadlincote, Derbyshire, DE11 8EA
01283 512 111 sales@firstfence.co.uk

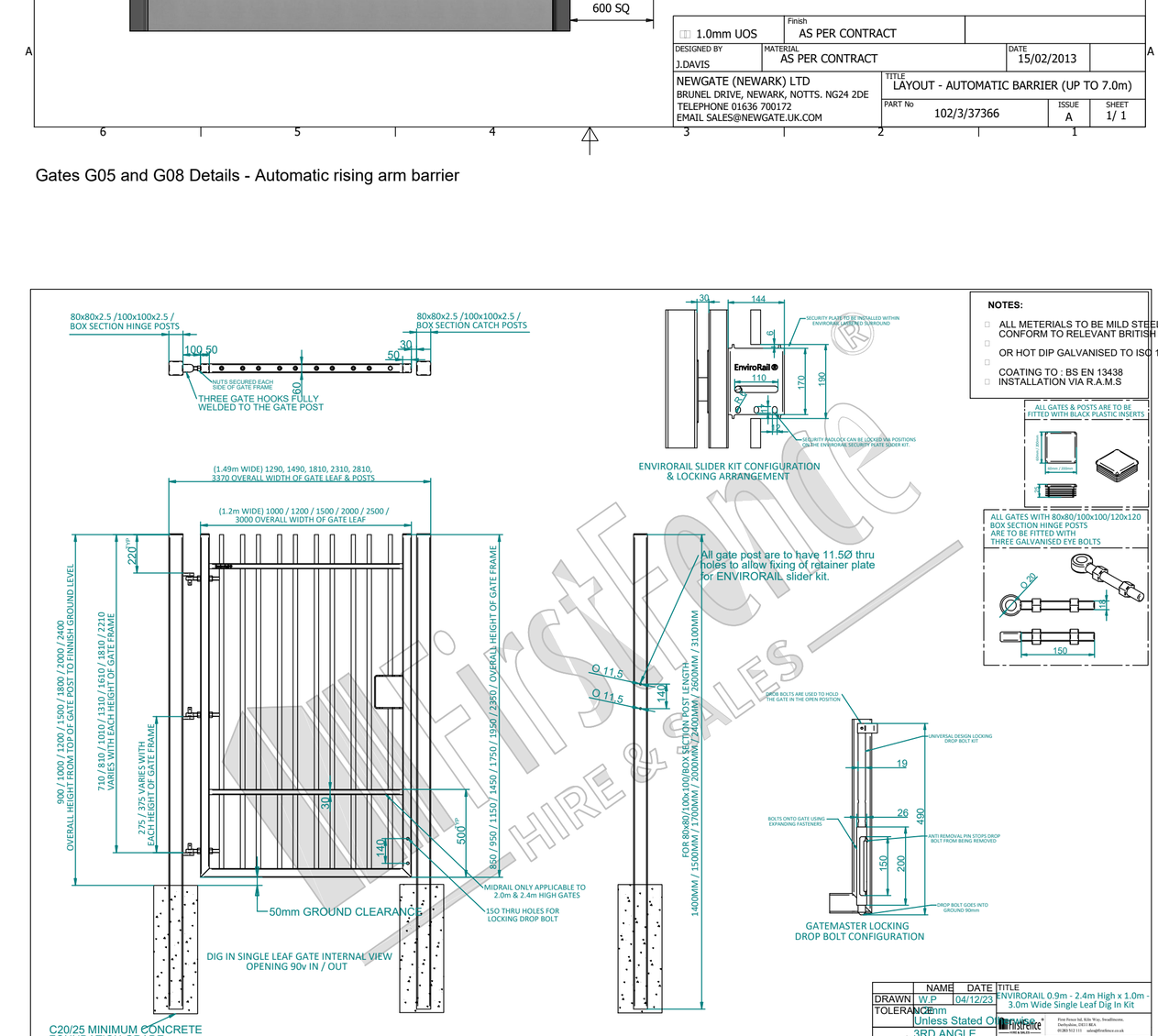

FOUNDATIONS:
CONCRETE TO BE CAST A MINIMUM OF 7 DAYS BEFORE INSTALLATION OF EQUIPMENT.
(GRADE C32/40 - 20mm GRAVEL)
FOUNDATIONS SHOULD BE SMOOTH, FLAT AND LEVEL WITH EACH OTHER

ELECTRICAL SPECIFICATION:

VOLTAGE (V) :	230
FREQUENCY (Hz) :	50
LOAD CURRENT (A) :	6
RATING (Kw) :	0.37
DUTY RATING:	100%

OPTIONAL ACCESSORIES:
PVC / ALUMINIUM CURTAIN (FULL/ HALF)
STOP SIGNS
BOOM LIGHTS
TIP SUPPORT POST

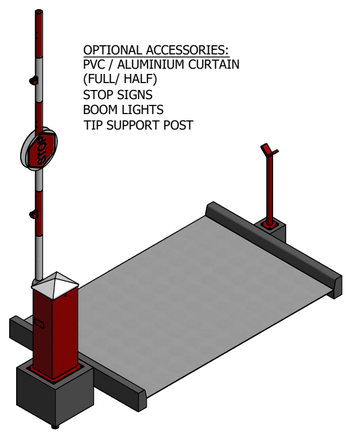

1.0mm UOS	Finish: AS PER CONTRACT		
DESIGNED BY: J.DAVIS	MATERIAL: AS PER CONTRACT	DATE: 15/02/2013	
NEWGATE (NEWARK) LTD BRUNEL DRIVE, NEWARK, NOTTS. NG24 2DE TELEPHONE 01636 700172 EMAIL SALES@NEWGATE.UK.COM	TITLE: LAYOUT - AUTOMATIC BARRIER (UP TO 7.0m)		
	PART No: 102/3/37366	ISSUE: A	SHEET: 1/ 1

Gates G05 and G08 Details - Automatic rising arm barrier

NOTES

1. No dimensions are to be scaled from this drawing.
2. All dimensions are to be checked on site prior to construction

LEGEND

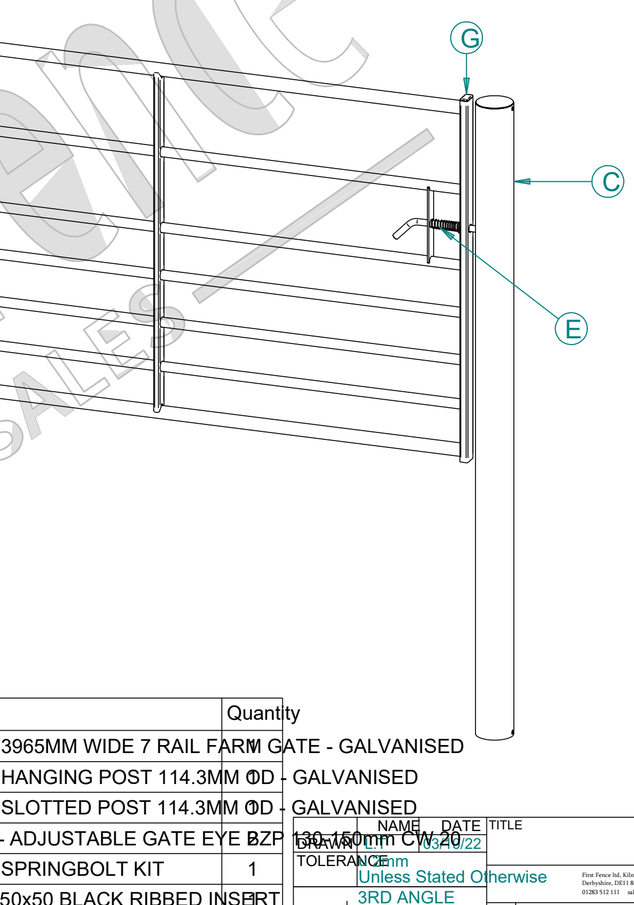

	Quantity
3965MM WIDE 7 RAIL FARM GATE - GALVANISED	1
HANGING POST 114.3MM OD - GALVANISED	1
SLOTTED POST 114.3MM OD - GALVANISED	1
- ADJUSTABLE GATE EYE BZP 130-150mm CW 20	2
SPRINGBOLT KIT	1
50x50 BLACK RIBBED INSERT	2
50x25 BLACK RIBBED INSERT	2

	NAME	DATE	TITLE
DRAWN	L.T	03/10/22	
TOLERANCE	±2mm Unless Stated Otherwise		
3RD ANGLE			
SIZE A2	NOTE: SHOULD ANY DISCREPANCIES BE FOUND WITH THIS DRAWING PLEASE INFORM FIRSTFENCE. COPYRIGHT OF THIS DRAWING IS OWNED BY FIRSTFENCE LIMITED		REV A
WEIGHT: 77.8 kg			SHEET 1 OF 2

First Fence ltd, Kiln Way, Swadlincote, Derbyshire, DE11 8EA
01283 512 111 sales@firstfence.co.uk

1.0mm UOS	Finish: AS PER CONTRACT		
DESIGNED BY: J.DAVIS	MATERIAL: AS PER CONTRACT	DATE: 15/02/2013	
NEWGATE (NEWARK) LTD BRUNEL DRIVE, NEWARK, NOTTS. NG24 2DE TELEPHONE 01636 700172 EMAIL SALES@NEWGATE.UK.COM	TITLE: ENVIRORAIL 0.9m - 2.4m High x 1.0m - 3.0m Wide Single Leaf Dig In Kit		
	PART No: 102/3/37366	ISSUE: A	SHEET: 1/ 1

FILE NAME: VERTICAL BAR RANGE DRAWING SINGLE LEAF.dft

	NAME	DATE	TITLE
DRAWN	W.P	04/12/23	
TOLERANCE	±2mm Unless Stated Otherwise		
3RD ANGLE			
SIZE A2	NOTE: SHOULD ANY DISCREPANCIES BE FOUND WITH THIS DRAWING PLEASE INFORM FIRSTFENCE. COPYRIGHT OF THIS DRAWING IS OWNED BY FIRSTFENCE LIMITED		REV A
WEIGHT:			SHEET 1 OF 2

First Fence ltd, Kiln Way, Swadlincote, Derbyshire, DE11 8EA
01283 512 111 sales@firstfence.co.uk

Gates G05A and G08A Details - Pedestrian black estate fence

N

0m 10m 20m 30m 40m 50m
0mm 10mm 20mm 40mm 60mm 80mm 100mm
SCALE 1 : 500

Revision	Date Issued	Details
C00	-------	Construction Issue

CONSTRUCTION

LK2®
Studio 2, Deepdale Enterprise Park,
Deepdale Lane,
Nettleham, Lincoln
LN2 2LL
T 01522 750777
E info@lk2.co.uk
W www.lk2.co.uk

Registered in England 08206944 - Reg. Office : Studio 2, Deepdale Enterprise Park,Deepdale Lane, Nettleham Lincoln, LN2 2LL

Client Logo

CHRIST'S HOSPITAL
A SCHOOL LIKE NO OTHER

SMITH CONSTRUCTION
The very best of British

Client
Christ's Hospital School & Smith Construction

Project
Bluecoat Sports Expansion Project
Phase 1

Drawing Title
Proposed Gate Schedule and Elevations- Sheet 2
1:500

Scale	Date	Drawn by	Checked by
1:500 at A1	October 2024	AJS	

Project No.	Drawing No.	Revision
893	(00) 104	C00