From: Jason.Hawkes
Sent: 14 March 2024 14:16
To: Planning
Subject: FW: Mowbray - Sports Pavilion Addendum (ref. DC/23/1980)
Attachments: 240314 Addendum 2 Submission.zip

Categories: Index to I@W

Hi

Please put on DC/23/1980 as amended details.

Thanks

Kind regards

Jason Hawkes
Principal Planning Officer

Telephone: 01403 215162
Email: Jason.Hawkes@horsham.gov.uk

Horsham District Council

Horsham District Council, Parkside, Chart Way, Horsham, West Sussex RH12 1RL
Telephone: 01403 215100 (calls may be recorded) www.horsham.gov.uk Chief Executive: Jane Eaton

From: Jones, Alex (London) <alex.j.jones@stantec.com>
Sent: 14 March 2024 14:03
To: Jason.Hawkes <Jason.Hawkes@horsham.gov.uk>
Cc: Tom Davies <Tom.Davies@cala.co.uk>; Mark Wild <mwild@cala.co.uk>; Lo, Joyce <joyce.lo@stantec.com>
Subject: Mowbray - Sports Pavilion Addendum (ref. DC/23/1980)

Hi Jason

I am pleased to attach an addendum to the Sports Pavilion RMA.

This responds to the latest comments from the Council's EHO on the rainwater harvesting system and Sport England on the ball strike fence.

We trust this is in order and will allow this RMA to proceed to determination but do let me know if anything further is required or you have any queries.

I would welcome confirmation of receipt.

Many thanks

Alex Jones
Planning Associate Director

Direct: +44 (0)2074466826
Mobile: +44 (0)7825264528
alex.j.jones@stantec.com

Stantec
7 Soho Square
London W1D 3QB



The content of this email is the confidential property of Stantec and should not be copied, modified, retransmitted, or used for any purpose except with Stantec's written authorization. If you are not the intended recipient, please delete all copies and notify us immediately.

Disclaimer: The content of this email is the confidential property of Stantec and should not be copied, modified, retransmitted, or used for any purpose except with Stantec's written authorization. If you are not the intended recipient, please delete all copies and notify us immediately. This communication may come from a variety of legal entities within or associated with the Stantec group. For a full list of details for these entities please see our website at www.stantec.com. Where business communications relate to the Stantec UK Limited entity, the registered office is Kingsmead Business Park, London Road, High Wycombe, Buckinghamshire HP11 1JU Tel: 01494 526240 and the company is registered in England as registration number 01188070.

Stantec UK Limited
7 Soho Square
London
W1D 3QB
UNITED KINGDOM

14 March 2024

Our ref: 35277/A3/AJ/ac

BY EMAIL
Head of Planning
Horsham District Council
Parkside
Chart Way
Horsham
RH12 1RL

For the attention of Mr Jason Hawkes

Dear Sir

MOWBRAY, HORSHAM, WEST SUSSEX
ADDENDUM TO APPLICATION FOR RESERVED MATTERS APPROVAL – SPORTS PAVILION
LPA REFERENCE DC/23/1980

We write on behalf of Legal & General (Strategic Land North Horsham) Limited ('L&G') in respect of the above site and to submit a second addendum to the application for approval of Reserved Matters for the Sports Pavilion (LPA reference DC/23/1980: 'the RMA') within the Sports Hub.

The RMA is submitted pursuant to Condition 5 of the OPP (LPA reference DC/16/1677) and seeks approval for the following:

> **'Application for approval of Reserved Matters pursuant to Condition 5 of Outline Planning Permission reference DC/16/1677 for the Sports Pavilion.'**

An initial addendum was submitted in December 2023 responding comments from the following:

- HDC Public Health and Licensing (06/11)
- HDC Environmental Health (16/11)
- Sport England (23/11)
- HDC Planning (water neutrality) (23/11)
- HDC Leisure Services (29/11)

A further email (19 December 2023) responded to each of the Leisure Services comments in turn and was agreed as sufficient by the planning team by return (email dated 21 December 2023).

Following the above, further comments on the addendum/ response were received from the Council's EHO and Sport England. These are summarised below alongside L&G's response.

Registered Office: Stantec UK Limited | Buckingham Court, Kingsmead Business Park, Frederick Place, London Road, High Wycombe HP11 1JU | Registered in England No. 01188070

HDC Environmental Health

Whilst the Council's EHO noted the information on the rainwater harvesting system and its maintenance/ management submitted in December 2023, further information has been requested to provide confidence that the system will be appropriately maintained/ managed to mitigate the risk of contamination (see comments dated 25 January 2024).

L&G's engineers, Glanville, have produced a Technical Note (March 2024) sets out the EHO's comments and provides a detailed response. It also brings together the previously submitted manufacturers specifications/ details and provides a Maintenance and Management Plan Appendix D.

Sport England

Sport England has maintained its request for a Labosport Ball Strike Assessment to inform the height and location of the protective fence (see further comments dated 26 January 2024). This has now been completed and is enclosed as part of this addendum.

The Cricket Ball Strike Assessment (February 2024) recommended a fence ranging in height from 5 metres to 10 metres to the northeast of the Pavilion and extending to a length of c. 23 metres around the northeast corner.

The proposed drawings have been updated to provide for a fence that responds to the recommendations. The proposed fence is chain link to a height of 3.6 metres and runs parallel to the northern elevation of the Pavilion separating it from the adjacent grass pitch and wrapping around the northeast corner facing towards the second grass football pitch/ cricket square. The total length is c. 53 metres. On the corner facing towards the cricket square, an additional 6.4 metres of protective netting is proposed providing the total recommended height of 10 metres but at a continuous 10 metres rather than dropping down to 5 metres to simplify the appearance/ design. This exceeds the recommendations of the Labosport Assessment.

The Proposed Plans & Elevations and Sections drawings have been updated (reference 22157-S103B and 22157-S104B). A new drawing of the Proposed Ball Stop Fence System and Fencing (reference 22157-S105B) is also enclosed.

Addendum Submission

This addendum comprises the following (original and unchanged items that remain for consideration are listed with the revisions/ additions submitted through the first addendum identified in red and this second addendum in purple):

01 Application Forms (dated 24 October 2023)

02 Community Infrastructure Levy: Additional Information Forms (dated 24 October 2023)

03 Application Covering Letter including Scope of Submission (dated 24 October 2023); Addendum Covering Letter (15 December 2023); Addendum 2 Covering Letter (14 March 2024)

04 Location Plan (drawing reference 22157-S101A) prepared by OSP Architecture

05 Proposed Plans & Elevations (drawing reference 22157-S103~~A~~ B) prepared by OSP Architecture

06 Design Statement (~~October~~ December 2023: Rev A) prepared by OSP Architecture

07 Planning and Compliance Statement (dated October 2023) prepared by Stantec

08 Energy Statement (dated October 2023, Rev B) prepared by SRE including:

a. BRUKL Output Document (as designed) (dated October 2023)
b. Energy Performance Certificate (Non-Domestic Building) (For Illustration Only)
c. Building Performance Specification and SBEM Summary Report (V1 Rev B)

09 Technical Note: Water Use Requirements and Water Offsetting against Credits (dated October 2023; ~~V2~~ V3) prepared by RPS

010 Utilities Statement (dated 6 October 2023) prepared by Triconnex

~~011 Rainwater Harvesting Management and Maintenance Plan prepared by SPEL including:~~

~~a. Specification Project Data Sheet – Rainwater Harvesting Treatment (November 2023; reference 24811)~~
~~b. Typical Rainsave Layout – Direct Feed (Rev B)~~
~~c. Example SPEL Rainsave Silt/ Debris Chamber Model RSDC 15-50 (Rev A)~~
~~d. SPEL 300 Series Underground Rainsave Tank (reference DJB 24811_003 Rev B)~~
~~e. Ultraviolet Water Disinfection Systems~~

011 Technical Note: Sports Pavilion – Rainwater Harvesting Tank (March 2024) prepared by Glanville

012 Sections (drawing reference 22157-S104~~A~~ B) prepared by OSP Architecture

013 Cricket Ball Strike Assessment (February 2024) prepared by Labosport

014 Proposed Ball Stop Fence System and Fencing (drawing reference 22157-S105B)

We trust this submission is in order and look forward to confirmation of receipt. Should you require further information or have any queries, please do not hesitate to contact me.

Yours faithfully

ALEX JONES
Planning Associate Director

Phone: +44 2074466826
Mobile: 07825264528
alex.j.jones@stantec.com

STANTEC UK LIMITED

cc: Tom Davies – L&G

Enc.

SPORTS PAVILION RMA – CONSULTEE COMMENTS/ L&G RESPONSE
LPA Reference DC/23/1980

CONSULTEE	COMMENT	L&G RESPONSE	UPDATE
HDC Public Health & Licensing (06/11)	1. No operation of any commercial building services plant shall be permitted until a scheme for the control of noise of any plant has been submitted to and approved in writing by the local planning authority. The scheme shall ensure the cumulative noise rating level emitted from the proposed plant and equipment, determined using BS4142:2014, shall not exceed 35 dB at the boundary of the nearest proposed noise sensitive receptor. The scheme shall be implemented in accordance with the approved details and attenuation measures, and they shall be permanently retained and maintained in working order for the duration of the use and their operation.	The Sports Pavilion is located centrally within the Sports Hub and not in proximity to existing or future residential properties. The nearest existing properties are on the opposite side of the A264 over 200m to the south. The nearest future residential properties will be to the northwest some 150m away and separated by existing ancient woodland. Query whether a condition to this effect is necessary?	Agreed with planning team that no condition required.
	2. A Light Impact Assessment should be provided, and mitigation measures considered in relation to any floodlighting and the prevention of light pollution and light trespass and to safeguard the living conditions of residents. In addition, it is recommended that a full and precise predicted lighting plot and overspill plan must be submitted. The flood lighting shall not be installed until the plan is approved by the Local Planning Authority.	Already required by OPP C63.	Agreed with planning team that new condition not required.
	3. There must be suitable provisions for odour control for any commercial kitchen extract ventilation system and correct positioning of flues if appropriate. I recommend that that the	As above re distance to residential properties and whether a condition to this effect is necessary?	Agreed with planning team that no condition required.

CONSULTEE	COMMENT	L&G RESPONSE	UPDATE
	applicant or his/her representative has regard to the latest Guidance on the Control of Odour and Noise from Commercial Kitchen Exhaust Systems.		
	4. Facilities for commercial waste & refuse areas should be located well away from proposed neighbouring residential premises.	As above re distance to residential properties.	Agreed.
	5. Suitable provision for must be made for drainage. This should include grease traps to any commercial kitchens.	Grease traps, for example, to be provided as necessary.	Agreed.
	6. The applicant or his/her representative should have regard to the Institution of Lighting Engineers (ILE) guidance on Reducing Obstructive Light with the positioning of any proposed external security lighting, illuminated signage or similar. This is to eliminate potential light nuisance to neighbouring properties.	None proposed.	-
	7. Restrictions on hours of use for deliveries & commercial waste collections are recommended to control noise disturbance to residents living within or close to the development. Recommended time are: • 08.00 – 19.00 Monday to Friday, • 09.00 – 18.00 Saturdays • No activity on Sundays or Bank Holidays.	As above re distance to residential properties. The vehicular access to the Pavilion comes directly from the A264 via the Employment Land and not through or near a residential part of the development. Alternative delivery/ servicing hours may be appropriate / desirable to avoid times when the Sports Hub is operational so as to avoid conflicts with users, for example. Query with a condition to this effect would be necessary/ reasonable?	Agreed with planning team that no condition required.

CONSULTEE	COMMENT	L&G RESPONSE	UPDATE
	8. The applicant or his/her representative should have regard to the British Standards for any proposed public address system.	Noted.	-
	9. Consideration must be given to mitigation of noise from car parks to any proposed residential properties from vehicle noise and noise from patrons leaving the premises late at night.	As above re distance to residential properties and vehicular access directly from the A264.	Agreed.
HDC EHO (16/11)	Request for a 'detailed private water supply management and maintenance plan' for the rainwater harvesting system.	Prepared by SPEL – to be submitted as an addendum to the RMA.	**March 2024 Update:** Further details on maintenance/ management requested by the EHO. Technical Note (March 2024) prepared by Glanville and submitted with second addendum.
Sport England (23/11)	Sport England objects to this application as it is not considered to meet our PROVIDE objective because the cricket ball strike risk to the pavilion previously identified has not been addressed. We will reconsider this position should amended/additional details be provided to address the following points. i. A Labosport ball strike assessment to assess the risk posed by the location of the pavilion in close proximity to the cricket pitch. ii. Proposals for mitigation to address any ball strike risk identified as necessary by the assessment.	Protective fence added to the detailed proposals for the Sports Hub – alignment shown on the Sports Pavilion drawing but sitting outside of the RMA red line (circled blue below):	HDC has agreed with amending red line to include ball strike fence – SE to be reconsulted once updated details submitted. **March 2024 Update:** SE maintained request for Labo Sport Assessment. This has now been produced and has informed revised ball-strike protective fence

CONSULTEE	COMMENT	L&G RESPONSE	UPDATE
		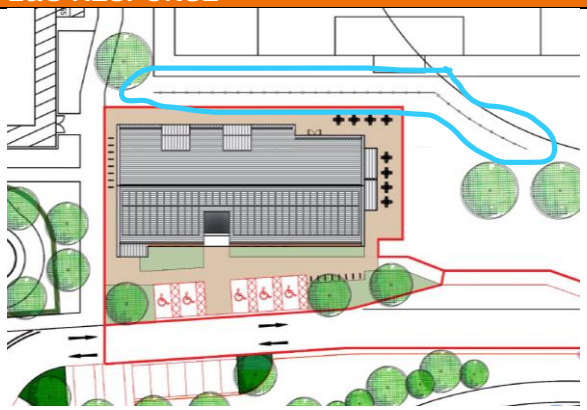 L&G propose to extend the Pavilion RMA red line to include the protective fence and submit an amended red line/ layout drawing alongside details/ specification for the fence. HDC to confirm this is an acceptable response.	proposals. Labo Sport Assessment and revised plans submitted as part of second addendum.
HDC Planning – Water Neutrality (23/11)	With this application and going forward, we feel that 10% headroom should be added to the water usage. This takes into account any anomalies. There is plenty of head room in the water credits to allow this.	Query basis/ evidence for headroom.	5% on the Gue Industrial Unit credits agreed with HDC – RPS to update report
	Also, the water neutrality statement includes an actual and estimated water bill for the Gue Industrial Units. It would be better to have two actual water bills. I'd be grateful if you could see if this can obtained.	Only the two water bills provided were made available at the time of acquisition of the Gue industrial units. No others were available.	HDC has agreed with the bills provided subject to above contingency.

CONSULTEE	COMMENT	L&G RESPONSE	UPDATE
HDC Leisure Services (29/11)	It is important to support the provision of sports facilities for girls. To take one example, girls' football has increased substantially over the last few years and there is often a requirement for toilet facilities. Ensure the layout of the pavilion allows for safeguarding girls using the toilet and changing facilities on the pitch side. It may not be acceptable to allow girls into a shared use corridor, so the layout may need to be adjusted.	The changing rooms have been designed to provide three separate changing areas each with dedicate toilet and shower facilities. The intention is that these are managed based on female/ male participation and separated accordingly. Additional dedicated male and female toilet facilities are provided between the main entrance and social space.	Responses agreed with the planning team (see email dated 21/12/2023)
	Latest guidance suggests that showers should be separate and not communal.	The design has been based on the latest Sport England guidance on designing clubhouses which provides for communal showers. As above re separate changing/ showering facilities.	
	More officials changing rooms needed to allow for different teams and both male and female officials.	The number of officials changing spaces has been designed based on the number of pitches. Two changing rooms/ showers are provided so that these can be managed as male and female changing/ showering areas as necessary.	
	Consider a hatch, pitch side for serving food and drink, which is usually in demand at sports matches. This will provide the opportunity for the operator to make some money to contribute to the running of the pavilion.	There is not a location pitch side to provide this without moving the equipment store which is best placed on the pitch side of the building. There are large entrance doors towards the grass pitches to encourage patrons to use the social space/ servery for refreshments during matches.	
	The bin store is a long way from the kitchen. Consider moving it closer.	The aim has been to provide active frontages to as much of the social space as possible. The bin is located in an easily accessible location on the front of the building and adjacent to a main access path for ease of collection.	

CONSULTEE	COMMENT	L&G RESPONSE	UPDATE
	Provide CCTV on all sides of the building and monitoring of the car park. This will help to deter anti-social behaviour under the canopies and enable the access to the car park to be monitored if needed, as direct access from the A264 could lead to anti-social use at night.	This will be determined by the end user who will seek appropriate approvals as necessary.	
	Remove the green areas from the front of the building, because they will prove difficult to maintain.	These assist in greening the frontage of the Pavilion, creating a landscaped approach from the front and along the main foot/ cycle way of the access road. They have been designed to be a sufficient width to maintain.	
	Ensure bike racks to the south are not placed under trees, because there will be ongoing issues with leaf litter and bird droppings.	The periphery of a tree canopy falls over three/ four of the bike racks. However, these trees form an integral feature of the setting of the Pavilion, assisting legibility and greening. On balance, we consider the loss of this tree to be detrimental to the overall Sports Hub proposals.	
LLFA (07/12)	Requested network drainage calculations and full detailed design for drainage of the pitches.	The LLFA comments relate to the sports pitches and wider drainage features within the Sports Hub which do not form part of the Pavilion RMA and are already approved. The Pavilion will connect into the already approved drainage system so no further details are required.	Agreed with the planning team (see email dated 19/12/2023)

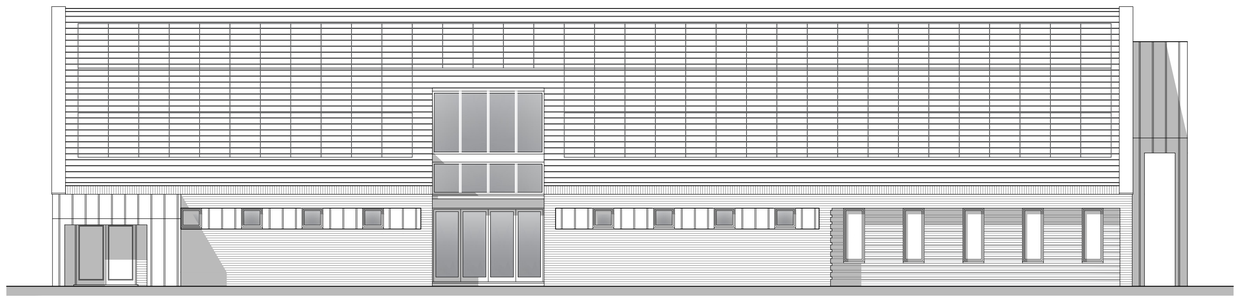

Front Elevation

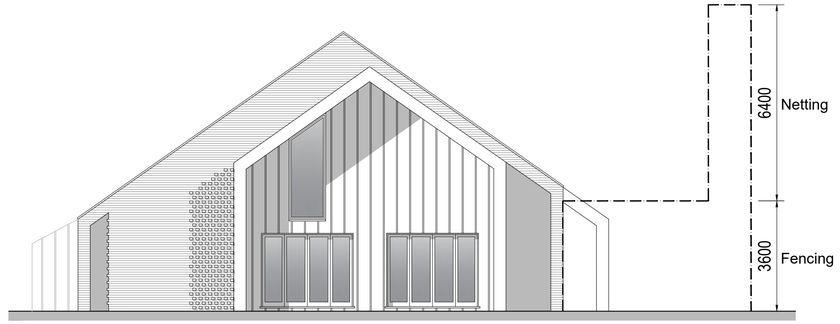

Side Elevation B

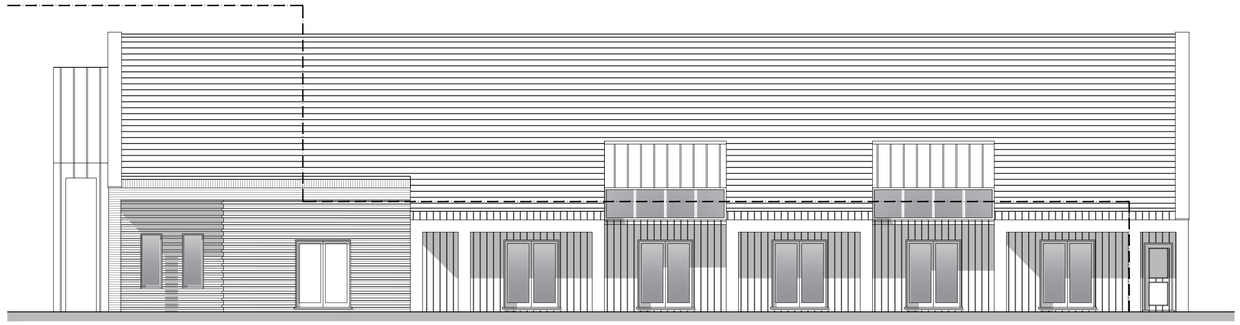

Rear Elevation

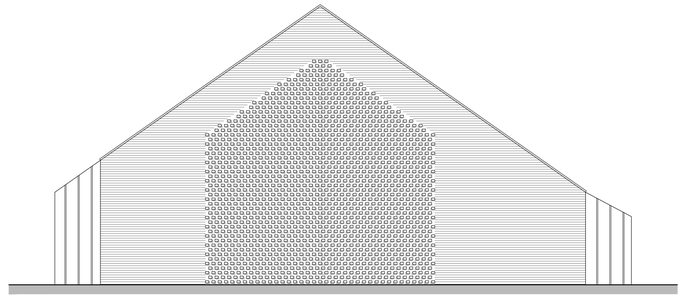

Side Elevation A

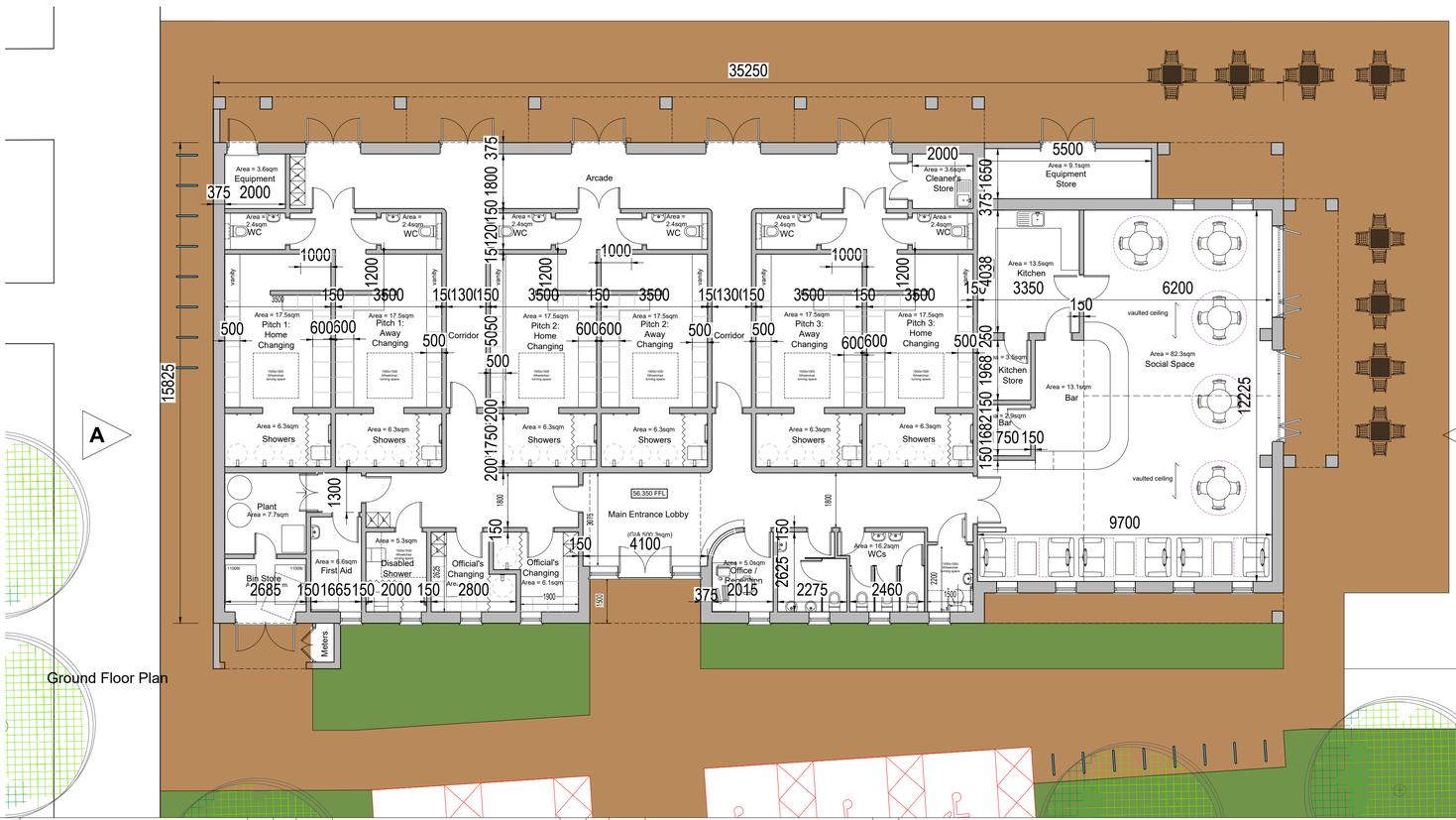

Ground Floor Plan

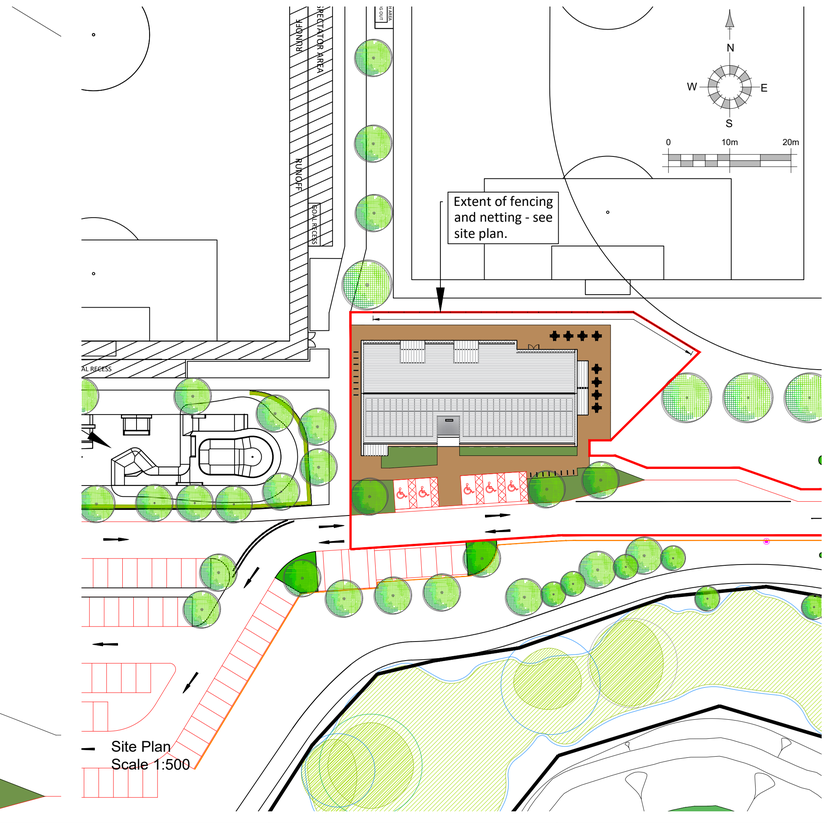

REV.	DATE	REVISIONS:	BY
A	11/12/23	Red Boundary Line amends to include the ball fence.	A.Gh.
B	19/02/24	Revisions to ball fence.	AM

Planning

CLIENT:	Legal & General	PROJECT:	Sports Pavilion Mowbray, North Horsham
SCALE:	1:100 (A1 ORIGINAL)	DRAWING:	Proposed Plans & Elevations
DRAWN: JF DATE: 01/01/22	22157	P103	B

architecture planning masterplanning
Broadmede House, Farnham Business Park,
Weydon Lane, Farnham, Surrey GU9 8QT.
info@osparchitecture.com www.osparchitecture.com
Tel: 01252 267878

© COPYRIGHT EXISTS ON THE DESIGNS AND INFORMATION SHOWN ON THIS DRAWING This drawing may be scaled or cross referenced to the scale bar for planning application purposes only. Do not scale for any other purpose, use figured dimensions only. Subject to site survey and all necessary consents. All dimensions to be checked by user and any discrepancies, errors or omissions to be reported to the Architect before work commences. This drawing is to be read in conjunction with all other relevant materials. OS Licence No. 100007327

0 5m 10m

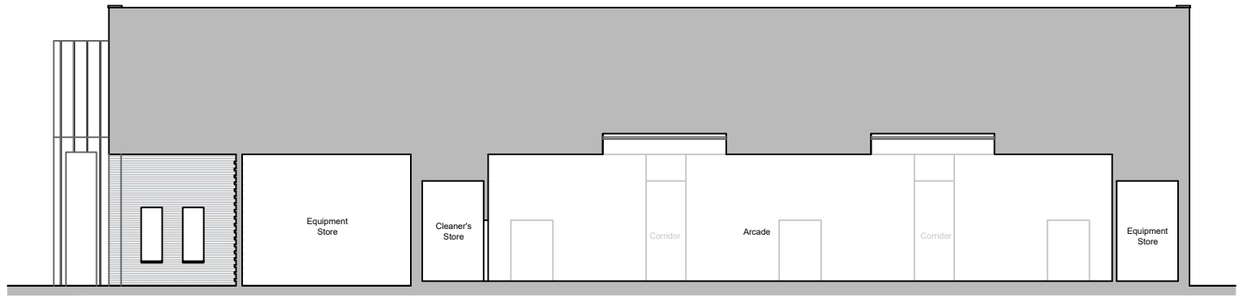

Section A

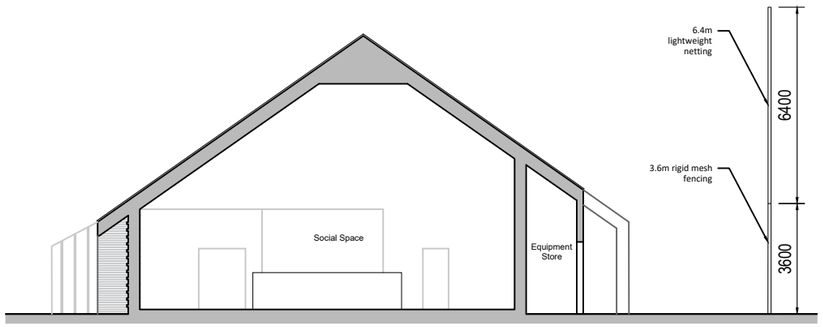

Section B

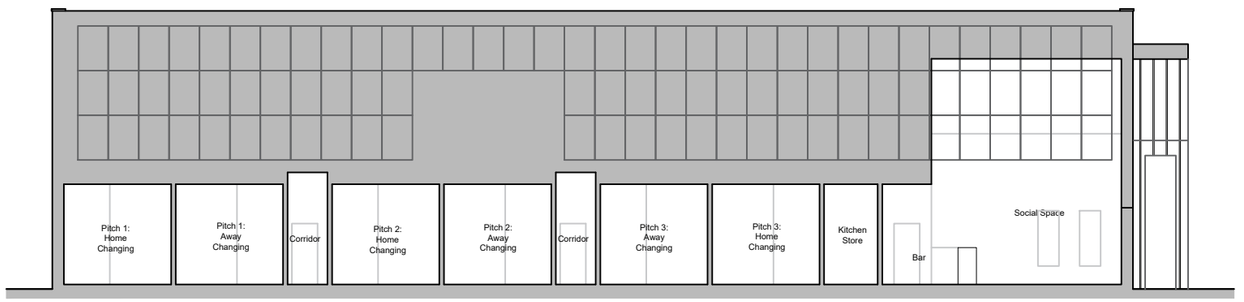

Section D

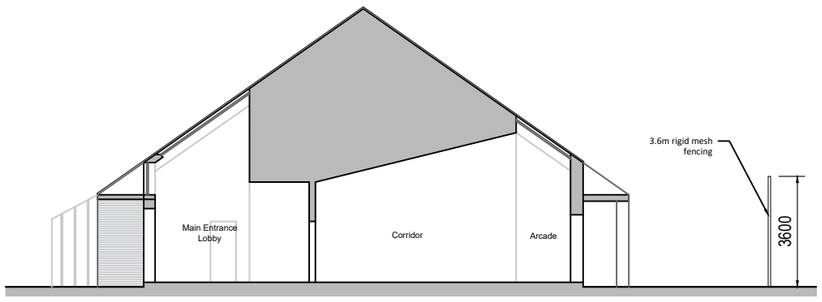

Section C

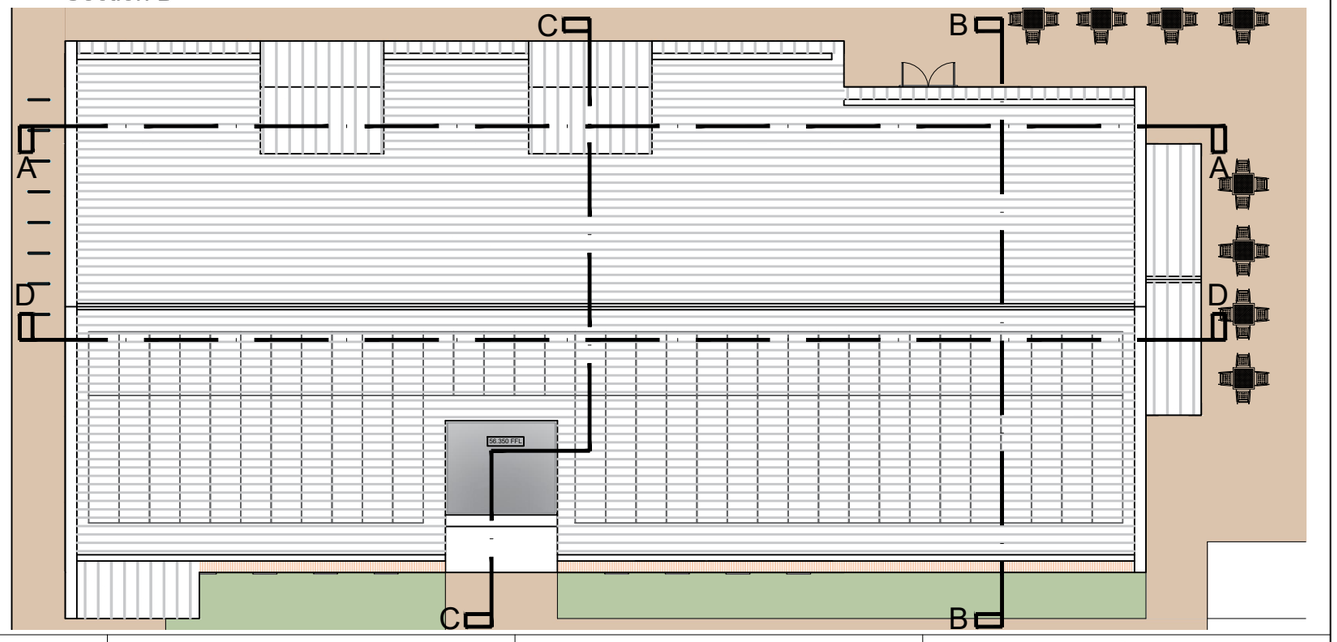

REV.	DATE	REVISIONS:	BY	STATUS:
A	11/12/23	Red Boundary Line amends to include the ball fence.	A.Gh.	Information
B	19/02/24	Revisions to ball fence.	AM	

© COPYRIGHT EXISTS ON THE DESIGNS AND INFORMATION SHOWN ON THIS DRAWING

This drawing may be scaled or cross referenced to the scale bar for planning application purposes only. Do not scale for any other purpose, use figured dimensions only. Subject to site survey and all necessary consents. All dimensions to be checked by user and any discrepancies, errors or omissions to be reported to the Architect before work commences. This drawing is to be read in conjunction with all other relevant materials. OS Licence No. 100007327

CLIENT:	Legal & General		PROJECT:	Sports Pavilion Mowbray, North Horsham
SCALE:	1:200	(A3 ORIGINAL)	DRAWING:	Sections
DRAWN: JF DATE: 09/10/23	22157		P104	B

architecture planning masterplanning
Broadmede House, Farnham Business Park,
Weydon Lane, Farnham, Surrey GU9 8QT.
info@osparchitecture.com www.osparchitecture.com
Tel: 01252 267878
O'Keeffe Scanlon Limited. Company Registration No. 2878091

All fencing and netting to prevent passage of cricket ball. Refer to Labosport ball strike assessment for details, 2.0 - 01/02/2024

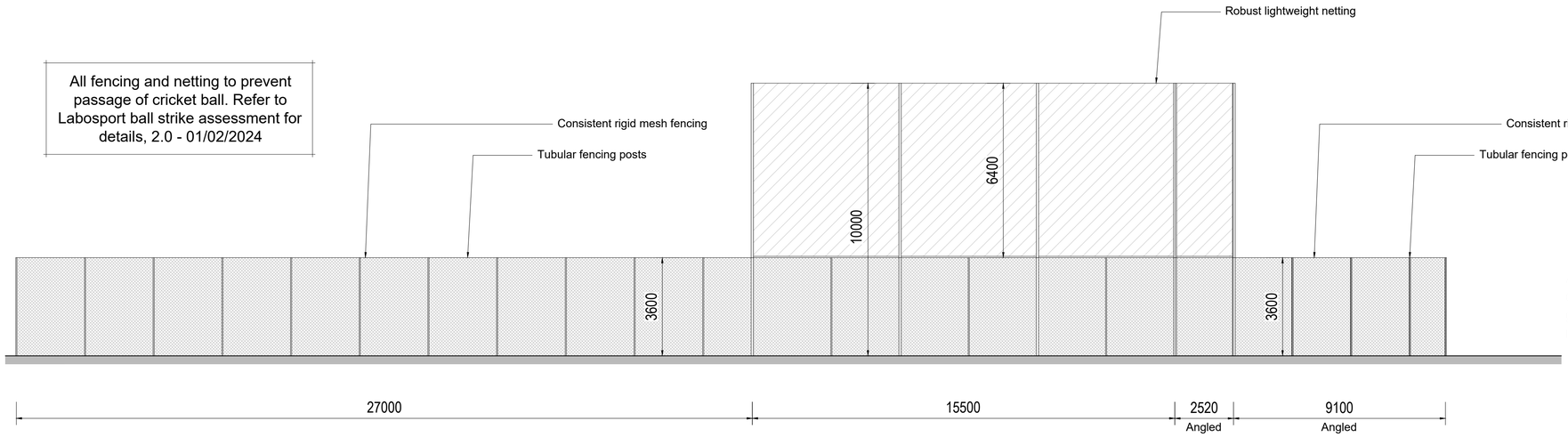

All fencing, netting, posts etc to be RAL 6028 (Pine green) - or similar to manufactures specification.

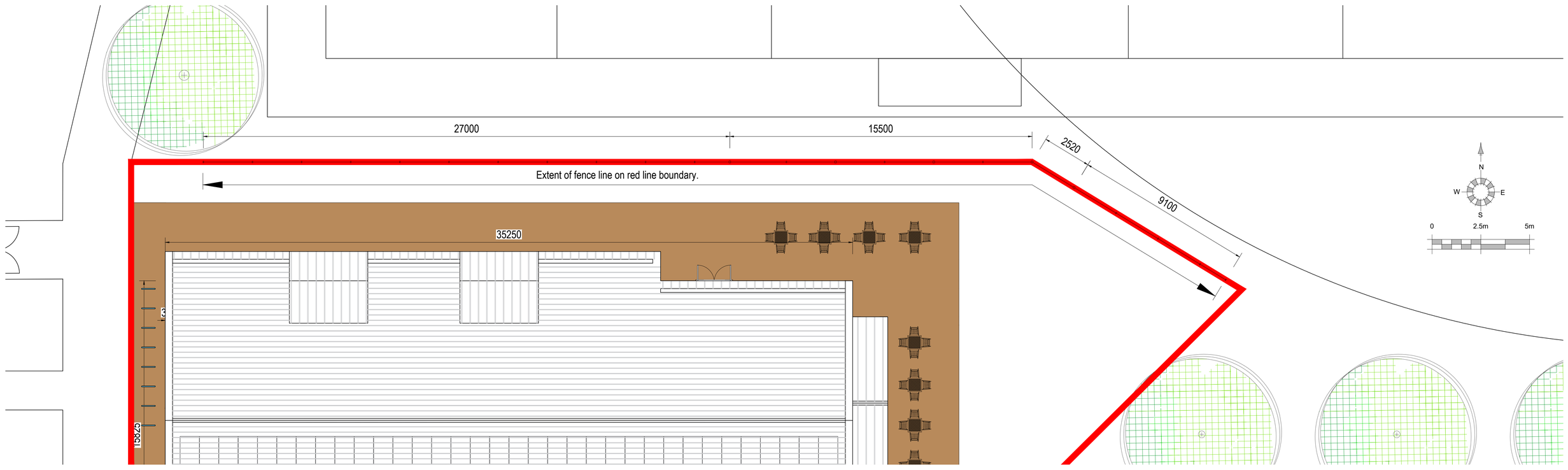

REV.	DATE	REVISIONS:	BY	REV.	DATE	REVISIONS:	BY	REV.	DATE	REVISIONS:	BY	STATUS:
B	19/02/24	Revisions to ball fence & RAL colour added.	AM									

Planning

© COPYRIGHT EXISTS ON THE DESIGNS AND INFORMATION SHOWN ON THIS DRAWING This drawing may be scaled or cross referenced to the scale bar for planning application purposes only. Do not scale for any other purpose, use figured dimensions only. Subject to site survey and all necessary consents. All dimensions to be checked by user and any discrepancies, errors or omissions to be reported to the Architect before work commences. This drawing is to be read in conjunction with all other relevant materials. OS Licence No. 100007327

CLIENT:	Legal & General		PROJECT:	Sports Pavilion Mowbray, North Horsham
SCALE:	1:100	(A1 ORIGINAL)	DRAWING:	Proposed Ball Stop Net System and Fencing
DRAWN: NL DATE: 01/01/22	22157		P105	B

architecture planning masterplanning
Broadmede House, Farnham Business Park,
Weydon Lane, Farnham, Surrey GU9 8QT.
info@osparchitecture.com www.osparchitecture.com
Tel: 01252 267878
OSP Architecture Limited. Company Registration No. 2878901

HORSHAM SPORTS HUB

CRICKET BALL STRIKE ASSESSMENT

LABOSPORT

This report contains 11 pages, it may not be used for commercial purposes unless it is reproduced in its entirety.

BALL STRIKE ASSESSMENT– HORSHAM SPORTS HUB

CLIENT	David Jarvis Associates Ltd
SITE ADDRESS	Land to the North of A264
CLIENT CONTACT	Paul Gibbs

REPORT NUMBER	LSUK.24-0085_CBA	
VERSION NUMBER & DATE	2.0	01/02/2024
REPORTED BY	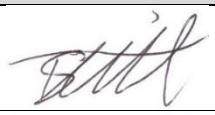	Toby Smith Special Projects Consultant
APPROVED BY	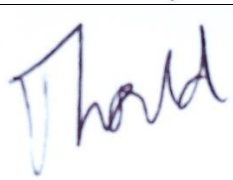	Tom Would Consultant

INTRODUCTION	To assess the potential risk of cricket balls surpassing the boundaries of a cricket pitch at Horsham Sports Hub, Labosport Ltd has reviewed the site distances and topography to analyse the risk of balls surpassing the site boundaries. The analysis uses a cricket ball trajectory model that has been developed by Labosport, in collaboration with the ECB. If required, the report will identify the height of any ball trajectory mitigation to minimise the potential risks. **Note:** This is a desk study, Labosport have not visited the site, taken measurements, or carried out a visual inspection. All measurement information has been provided by the client and any error in measurements are not the responsibility of Labosport. This assessment is undertaken on the basis of accurate data.

CONTENTS

Section 1 – Executive Summary of Conclusions	**2**
Section 2 – Cricket Ball Trajectory Model	**3**
Section 3 – Site Specifics	**5**
Section 4 – Site Measurements	**6**
Section 5 – Estimated Ball Height	**7**
Section 6 – Risk Assessment Discussion	**8**
Section 7 – Conclusions	**9**
Appendix A – Typical Example Trajectories	**10**

LABOSPORT LTD
Unit 3 Aerial Way, Hucknall, Nottinghamshire, NG15 6DW
+44 (0) 115 968 1998
info@labosport.co.uk

This report contains 11 pages, it may not be used for commercial purposes unless it is reproduced in its entirety

Section 1 – Executive Summary of Conclusions

Executive Summary of Conclusions

This report has been prepared to assess the potential risk of cricket balls surpassing the boundaries of a cricket at Horsham Sports Club and advise on the height and location of mitigation recommended to provide a suitable level of protection.

Orientation	Recommended mitigation height (based on recreational cricket)
Southwest	10 m

Please Note: This may not stop all shots from landing beyond the site boundary, but it is believed from the assessment of the ball trajectory it will significantly reduce their frequency.

The below diagram shows the proposed locations of the recommended mitigation for heights detailed above:

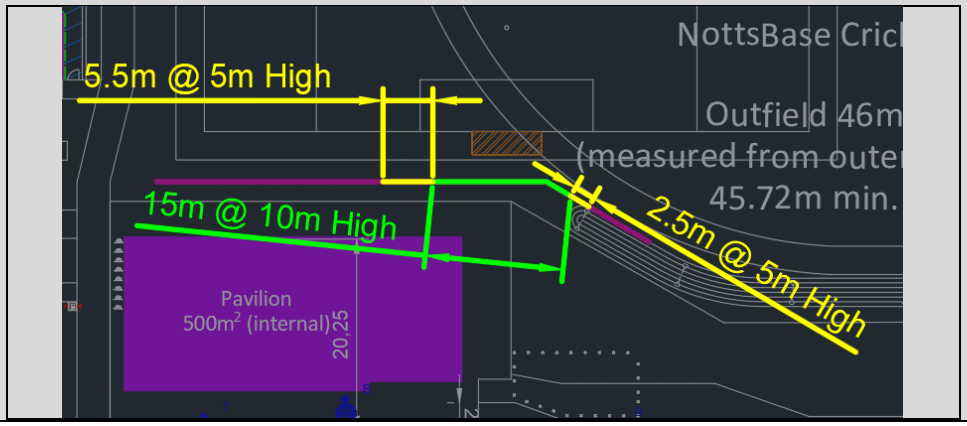

This report contains 11 pages, it may not be used for commercial purposes unless it is reproduced in its entirety

Section 2 – Cricket Ball Trajectory Model

Trajectory Model Overview

Previous work undertaken by Labosport for the England and Wales Cricket Board (ECB) led to the development of a sophisticated trajectory model to estimate the distance a ball would travel, and its trajectory given a specific velocity, angle, spin rate and atmospheric conditions (i.e. altitude).

The trajectory model uses aerodynamic principles and Newtonian physics to predict the ball flight path whilst accounting for the effect of air resistance. The model uses aerodynamic coefficients taken from published wind tunnel studies on cricket balls at different velocities.

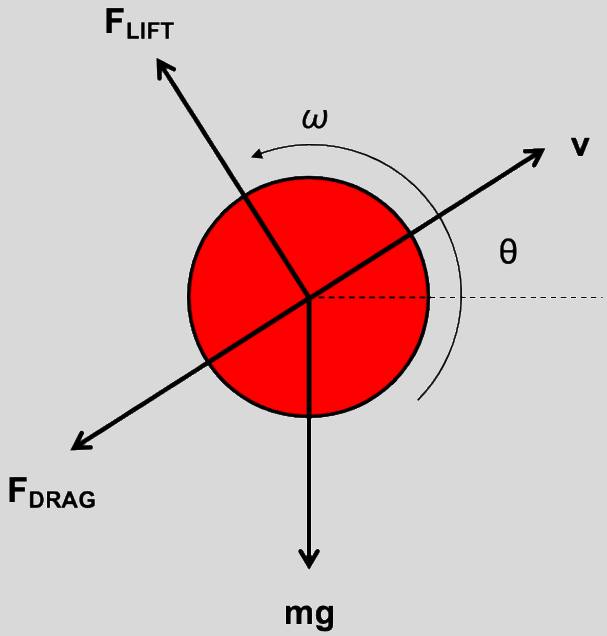

The aerodynamic forces of drag (F_D) and lift (F_L) are proportional to the ball's velocity relative to the air flow, frontal area, air density and the drag coefficient respectively lift coefficient. The forces are defined as:

$$F_D = \frac{1}{2} C_D \rho V^2 A$$
$$F_L = \frac{1}{2} C_L \rho V^2 A$$

where C_D and C_L are the non-dimensional drag and lift coefficients, ρ is the air density in kg/m^3, V is the air stream velocity in m/s and A is the frontal area of the ball in m^2. Due to the complexity of the flight dynamics, the trajectory can only be resolved by using a numerical time step approach whereby the ball conditions are calculated at small timesteps throughout the trajectory. The conditions at time step 1 are used to calculate the conditions at time step 2; the conditions are timestep 2 are used to calculate the conditions at time step 3 and henceforth. A timestep of 0.001 seconds was used to generate high-resolution trajectory data.

Trajectory models are known to exhibit high accuracy and Labosport have undertaken extensive experimental validation of this trajectory model to refine its accuracy. However, it is not possible to simulate the full complexity of the real world and this model does not account for variations in bat/ball restitution or wind (speed and direction). Due to these limitations, the model is regarded as an indicative prediction tool.

LABOSPORT LTD
Unit 3 Aerial Way, Hucknall, Nottinghamshire, NG15 6DW
+44 (0) 115 968 1998
info@labosport.co.uk

This report contains 11 pages, it may not be used for commercial purposes unless it is reproduced in its entirety

Trajectory Scenarios

The hit angles and velocities are estimated from in-game action to cover a range of 'typical' shots ranging from 20 degrees to 50 degrees and 20 m/s (45 mph) to 50 m/s (112 mph). The exact frequency of shots resulting in a cricket ball being hit into adjacent areas is unknown and impossible to predict with certainty (player skills, type of game and many other factors can influence this) hence a proportionate approach needs to be taken to provide safety to users. In reality, there may be a "freak" shot that will result in a further than expected trajectory; however, the implications of planning for this type of worst-case approach could result in the closure of hundreds of cricket grounds across the country and hence a balanced risk mitigation strategy needs to be implemented that is proportionate. Indeed, there are risks associated with many everyday activities, but plans need to be developed to reduce risk following good practical health and safety principles including a combination of likelihood and severity.

Trajectories at an angle to the pitch

In scenarios where the direction of the trajectory is perpendicular to the direction of the pitch (or within 45 degrees of perpendicular), the analysis considers one trajectory scenario. This scenario is a ball trajectory played from the closest batting crease in the trajectory direction.

Trajectories parallel to the pitch

Where the direction of the trajectory is parallel to the direction of the pitch (or within 45 degrees), the analysis considers two trajectory scenarios; 1) a trajectory played from the closest batting crease, and 2) a trajectory played from the furthest batting crease. The type of cricket batting shots required to hit the ball from closest stumps are 'late cut' and 'late glance' shots and these do not achieve the same velocity as a 'straight drive' from the furthest batting crease. A greater emphasis is therefore placed on trajectories from the furthest batting crease.

Previous Work

Labosport Ltd have undertaken this type of boundary risk assessment for a great many other cricket grounds over the past 5 years when there have been perceived problems with cricket balls exceeding the boundary, or the potential influence of a new adjacent development to an existing club. Through this work, Labosport Ltd have developed significant expertise that supports our judgements in these matters.

LABOSPORT LTD
Unit 3 Aerial Way, Hucknall, Nottinghamshire, NG15 6DW
+44 (0) 115 968 1998
info@labosport.co.uk

This report contains 11 pages, it may not be used for commercial purposes unless it is reproduced in its entirety

Section 3 – Site Specifics

Playing Standard of Cricket on the Site

As this is a new development Labosport have been unable to investigate the level of play on this site. Therefore this report is based on cricket at a recreational level and valid up to ECB premier league standard cricket.

For recreational level cricket the basis of the shot velocity is 40 m/s. For recreational level cricket the basis of the 'late cut' or 'late glance' type shots is 30 m/s

It is on this basis that the recommendations in this report have been made.

Existing Mitigation

There is currently existing mitigation around the facility.

This report does not account for any existing, or planned planting (trees, hedges etc). It is our informed opinion that planting cannot be relied upon to provide protection against ball trajectories. The planting may not be sufficiently dense to stop the ball, nor homogeneous across the length. The planting may change during the seasons, or indeed be cut back or removed.

Site Measurements and Topography

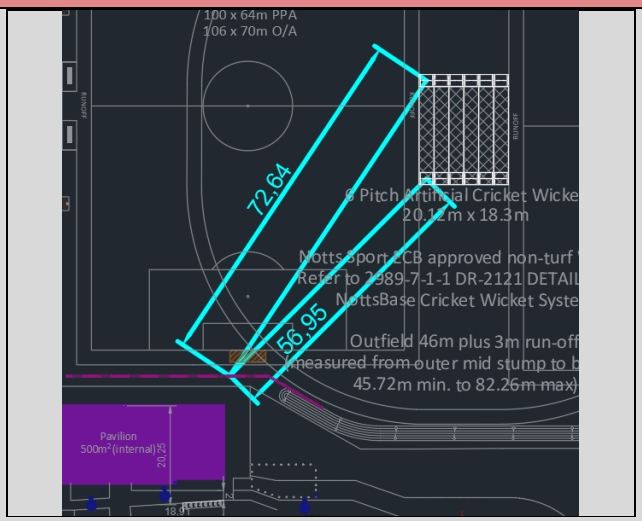

Note that we are now going to measure, report and account for any topographical changes greater than 1 metre.

Orientation of Risk

At the instruction of the client, this boundary risk assessment only evaluate possible ball trajectories in a southwestern direction towards the proposed pavillion. The focus on the analysis is based on the shortest distances from the closest cricket pitches to the potential area of risk.

LABOSPORT LTD
Unit 3 Aerial Way, Hucknall, Nottinghamshire, NG15 6DW
+44 (0) 115 968 1998
info@labosport.co.uk

This report contains 11 pages, it may not be used for commercial purposes unless it is reproduced in its entirety

Section 4 – Site Measurements

Site Measurements

The above diagram illustrates the minimum distances from the cricket square to the site boundaries. Note as this is a risk assessment the worst-case scenarios are considered; consequently, the shortest measured (and calculated) distance is used for the study. The following distances have been used to calculate the projected height of the ball for different shot conditions as specified below:

Measured Distance	Shortest Boundary (m)
Southwest – Closest stump to site boundary	Circa 56.95 m
Southwest** – Furthest stump to site boundary	Circa 72.64 m

LABOSPORT LTD
Unit 3 Aerial Way, Hucknall, Nottinghamshire, NG15 6DW
+44 (0) 115 968 1998
info@labosport.co.uk

This report contains 11 pages, it may not be used for commercial purposes unless it is reproduced in its entirety

Section 5 – Estimated Ball Height

Estimated Ball Height (Using the Projection Modelling Tool)

Southwest Orientation

Estimated Ball Height @ 56.95 m		Angle (degrees)						
		20	25	30	35	40	45	50
Velocity (m/s)	20	0	0	0	0	0	0	0
	25	0	2.0	4.0	5.7	7.3	8.6	9.3
	30	3.1	5.5	7.9	10.3	12.6	14.8	16.9
	35	5.1	7.7	10.3	13.0	15.7	18.6	21.5
	40	6.4	9.1	11.8	14.8	17.9	21.2	24.5
	45	7.3	10.1	13.0	15.9	19.2	23.0	26.8
	50	7.9	10.8	13.7	16.8	20.4	24.0	28.2
Estimated Ball Height @ 72.64 m		Angle (degrees)						
		20	25	30	35	40	45	50
Velocity (m/s)	20	0	0	0	0	0	0	0
	25	0	0	0	0	0	0	0
	30	0	0	0	0	0	0	0
	35	0	0	3.6	6.4	8.1	8.3	6.5
	40	2.4	5.9	9.6	12.6	15.6	17.5	18.0
	45	5.5	9.6	13.3	17.0	20.6	23.8	26.0
	50	7.9	12.0	16.1	20.3	24.4	28.4	31.6

See Appendix A for example trajectories.

LABOSPORT LTD
Unit 3 Aerial Way, Hucknall, Nottinghamshire, NG15 6DW
+44 (0) 115 968 1998
info@labosport.co.uk

This report contains 11 pages, it may not be used for commercial purposes unless it is reproduced in its entirety

Section 6 – Risk Assessment Discussion

Risk Assessment Discussion
This report has been prepared to assess the potential risk of cricket balls surpassing the boundaries of a cricket ground at Horsham Sports hub and to advise on the height and location of mitigation recommended to provide a suitable level of protection.

Mitigation Recommendations – Southwest Orientation

Distance	Distance to boundary	Mitigation height (majority of risk removed)	Mitigation height (vast majority removed)	Overall mitigation height recommendation
Closest stump to site boundary @ 30 m/s	56.95 m	10 m high	12 m high	**10 m high**
Furthest stump to site boundary @40 m/s	72.64 m	0 m high	0 m high	

Please Note: This may not stop all shots from landing beyond the site boundary, but it is believed from the assessment of ball trajectory it will significantly reduce their frequency.

Further Notes

This report does not recommend the specific design of a mitigation system, however options could include;

- Ball stop netting
- Rigid panel fencing
- Permanent or temporary fencing structures

It is recommended the client discuss design options with the relevant stakeholders including the LPA, the ECB and the cricket club.

In addition, the client may wish to consider alternative mitigation options such as the location and orientation of the cricket square, controlling the level of cricket played on the site, or defining the location of junior and senior cricket pitches. It is recommended that the client discusses any such plans with the ECB and other relevant organisations along with the club to ensure that plans are suitable in mitigating the risk but also practicable for the cricket club's day to day use.

LABOSPORT LTD
Unit 3 Aerial Way, Hucknall, Nottinghamshire, NG15 6DW
+44 (0) 115 968 1998
info@labosport.co.uk

This report contains 11 pages, it may not be used for commercial purposes unless it is reproduced in its entirety

Section 7 – Conclusions

Conclusions

This report has been prepared to assess the potential risk of cricket balls surpassing the boundaries of a cricket pitch at Horsham Sports Hub and advise on the height and location of mitigation recommended to provide a suitable level of protection.

Orientation	Recommended mitigation height (based on recreational cricket)
Southwest	10 m

Please Note: This may not stop all shots from landing beyond the site boundary, but it is believed from the assessment of the ball trajectory it will significantly reduce their frequency.

The below diagram shows the proposed locations of the recommended mitigation for heights detailed above:

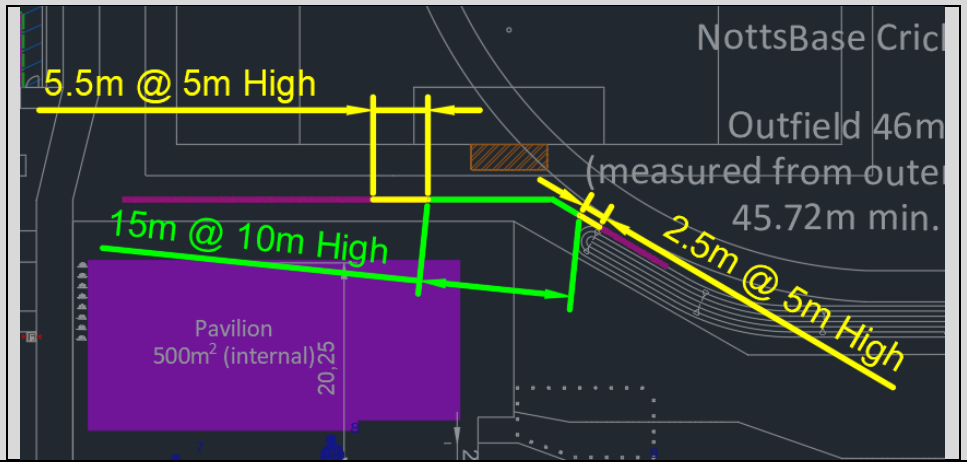

This report contains 11 pages, it may not be used for commercial purposes unless it is reproduced in its entirety

Appendix A – Typical Example Trajectories

20 ° @ 40 m/s

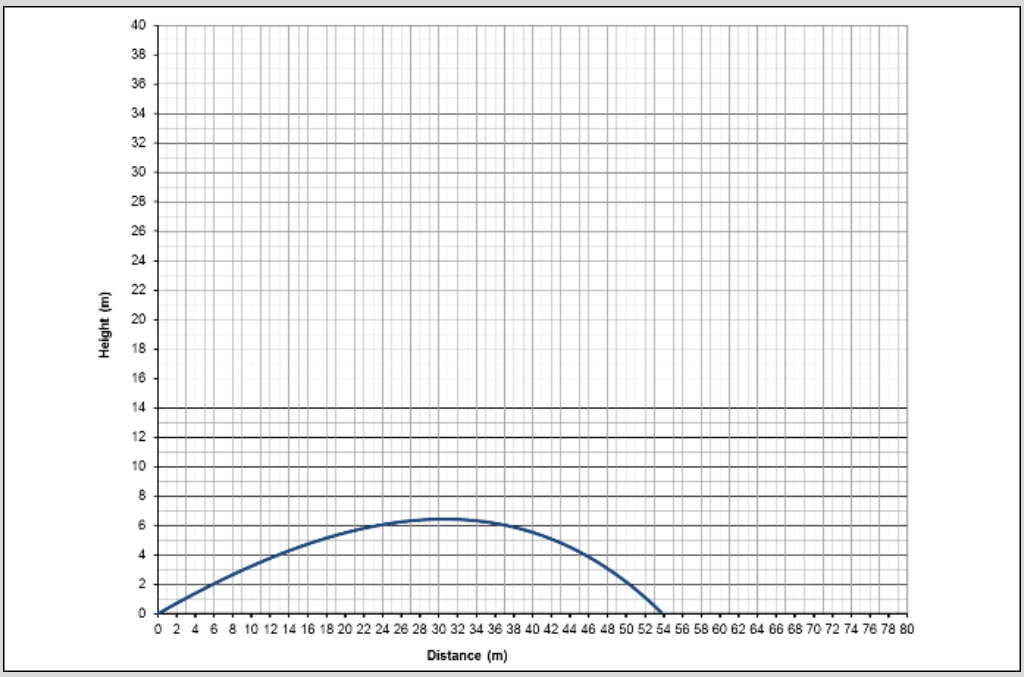

30 ° @ 40 m/s

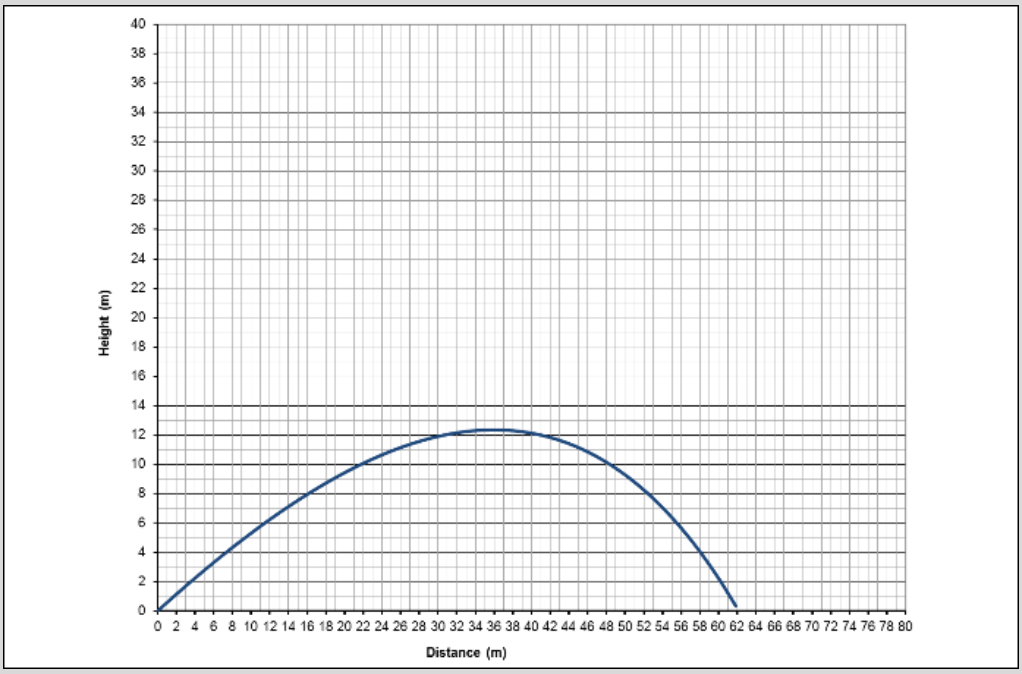

LABOSPORT LTD
Unit 3 Aerial Way, Hucknall, Nottinghamshire, NG15 6DW
+44 (0) 115 968 1998
info@labosport.co.uk

This report contains 11 pages, it may not be used for commercial purposes unless it is reproduced in its entirety

40 ° @ 40 m/s

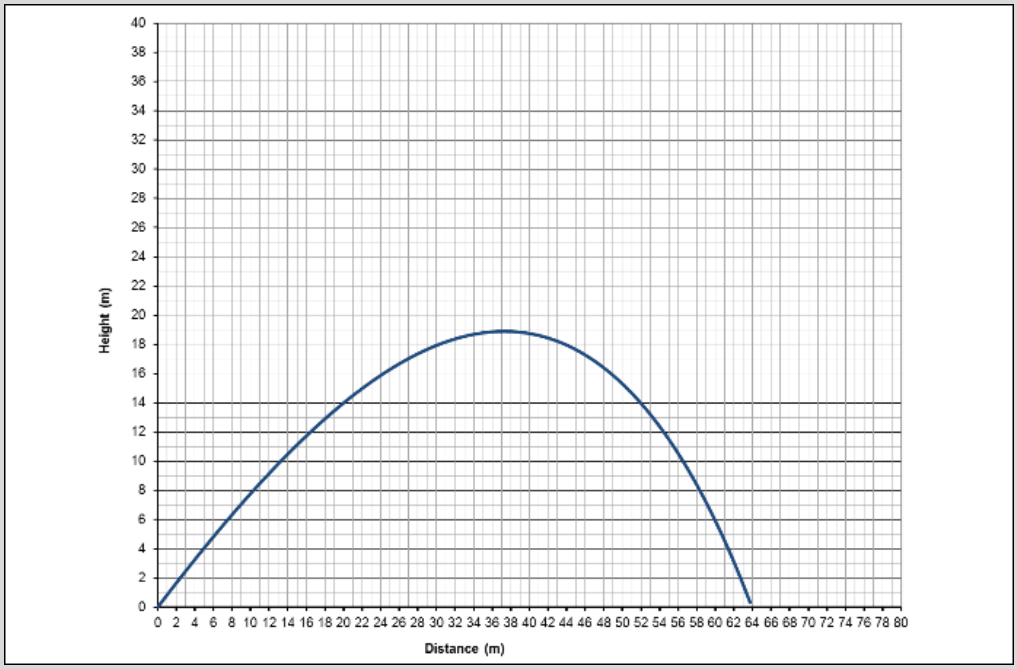

This report contains 11 pages, it may not be used for commercial purposes unless it is reproduced in its entirety

Mowbray, North Horsham, West Sussex (Phase 2)
Technical Note
Sports Pavilion - Rainwater Harvesting Tank

1.0 Introduction

1.1 This Technical Note has been prepared by Glanville Consultants on behalf of Legal & General (Strategic Land North Horsham) in support of an application for the approval of Reserved Matters pursuant to the Outline Planning Permission, for the sports pavilion and associated parking and landscaping within the North Horsham masterplan. It has been prepared in relation to the proposed rainwater harvesting tank system.

1.2 Horsham District Council's (HDC) Environmental Health and Licensing team responded to the Reserved Matters application on 16 November 2023. The full response is included in Appendix A. HDC's Environmental Health and Licensing team did not have an objection but did request further information relating to the design and maintenance of the rainwater harvesting tank system.

1.3 The applicant submitted additional details to address these comments, provided by the manufacturer of the rainwater harvesting system, SPEL. The additional details submitted are provided in Appendix B.

1.4 Subsequently, HDC's Environmental Health and Licensing team provided a further response on 25 January 2024, which is included in Appendix C. This response stated that the information submitted did not provide sufficient detail to address the team's previous comments (16 November 2023).

1.5 This report considers and addresses each of HDC's points raised in its November 2023 response, and therefore also addresses its January 2024 response.

2.0 Response to HDC Comments

2.1 HDC's response of 16 November 2023 (Appendix A) requested the details outlined in Table 1. Table 1 also outlines how the information submitted in support of the application (Appendix B) addresses these comments and provides additional information and details, as well as referring to the following additional information:

- Appendix D: Maintenance and Management Plan
- Appendix E: Technical Layout

Table 1: Response to HDC comments

HDC Comment (16 November 2023)	**Appendix Reference**	**Details**
Detail on the likely contaminants associated with the rainwater harvesting system, including contaminants associated with the components of the proposed system.	Appendix B: SPEL Specification Project Data Sheet	Pollution, mosses, birds and rodents can leave deposits that lead to bacterial coliforms, viruses or parasites that could be dangerous for human contact.
Detail on what type of treatment that will be installed on the supply with information clearly indicating that it is appropriate for the amount of water being used and the likely contaminants.	Appendix B. SPEL Specification Project Data Sheet Viqua Datasheet	The RSDC model proposed has a mesh filter to block any solids in excess of 1mm from entering the storage tank. The RS8D system includes a Viqua VH200 disinfection system. The RS8D receives water from one of the pumps. The water passes through a 50 micron wound filter, then a 5 micron wound filter and then through the VH200 ultraviolet (UV) light disinfection unit before distribution to the water network. The filter removes particles and the UV action kills any germs that are present making the treated water safe for human contact. The flow rate of the pump is designed to be in the region of 40 litres/minute and would not be anticipated to exceed 60 litres/minute. The VH200 UV treatment system is capable of safely treating up to 60 litres/minute.

HDC Comment (16 November 2023)	**Appendix Reference**	**Details**
Detail on the proposed sampling and testing regime, undertaken in accordance with Private Water Supplies (England) Regulations 2016 (or subsequent superseding equivalent), and taking into account the likely contaminants, as detailed above, along with detail on how any failure of any samples will be investigated and managed.	Appendix B: SPEL Specification Project Data Sheet Appendix D: Maintenance and Management Plan	An organisation with experience in testing stored water would be employed to attend site annually to sample and test water in accordance with the Private Water Supplies (England) Regulations 2016 (or subsequent superseding equivalent). A legionella risk assessment might form part of their report. If the system is out of use for a period, then the testing company would be brought in early to assess if there are any issues and treat any stored water with suitable chemicals. Any test failures would be investigated and managed appropriately in accordance with all relevant regulations.
Detail on the maintenance, servicing and cleaning of the tanks, water treatment equipment, pumps, all pipework etc. for the lifetime of the development along with regularity of servicing/maintenance and clarification what steps will be taken in the event of equipment failure. This should include any re-activation of the system after it has been out of use due to lack of rainfall/use.	Appendix B: SPEL Specification Project Data Sheet Appendix D: Maintenance and Management Plan	Details as per appendices.
Details, including a plan or schematic, showing the supply – storage tanks, treatment etc., and means to record the total water consumption of each unit	Appendix B: • DJB 24811_003 Issue B • Data Sheet RSDC Rainsave Filter • Rainsave Layout Direct Rev B Appendix E: • Technical Layout	Details as per appendices. A sub-meter will be installed to record water consumption.

HDC Comment (16 November 2023)	**Appendix Reference**	**Details**
Detail on the continuity of supply during dry periods extending beyond 35 days.	Appendix B: SPEL Specification Project Data Sheet	The system includes a solenoid valve that will activate when water levels are low in the storage tank due to dry periods or heavy usage. This will allow top-up water to flow into the underground tank and continue supply. Top-up water will not come directly from the mains supply, to avoid the possibility of contaminating to the mains supply with stored water. Mains water will be fed indirectly via a header tank, tundish or similar, to allow an air gap between stored and mains water.
Arrangements for keeping written records of all sampling, results of analysis, inspection, cleaning, and maintenance.	Appendix B: SPEL Specification Project Data Sheet Appendix D: Maintenance and Management Plan	Suitable records of system testing, cleaning, maintenance and site-specific requirements will be undertaken. Record sheets would note testing dates, servicing dates, equipment replaced, what treatment is used and when, how much water is consumed. An example record sheet is included in the maintenance and management plan included in Appendix D.

3.0 Conclusions

3.1 This Technical Note has been prepared in support of an application for the approval of Reserved Matters pursuant to the Outline Planning Permission, for the sports pavilion and associated parking and landscaping within the North Horsham masterplan.

3.2 The note has considered and responded to each of the points raised by Horsham District Council (HDC) Environmental Health and Licensing department in its statutory consultee responses of 16 November 2023 and 25 January 2024 to the Reserved Matters application, providing the details requested.

3.3 It is therefore concluded that the information submitted in support of the planning application is sufficient to address HDC's comments.

Appendix A

Horsham District Council
Environmental Health and Licensing
Consultation Response
16 November 2023

HORSHAM DISTRICT COUNCIL CONSULTATION

TO:	Development Control
FROM:	Environmental Health and Licensing
REFERENCE:	DC/23/1980
LOCATION:	Wimland Road, Faygate, West Sussex
DESCRIPTION:	Application for approval of Reserved Matters pursuant to Condition 5 of Outline Planning Permission reference DC/16/1677 for the Sports Pavilion.
RECOMMENDATION:	Objection

MAIN COMMENTS:

Proposed Water Supply

1. We have reviewed the RPS – 'Technical Note: Water Use Requirements – New Sports Centre and Water Offsetting against Credits' and we note that a rainwater harvesting system is proposed to supply non-potable water to the development. With this in mind our interpretation of the technical guidance from the Drinking Water Inspectorate (DWI) is that should water from a rainwater harvesting system be used for non-potable uses then it should still be subject to appropriate treatment and testing.
2. Rainwater harvesting schemes can be highly contaminated, to provide the LPA with sufficient confidence that the rainwater harvesting scheme will be maintained and managed for the lifetime of the development a detailed private water supply management and maintenance plan will therefore need to be submitted support of the application. This plan should be provided by a suitably competent and qualified consultant who specialises in private water supplies and include, but not necessarily be limited to, the following information:

- Detail on the likely contaminants associated with the rainwater harvesting system, including contaminants associated with the components of the proposed system.
- Detail on what type of treatment that will be installed on the supply with information clearly indicating that it is appropriate for the amount of water being used and the likely contaminants.
- Detail on the proposed sampling and testing regime, undertaken in accordance with Private Water Supplies (England) Regulations 2016 (or subsequent superseding equivalent), and taking into account the likely contaminants, as detailed above, along with detail on how any failure of any samples will be investigated and managed.
- Detail on the maintenance, servicing and cleaning of the tanks, water treatment equipment, pumps, all pipework etc for the lifetime of the development along with regularity of servicing/maintenance and clarification what steps will be taken in the event of equipment failure. This should include any re-activation of the system after it has been out of use due to lack of rainfall/use.
- Details, including a plan or schematic, showing the supply – storage tanks, treatment etc, and means to record the total water consumption of each unit
- Detail on the continuity of supply during dry periods extending beyond 35 days.
- Arrangements for keeping written records of all sampling, results of analysis, inspection, cleaning, and maintenance.

Summary

Given the above we are of the view that the application is currently insufficiently detailed to be determined.

Suggested Conditions

N/A

NAME:	Kevin Beer
DEPARTMENT:	Environmental Health and Licensing
DATE:	16/11/2023

Appendix B

Rainwater Harvesting Tank Information Submitted to Planning

Specification Project Data Sheet – Rainwater Harvesting Treatment

Project Name: Sports Club, Mowbray, Horsham **Ref:** 24811

Client: L&G / Glanville **Quote Ref:** 24811/002

Site Designation/Area: Rainwater Harvesting Tank

Introduction: This document is to provide a technical submission to accompany the product quotation as listed above with reference to the various water treatment elements included and processes recommended.

Products: RSDC RainSave debris filter chamber and RS300/13650 RainSave storage tank with RS8D RainSave system.

Media: Rainwater from roof areas

Possible contaminants: Water collected from roofs is typically cleaner than other surface water areas, but pollution, mosses, birds and rodents can leave deposits that lead to bacterial coliforms, viruses or parasites that could be dangerous for human contact.

Treatment of Harvested Rainwater – Pre Storage Tank: The RSDC model proposed has a mesh filter to block any solids in excess of 1mm from entering the storage tank.

Treatment of Harvested Rainwater – Storage Tank: The storage tank has a calming pipework arrangement that directs flows to the bottom of the tank and limits disturbance of any accumulated settlement. The pumps are fitted with a floating inlet strainer, where the 1mm strainer floats below the surface to avoid floatable and settled debris.

Treatment of Harvested Rainwater – Post Storage Tank: The RS8D system includes a Viqua VH200 disinfection system (see attached data sheet). The RS8D receives water from one of the pumps. The water passes through a 50 micron wound filter, then a 5 micron wound filter and then through the VH200 ultraviolet (UV) light disinfection unit before distribution to the water network. The filter removes particles and the UV action kills any germs that are present making the treated water safe for human contact.

Specification Project Data Sheet – Rainwater Harvesting Treatment

Project Name: Sports Club, Mowbray, Horsham **Ref:** 24811

Continued…page 2 of 3

Treatment flow rate: The flow rate of the pump is designed to be in the region of 40 litres/minute and would not be anticipated to exceed 60 litres/minute. The VH200 UV treatment system is capable of safely treating up to 60 litres/minute.

RSDC filter cleaning: The stainless-steel filter unit in the RSDC chamber will need periodic cleaning. The overflow pipe system will allow some debris to wash into waste and so necessary cleaning is kept to a minimum. Cleaning should be undertaken at least annually and may be more frequent if required.

Storage tank cleaning: The fibreglass storage tank will require periodic cleaning. Cleaning should be at least annual and may be more frequent if required. The tank will not rust and requires no periodic corrosion protection. The tank will gather sediments over time and these can be removed by suction tanker or similar.

Filter replacement: Wound cartridge filters will need periodic replacement at least annually, but possible more frequently if water is dirtier. The proposed system includes an alarm to indicate that filters are blocked.

UV lamp replacement: UV lamps will need replacing each year and the system is equipped with an alarm to indicate when a year of service has been completed. A further alarm is also included that indicates if the level of UV light being used has fallen below safe levels which may indicate a necessary cleaning of the quartz tube.

System flushing: Unlike chlorinated water, UV treated roof water does not carry any residual disinfectant. For this reason, following initial installation, or after prolonged periods of inactivity, it is recommended that the pipework system is flushed through. This might be undertaken by adding a suitable chemical bleach solution to the water in the storage tank and running the system to waste for a suitable time.

Specification Project Data Sheet – Rainwater Harvesting Treatment

Project Name: Sports Club, Mowbray, Horsham **Ref:** 24811

Continued…page 3 of 3

System Plan: Details of the system elements and typical layout are provided to suit.

Top-up water: The system includes a solenoid valve that will activate when water levels are low in the storage tank due to dry periods or heavy usage. This will allow top-up water to flow into the underground tank and continue supply. Top-up water should not come directly from the mains supply, to avoid the possibility of contaminating to the mains supply with stored water. Mains water can be fed indirectly via a header tank, tundish or similar, to allow an air gap between stored and mains water.

Water testing: Water testing might be undertaken periodically and should be organised by the client according to their prevailing procedures.

Records: Suitable records of system testing, cleaning, maintenance and site-specific requirements should be organised by the client according to their prevailing procedures.

D. J. Bailey (BEng)
On behalf of SPEL Products
23rd November 2023

SPEL Products
Lancaster Road, Shrewsbury,
Shropshire SY1 3NQ. England.
Telephone: +44 (0)1743 445200
Facsimile: +44 (0)1743 465442
Email: info@spelproducts.co.uk
www.spelproducts.co.uk

CUSTOMER INFORMATION

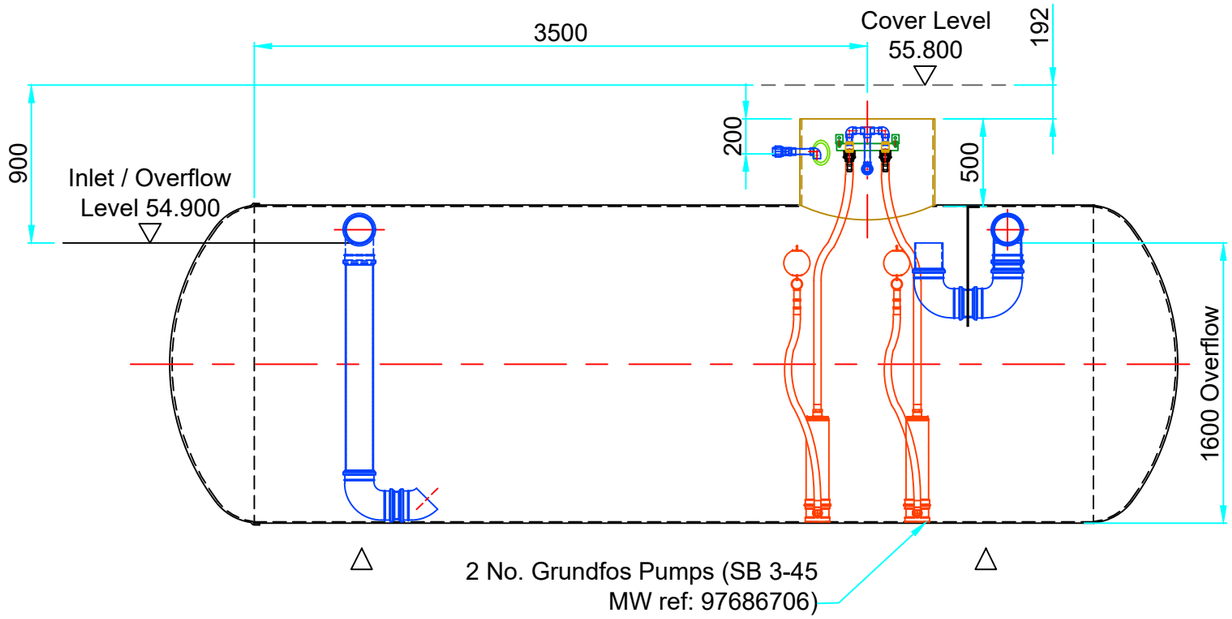

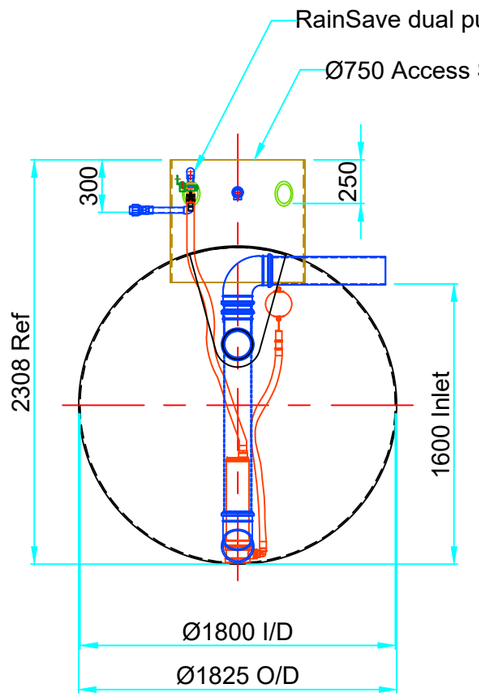

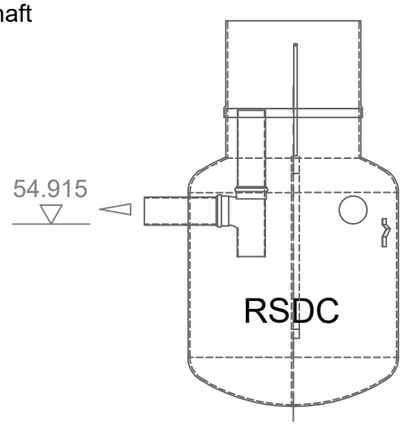

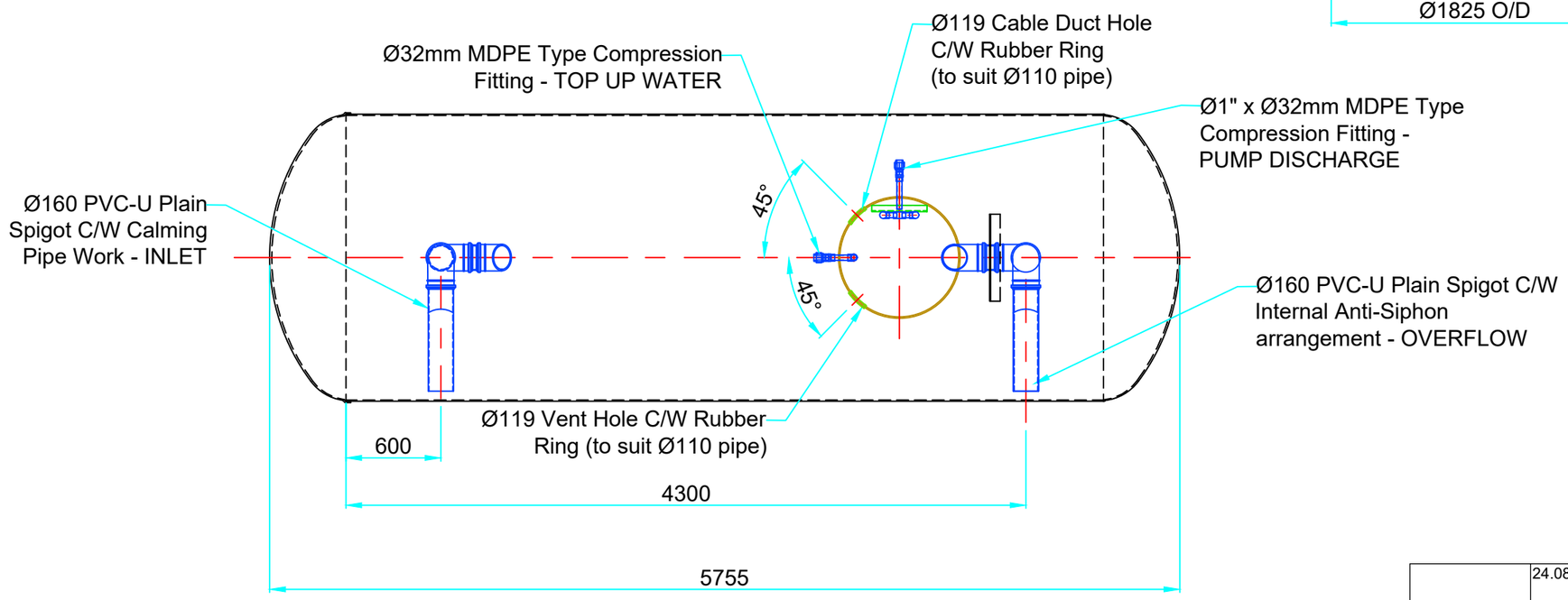

Key to Symbols: △ Lifting Point | ○ ○ Hold- down strap rib locations where mechanical anchoring is required | Manufacturing Joint | ◯ BoQ's reference no.

	24.08.23	B	Inlet and overflow now Ø160 and re-positioned, access shaft height now 500mm, Site levels amended, siphon added to overflow. Issued for customer INFORMATION		
	18.07.23	A	Issued for customer INFORMATION		
Distribution	Date	Rev	Issued only for purpose indicated	Date	Appr'd

This drawing is confidential and must not be copied, reproduced or passed to a third party without written permission from
SPEL PRODUCTS

DIMENSIONS ARE SUBJECT TO DIMENSIONAL TOLERANCES. If critical, check physically prior to installation

Water table & Burial Depth: The customer must check tank specification is compatible with ground water table level (in winter) and burial depth. If in doubt refer to SPEL Data Manual Section 13 or contact SPEL Products Sales or Technical Department

Title: SPEL 300 Series Underground RainSave Tank

Contract: L&G (Strategic Land North Horsham) Ltd Mowbray, Horsham, W Sussex - Sports Hub - Rainwater Harvesting Tank
Order No.:

Capacity 13,650 Ltrs.

Tank Specification Standard

Laminate Specification GP

All sizes in mm
If in doubt ASK!

SPEL Products
Lancaster Road, Shrewsbury
Shropshire, SY1 3NQ, England
Telephone: +44 (0)1743 445200
Facsimile: +44 (0) 1743 465442

Drawn NP
Checked DJB
Date 18.07.23
Scale 1:35 - Sheet A3

Internal Customer Ref
DJB 24811/003

Drawing No.
DJB 24811_003

Rev
B

DRAWING APPROVAL
Date
Approved By (Print)
Signed

Access shaft to be extended to suit pipe depth.

Ø750 Access Shaft

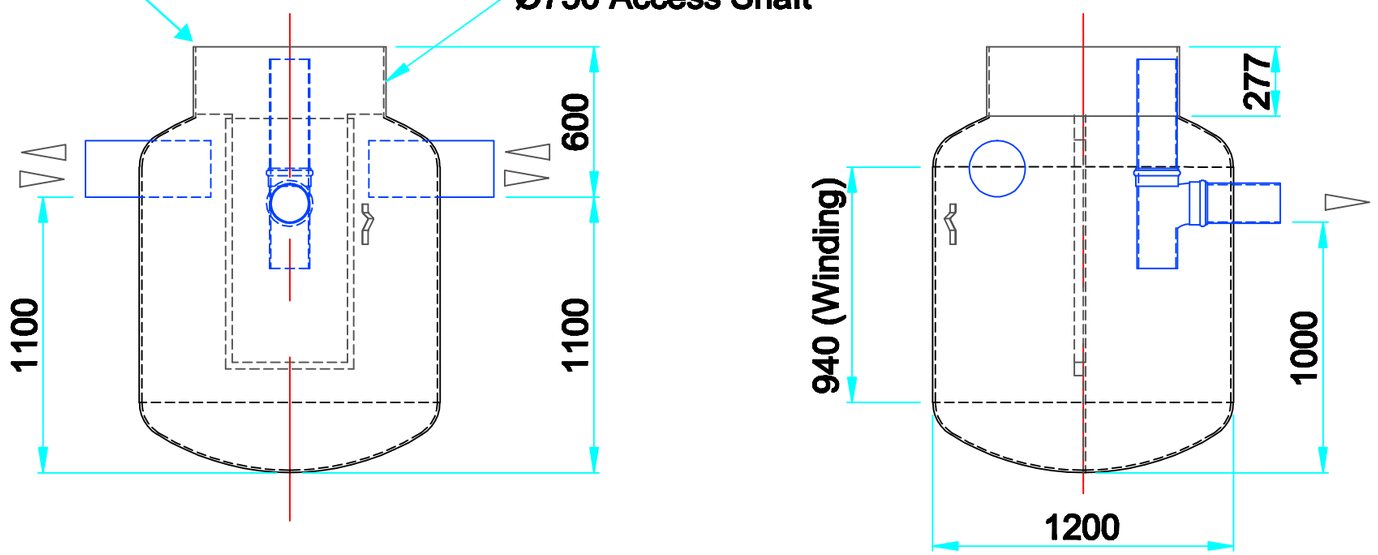

Removable 1.25mm x 1.25mm x Ø0.4mm Stainless Steel Woven Wire Mesh Filter Panel

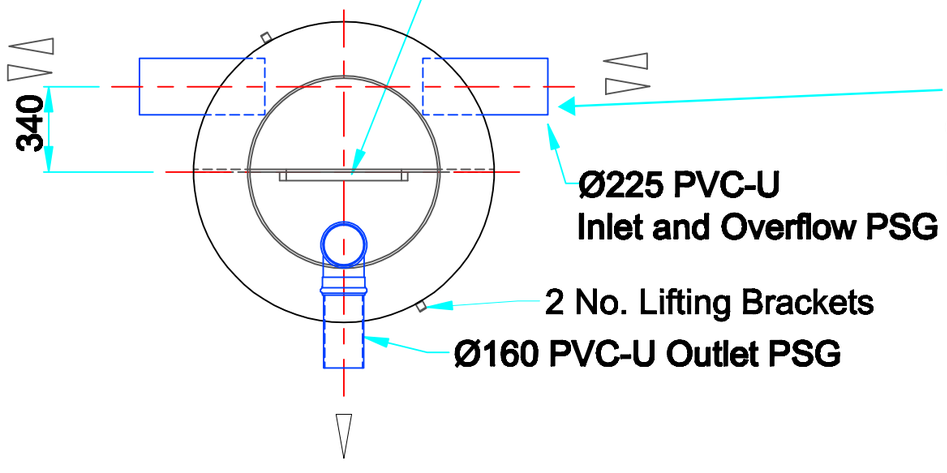

Pipe sizes (160, 225 or 300mm) and positions can be adjusted to suit. An overflow pipe is highly recommended.

Ø225 PVC-U Inlet and Overflow PSG

2 No. Lifting Brackets

Ø160 PVC-U Outlet PSG

Key to Symbols: △ Lifting Point | ∘ | ∘ Hold- down strap rib locations where mechanical anchoring is required | Manufacturing Joint | ◯ BoQ's reference no.

	-				
	-				
	-				
	—				
Distribution	Date	Rev	Issued only for purpose indicated	Date	Appr'd

This drawing is confidential and must not be copied, reproduced or passed to a third party without written permission from SPEL PRODUCTS

DIMENSIONS ARE SUBJECT TO DIMENSIONAL TOLERANCES. If critical, check physically prior to installation

Water table & Burial Depth: The customer must check tank specification is compatible with ground water table level (in winter) and burial depth. If in doubt refer to SPEL Data Manual Section 4 or contact SPEL Products Sales or Technical Department

Title: SPEL RainSave Silt/Debris Chamber Model RSDC 15-50 (15-50 L/S Flows)

Contract: —

Capacity --

Tank Specification —

Laminate Specification GP

All sizes in mm If in doubt ASK!

SPEL Products
Lancaster Road, Shrewsbury
Shropshire, SY1 3NQ, England
Telephone: +44 (0)1743 445200
Facsimile: +44 (0) 1743 465442

Drawn RJP

Checked --

Date 27/03/09

Scale 1:25 Sheet A3

Internal Ref —

Drawing No. —

Rev A

DRAWING APPROVAL
Date
Approved By (Print)
Signed

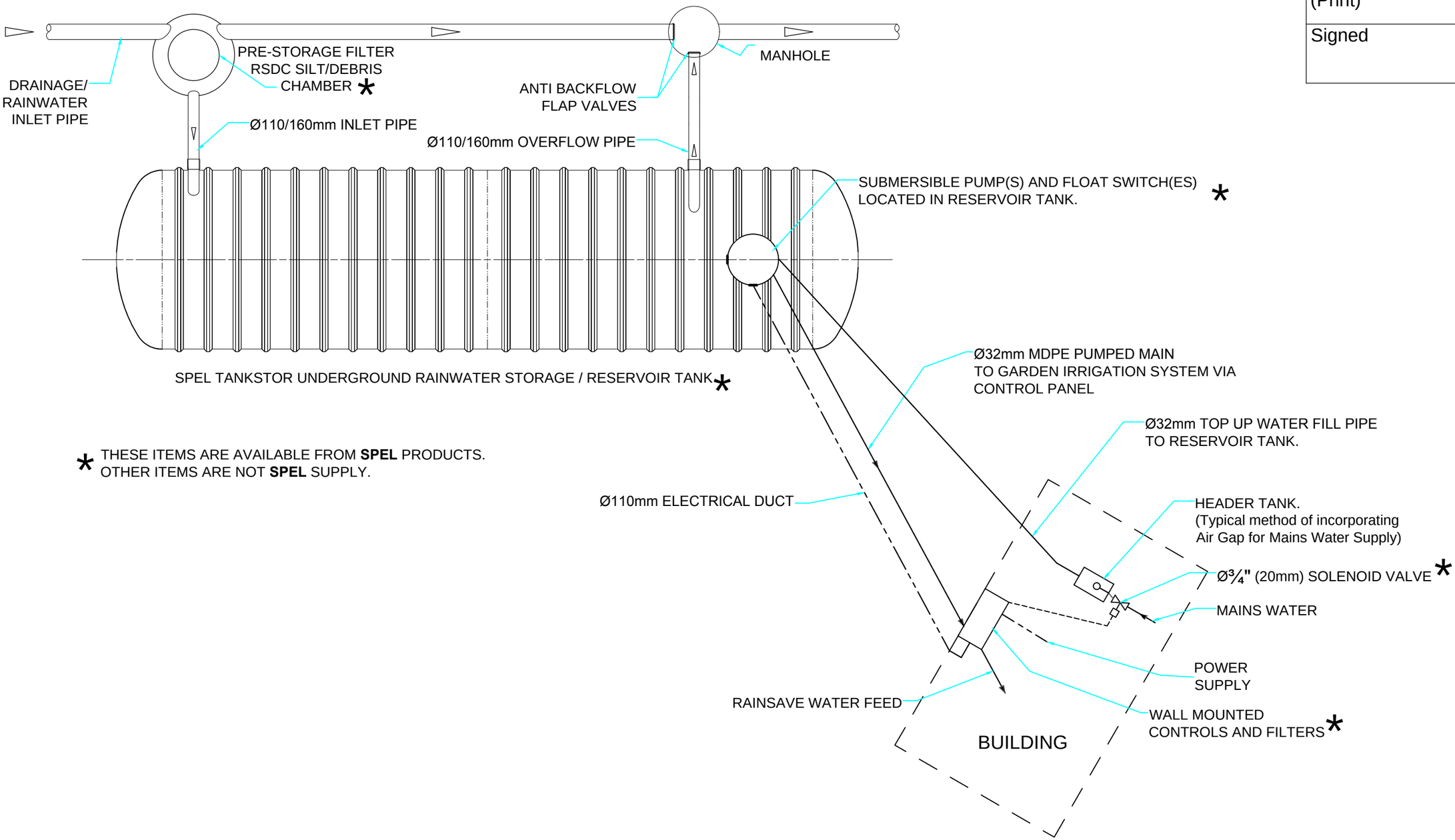

* THESE ITEMS ARE AVAILABLE FROM **SPEL** PRODUCTS. OTHER ITEMS ARE NOT **SPEL** SUPPLY.

Key to Symbols: △ Lifting Point | Hold- down strap rib locations where mechanical anchoring is required | Manufacturing Joint | ◯ BoQ's reference no.

Distribution	Date	Rev		Date	Appr'd
	06.07.16	B	Ø¾" Solenoid Valve Repositioned.		

This drawing is confidential and must not be copied, reproduced or passed to a third party without written permission from SPEL PRODUCTS

DIMENSIONS ARE SUBJECT TO DIMENSIONAL TOLERANCES. If critical, check physically prior to installation

Water table & Burial Depth: The customer must check tank specification is compatible with ground water table level (in winter) and burial depth. If in doubt refer to SPEL Data Manual Section 4 or contact SPEL Products Sales or Technical Department

Title: SPEL Tankstor

Contract: Typical Rainsave Layout - Direct Feed

Capacity	Tank Specification	Laminate Specification
----	----	--

All sizes in mm If in doubt ASK!

SPEL Products
Lancaster Road, Shrewsbury
Shropshire, SY1 3NQ, England
Telephone: +44 (0)1743 445200
Facsimile: +44 (0) 1743 465442

Drawn	Checked	Date	Scale
JD		Dec. 2006	NTS

Internal Ref	Drawing No.	Rev
----	---	B

S5Q-PA, S8Q-PA, VH200, VH410 & VH410M

Ultraviolet Water Disinfection Systems from VIQUA

The quality of drinking water can change with time and become contaminated with harmful bacteria. The VIQUA **HOME family** of compact UV disinfection systems provide a **reliable**, **economical,** and **chemical-free** way to safeguard drinking water in any residential application. VIQUA's range of products have been designed and tested to ensure quality drinking water is at everyone's finger tips.

Regardless of your need, there is a VIQUA system to suit your requirements. VIQUA offers systems that range in flow rates from just 6 GPM for a small home or cottage, up to 18 GPM for a larger home or small business.

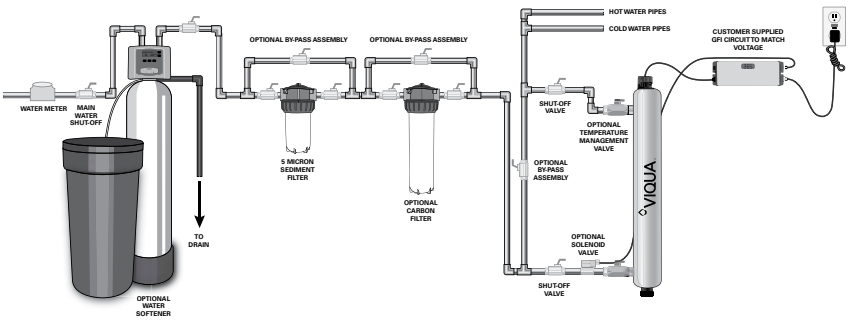



Features of VIQUA UV water disinfection systems

- Equipped to inactivate chlorine-resistant parasites such as **Cryptosporidium** and **Giardia**, harmful bacteria like *E.Coli*, and viruses not visible to the naked eye.
- Specially designed and tested Sterilume™-EX and -HO lamps provide **consistent and reliable** ultraviolet output over the entire life of the lamp (9000 hours) to ensure continuous purification.
- The system is simple to maintain and service allowing for easy lamp replacement.
- Built with a **durable stainless steel chamber** to prolong life and eliminate ultraviolet light degradation.
- Safety-Loc™ connector with interlock that ensures power is disconnected before lamp can be removed.
- The controller visually displays the remaining lamp life and will go into alarm if the lamp fails. Monitored systems are equipped with a UV sensor which provides a continuous readout of UV intensity.
- Monitored systems allow for the installation of an optional solenoid valve which will stop the flow of water through the chamber should the UV performance fall below a safe level.

Specifications

					
MODEL	S5Q-PA	S8Q-PA	VH200	VH410	VH410M
FLOW RATES (@ 95% UVT)					
US Public Health (16 mJ/cm²)	11 GPM (42 lpm) (2.5 m³/hr)	19 GPM (72 lpm) (4.3 m³/hr)	16 GPM (60 lpm) (3.6 m³/hr)	34 GPM (130 lpm) (7.8 m³/hr)	34 GPM (130 lpm) (7.8 m³/hr)
VIQUA Standard (30 mJ/cm²)	6 GPM (23 lpm) (1.4 m³/hr)	10 GPM (38 lpm) (2.3 m³/hr)	9 GPM (34 lpm) (2.0 m³/hr)	18 GPM (70 lpm) (4.2 m³/hr)	18 GPM (70 lpm) (4.2 m³/hr)
NSF/EPA (40 mJ/cm²)	4.5 GPM (17 lpm) (1.0 m³/hr)	8 GPM (29 lpm) (1.8 m³/hr)	7 GPM (26 lpm) (1.6 m³/hr)	14 GPM (54 lpm) (3.3 m³/hr)	14 GPM (54 lpm) (3.3 m³/hr)
DIMENSIONS					
Chamber	22″ x 2.5″ (56.1 cm x 6.5 cm)	35.5″ x 2.5″ (90.4 cm x 6.5 cm)	17.75″ x 3.5″ (45 cm x 8.9 cm)	23.5″ x 3.5″ (59.6 cm x 8.9 cm)	23.5″ x 3.5″ (59.6 cm x 8.9 cm)
Controller	7.25″ x 3.25″ x 2.5″ (18.6 cm x 8.1 cm x 6.4 cm)	7.25″ x 3.25″ x 2.5″ (18.6 cm x 8.1 cm x 6.4 cm)	7.25″ x 3.25″ x 2.5″ (18.6 cm x 8.1 cm x 6.4 cm)	7.25″ x 3.25″ x 2.5″ (18.6 cm x 8.1 cm x 6.4 cm)	9.25″ x 3.25 x 2.5″ (24 cm x 8.1 cm x 6.9 cm)
Inlet/Outlet Port Size	3/4″ MNPT*	3/4″ MNPT*	3/4″ - 1″ MNPT COMBO*	3/4″ - 1″ MNPT COMBO*	3/4″ - 1″ MNPT COMBO*
Shipping Weight	8 lbs (3.6 kg)	11 lbs (5 kg)	12 lbs (5.4 kg)	17 lbs (7.7 kg)	17 lbs (7.7 kg)
ELECTRICAL					
Voltage	100-240V / 50/60 Hz	100-240V / 50/60 Hz	100-240V / 50/60 Hz	100-240V / 50/60 Hz	100-240V / 50/60 Hz
Power Consumption	30 W	46 W	35 W	60 W	60 W
Maximum Operating Pressure	125 psi (8.62 bar)	125 psi (8.62 bar)	125 psi (8.62 bar)	125 psi (8.62 bar)	125 psi (8.62 bar)
Influent Water Temperature	2-40°C (36-104°F)	2-40°C (36-104°F)	2-40°C (36-104°F)	2-40°C (36-104°F)	2-40°C (36-104°F)
FEATURES					
Visual "Power On"	YES	YES	YES	YES	YES
Chamber Material	304 SS	304 SS	304 SS	304 SS	304 SS
Visual Lamp Life Remaining	YES	YES	YES	YES	YES
Audible Lamp Life Failure	YES	YES	YES	YES	YES
Audible Lamp Replacement Reminder	YES	YES	YES	YES	YES
UV Sensor	NO	NO	NO	NO	YES

* /2B - BSP

Replacement Parts

S463RL – UV lamp for S5Q-PA	**QS-463** – quartz sleeve for S5Q-PA
S810RL – UV lamp for S8Q-PA	**QS-810** – quartz sleeve for S8Q-PA
S200RL-HO – UV lamp for VH200	**QS-001** – quartz sleeve for VH200
S410RL-HO – UV lamp for VH410 & VH410M	**QSO-410** – quartz sleeve for VH410 & VH410M
QL-200 – quartz sleeve, UV lamp combo pack for VH200	**410867** – o-ring for quartz sleeves
QL-410 – quartz sleeve, UV lamp combo pack for VH410 & VH410M	**RN-001** – retaining nut for all systems
S463-QL – quartz sleeve, UV lamp combo pack for S5Q-PA	**RN-001/1** – retaining nut with plug for all systems
S810-QL – quartz sleeve, UV lamp combo pack for S8Q-PA	**BA-ICE-S** – electronic ICE controller for S5Q-PA and S8Q-PA
BA-ICE-CM – electronic ICE controller VH410M	**BA-ICE-CL** – electronic ICE controller for VH200, VH410

Water Quality Parameters

Hardness	Iron	Tannins
< 7 grains (120 mg/L)	< 0.3 mg/L	< 0.1 mg/L

S5Q-PA, S8Q-PA, VH200, VH410, & VH410M DOSE CURVES

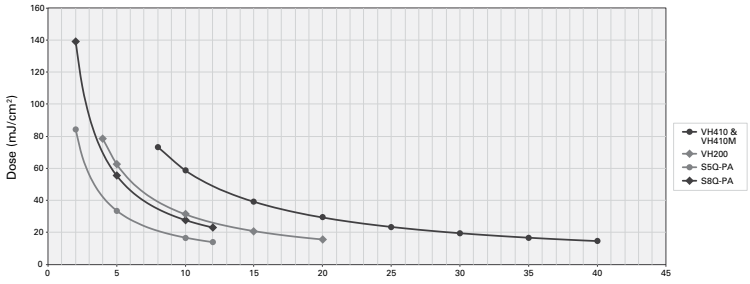

VIQUA™
425 Clair Rd. W, Guelph, Ontario, Canada N1L 1R1
t. 1.519.763.1032 • f. 1.519.763.5069 • tf. 1.800.265.7246 (US/CAN)
t. +31.73.747.0144 (EUR) info@viqua.com • **www.viqua.com**

LIT-520329-R_RevD © 2018 VIQUA - a Division of Trojan Technologies Group ULC

Appendix C

Horsham District Council
Environmental Health and Licensing
Consultation Response
24 January 2024

HORSHAM DISTRICT COUNCIL CONSULTATION

TO:	Development Control
FROM:	Environmental Health and Licensing
REFERENCE:	DC/23/1980
LOCATION:	Wimland Road, Faygate, West Sussex
DESCRIPTION:	Application for approval of Reserved Matters pursuant to Condition 5 of Outline Planning Permission reference DC/16/1677 for the Sports Pavilion.
RECOMMENDATION:	Further information required

MAIN COMMENTS:

Proposed Water Supply

1. We have reviewed the SPEL 'Specification Project Data Sheet – Rainwater Harvesting Treatment', and related supporting information, and we have the following comments to make.
2. The above document does not provide sufficient detail on the points raised in our formal comments dated 16.11.23 with some of the points raised not detailed at all. In our view this document is therefore insufficiently detailed.
3. As stated in our previous comments – rainwater harvesting schemes can be highly contaminated, the LPA therefore require sufficient confidence prior to determination that the rainwater harvesting scheme will be maintained and managed for the lifetime of the development by way of a detailed private water supply management and maintenance plan. This plan should be provided by a suitably competent and qualified consultant who specialises in private water supplies.

Suggested Conditions

N/A

NAME:	Kevin Beer
DEPARTMENT:	Environmental Health and Licensing
DATE:	25/01/2024

Appendix D

Management and Maintenance Plan

Mowbray, North Horsham, West Sussex (Phase 2)
Sports Pavilion – Rainwater Harvesting Tank
Management and Maintenance Plan

1.1 This plan details the type and frequency of maintenance activities for the rainwater harvesting tank which serves the Sports Pavilion within the Mowbray, North Horsham development.

1.2 This Management and Maintenance Plan does not constitute a complete maintenance schedule and should be developed at the appropriate design stage, taking into account advice and recommendations from system manufacturers and installers. Appropriate health and safety measures should also be put in place.

1.3 Table 1 sets out typical maintenance activities, and their frequency. An annual service will be undertaken, and parts of the system are recommended to be checked on a more frequent basis over the first year of use to assess whether maintenance activities need to be undertaken on a more or less frequent basis.

Table 1: Typical Maintenance Activities

Item	Activity	Inspection Frequency	Activity Notes	Activity Frequency
RSDC Filter	Cleaning	Six monthly for the first year, then annually or as required.	The overflow pipe system will allow some debris to wash into waste and so necessary cleaning is kept to a minimum.	Annually, or more frequently as required.
	Replacement	None. The proposed system includes an alarm to indicate that filters are blocked.	Wound cartridge filters will need replacement more frequently if water is dirtier.	Annually, or more frequently as required.
Storage tank	Cleaning	Six monthly for the first year, then annually or as required.	The tank will not rust and requires no periodic corrosion protection. The tank will gather sediments over time and these can be removed by suction tanker or similar.	Annually, or more frequently as required.
UV Lamp	Replacement	None. The system is equipped with an alarm to indicate when a year of service has been completed.	-	Annually.

Item	Activity	Inspection Frequency	Activity Notes	Activity Frequency
	Cleaning of quartz tube.	None. An alarm is included that indicates if the level of UV light being used has fallen below safe levels which may indicate a necessary cleaning of the quartz tube.	-	As required.
System	Flushing	-	Unlike chlorinated water, UV treated roof water does not carry any residual disinfectant. This might be undertaken by adding a suitable chemical bleach solution to the water in the storage tank and running the system to waste for a suitable time	Following initial installation, and after prolonged periods of inactivity.
Water Sampling and Testing	An organisation with experience in testing stored water would be employed to attend site annually to sample and test water in accordance with the Private Water Supplies (England) Regulations 2016 (or subsequent superseding equivalent). A legionella risk assessment might form part of their report. If the system is out of use for a period, then the testing company would be brought in early to assess if there are any issues and treat any stored water with suitable chemicals. Any test failures would be investigated and managed appropriately in accordance with all relevant regulations.			Annually.

1.4 Suitable records of system testing, cleaning, maintenance and site-specific requirements will be undertaken. Table 2 provides an example record sheet for inspection, testing and maintenance activities.

Table 2: Example Record Sheet

Item	**Debris filter**	**Tank**	**Disinfection**	**Storage Areas (e.g. toilet system tanks)**
Testing Date				
Tests Undertaken				
Test Results				
Servicing Date				
Equipment Replaced				
Equipment Cleaned				
Water Consumption				

Appendix E

Technical Layout

GOAL RECESS

FFL 56.350

DRAINAGE AROUND PAVILION IN ABEYANCE. SVP AND RWP POSITIONS TO BE CONFIRMED.

F1 (IC)
CL 56.290
IL 55.540 (100Ø)

RE
CL 56.315
IL 55.715 (100Ø)

RE
CL 56.250
IL 55.850 (100Ø)

F3.2 (IC)
CL 56.335
IL 55.300 (100Ø)

F1.000 / 1:60 / 100Ø / 35.1m / Plastic

S3.005 / 1:80 / 100Ø / 36.3m / Plastic

S3.004 / 1:80 / 100Ø / 19.1m / Plastic

F1.001 / 1:60 / 100Ø / 18.4m / Plastic

S3.4 (ST)
CL 56.300
IL 55.260 (100Ø)

F2 (IC)
CL 56.275
IL 54.955 (100Ø)

(ST)
CL 56.195
IL 54.945

90mm HPPE (PE100) SDR17

S3.2 (SPEL filter chamber - refer to SPEL drawing DJB/24811/003 for details)
CL 55.950
IL 54.915 (150Ø)

(ST)
CL 56.100
IL 54.645

S3.003 / 1:120 / 150Ø / 6.5m / Plastic

S3.006 / 1:42 / 100Ø / 36.6m / Plastic

F2.000 / 1:49 / 100Ø / 34.4m / Plastic

S3.3 (ST)
CL 56.150
IL 55.020 (100Ø)
IL 54.970 (150Ø)

F3 (IC)
CL 56.175
IL 54.650 (100Ø)
IL 54.600 (100Ø)

S3.1 (ST)
CL 55.700
IL 54.890 (150Ø)

F1.002 / 1:8 / 100Ø / 9.6m / Plastic

S3.002 / 1:120 / 150Ø / 2.9m / Plastic

S3.000 / 1:282 / 300Ø / 57.8m / Plastic

S3.001 / 1:6 / 100Ø / 13.3m / Plastic

SPEL rainwater harvesting tank. Refer to SPEL drawing DJB/24811/003.

F15 (PUMP STATION)
CL 55.425 - 55.600
IL 53.420 (INLET)
IL 54.175 (OUTLET)
Refer to TT Pumps Quotation QC11472

KIOSK
Refer to TT Pumps Quotation QC11472

RHT

COAC

1:150

1:130

Scale = 1:250 @ A1

NOTES

1. This drawing is to be read in conjunction with all other drawings and specifications.
2. Any discrepancies found between information shown on this or any other drawing shall be reported to the Engineer immediately and prior to works commencing on site.
3. Dimensions to be scaled from this drawing for planning pruposes only.
4. All works to be to Building Regulations Part H and Part M (Vol. 2).
5. This drawing details below ground drainage. For above ground drainage, refer to the Architect's detailed drawings.
6. Refer to the Architect's layouts for setting out of SVPs and RWPs.
8. All stack connections under buildings to be 100mmØ at minimum gradient of 1 in 40 (SVP) or 1 in 30 (FS) unless otherwise noted.
9. Where pipe diameters and gradients are not shown, foul water pipes to be 100mm laid at a minimum gradient of 1:60 with surface water pipes to be 100mm laid at minimum gradient of 1:80, unless otherwise noted.
11. All private pipework to be plastic or vitrified clay. Plastic pipes to comply with BS EN 13476 and WS 4-25-01 v2 and withstand a minimum jetting pressure of 2,600 psi. Materials for rising main as noted on layout. Vitrified clay pipes to comply with BS EN 295. Pipes shall be BSi Kitemarked, or have equivalent third party certification as appropriate.
12. All pipework shall join at soffit level unless otherwise stated on the drawing or schedules.
13. Cover grade for chambers in accordance with 'Table C' on drawing Mowbray-GLA-CC-Ph1-D-C_1132.
14. For all other details of manholes, inspection chambers, cover sizing and specifications, refer to the drainage standard details drawings.
15. All manhole / inspection chamber covers to be installed parallel to final kerbs, edgings, paving joints or building lines as appropriate.Cover levels are approximate only. All covers to be set flush with finished surface.
16. Invert levels of existing chambers have been taken from third party information and should be confirmed onsite prior to commence of drainage works. Any discrepancies in the levels of the drainage should be reported immediately to the Engineer.
17. It is to the contractor's responsibility to ensure that all services that are affected by the works are located, marked out and protected if necessary, prior to works commencing and during construction. Trial holes are to be hand dug to locate services if necessary.
18. Existing drainage that will serve no purpose post development is to be either removed or suitably stopped up by end capping or in infilling with concrete with no hindrance to the retained system.
19. All pipework jointing and installation shall be undertaken to Manufacturer's specification utilising proprietary products where applicable.
20. All plastic drainage to be OSMA Wavin..
21. Private manholes / inspection chamber covers in block paving / slabs to be recessed with matching blocks / slabs.
22. Detailed as-built survey of all drainage to be provided upon completion for client approval.
23. Drainage system to be cleaned and CCTV survey provided for client approval prior to completion.

KEY

- Extent of proposed highway boundary.
- Existing highway boundary.
- Proposed foul water drain or private sewer. MicroDrainage pipe reference No. Direction of fall. Pipe Diameter / Gradient / Length / Material
- Proposed surface water drain or private sewer. MicroDrainage pipe reference No. Direction of fall. Pipe Diameter / Gradient / Length / Material
- Proposed foul water manhole/inspection chamber. Refer to drainage construction details for references and chamber type specifications. Perfect Manholes to be used if preferred by the contractor, refer to Drainage Construction Details. Chamber reference No. Cover level. Invert level (pipe diameter)
- Proposed surface water manhole/catchpit chamber. Refer to drainage construction details for references and chamber type specifications. Perfect Manholes to be used if preferred by the contractor, refer to Drainage Construction Details. Chamber reference No. Cover level. Invert level (pipe diameter)
- Foul water package pump station. Refer to TT Pumps drawings and specifications for details.
- Proposed route of foul water rising main from private package pump station.
- 180mm O/D HDPE SDR17 (subject to further detailed design) adoptable foul water rising main and washout chamber / air valve chamber with associated 6m wide easement (To be confirmed by Southern Water or NAV, as appropriate).
- Surface water flow control chamber, Hydro-Brake, or similar approved. Refer to drainage construction details for further details.
- Private highway precast concrete road gully detail. Gully connections to be 150mmØ Wavin OsmaDrain.
- Formpane rainwater diffuser unit 354 x 708 x 150mm deep, with number of units required.
- Medium duty Wavin drainage channel, or similar approved. Refer to drainage construction details for further details.
- Proposed bagwork headwall, refer to headwall schedule for further details.
- Proposed brickwork headwall, refer to headwall schedule for further details.
- Proposed precast concrete Althon headwall, refer to headwall schedule for further details.
- Rainwater harvesting tank. Refer to Spel drawings and specifications for details.

Rev.	Description	Date	By	Chkd
P1	First issue.	11/03/2024	CS	JB

Glanville
Survey > Plan > Engineer
Civil Engineering · Highways Engineering · Structural Engineering · Building Surveying · Transport Planning · Geomatics
Hertfordshire | Oxfordshire | Cambridgeshire | Bristol

Client : Legal & General (Strategic Land North Horsham) Ltd

Project : Mowbray (Land North of Horsham

Title : Sports Pavilion Technical Layout

Engineer : C. Salt | Date : March 2024

Director : J. Birch | Scale : 1:100 @A1

Status : PLANNING

Drawing No. MOW-GLA-SH-Ph2-D-C-1113 | Rev P1