
Old bathroom tap


Old bathroom tap


New bathroom tap


New bathroom tap


Old utility room tap


New utility room tap

OR BAS C

ORTA Tap Range
Orta Basin Mixer
with Clicker Waste Chrome



Specification	
Product Type:	Bathroom Taps
Main Construction Material:	Brass
Mount Type:	Deck
Handle Type:	Lever
Connection Inlet:	1/2" BSP Flexible Tails
Connection Outlet:	M24 Slpm Aerator
Number of Tap Holes:	1
Valve/Cartridge Type:	35mm Single Lever Cartridge
Plumbing System Requirements:	Suitable for all plumbing systems
Minimum Dynamic Pressure (bar):	0.2 bar
Maximum Dynamic Pressure (bar):	5 bar
Maximum Hot Water Temperature °C:	65°C
Maximum Static Pressure (bar):	10 bar
Flow Type:	Single
Isolation Included:	No

Features:

- Long life ceramic cartridge for added durability and ease of use
- Metal fixing nut for added durability
- Includes clicker waste
- Chrome plated to BS EN 248

Product Certifications:

WRAS

WRAS Certificate No: 2109902
WRAS Expiry Date: 30/09/2026

Water Label 5 l/min

For more products, visit our website: http://www.bristan.com

Dimensions (measurements in mm)

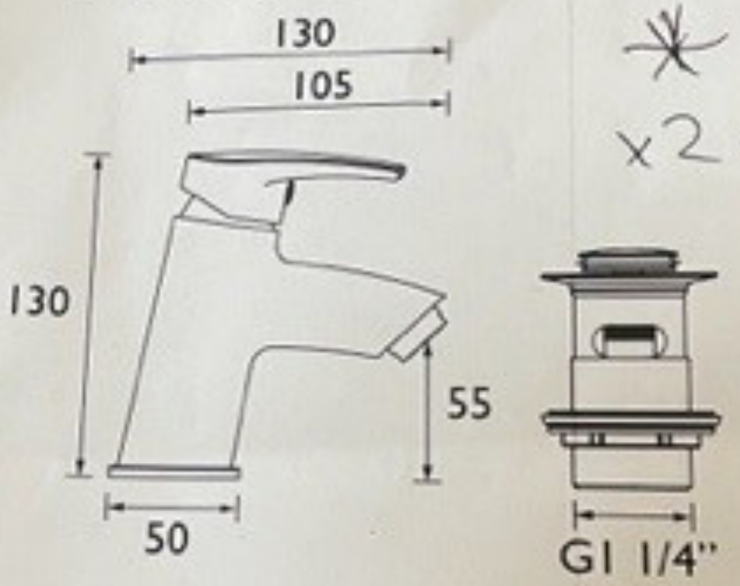

Flow Rates (l/min)

System Pressure (bar)	0.2	0.5	1	2	3	5
OR BAS C (mixed)	5	5	5	5	5	5

TECHNICAL DATA SHEET

5 YEARS TOP QUALITY GUARANTEED

10 YEARS TOP QUALITY GUARANTEED

BRISTAN

D12

Bristan, Birch Coppice Business Park, Dordon, Tamworth, B78 1SG. Web Site: www.bristan.com Telephone: 0330 026 6271. Email: enquire@bristan.com

* - 10 year guarantee applies to products purchased on or after 01/04/2021. Non-chrome product finishes carry a 5 year guarantee on finish. See www.bristan.com/guarantees for more information. The information contained on this page was correct at date of issue. Fitting Dimensions are provided as a guide only. Some variation may occur due to manufacturing tolerances. Bristan pursues a policy of continuous improvement in design and performance of its products and so reserves the right to change specifications without prior notice.

Specifications sheet of new taps