Renusol Europe GmbH

System Datasheet

CS+

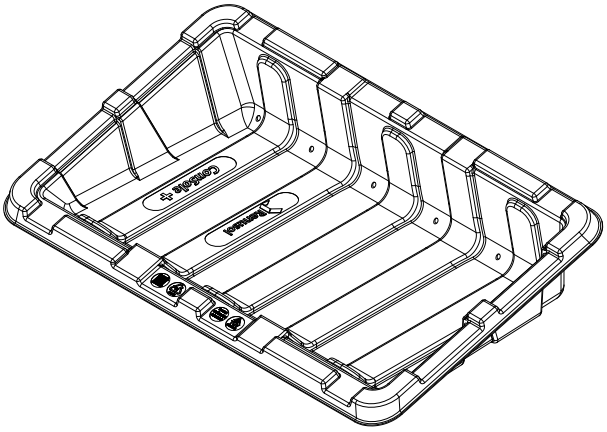

General

System	Freestanding ballasted PV mounting system
Scope of delivery	CS+ tub, mounting profiles and fixing material
System warranty	10 years
Application area	Flat roofs, landfills, open spaces, green areas (excluding hydrogen sulphide exposure)
Dimensions	Width: 1.730mm, depth: 1.100 mm, height: 390mm
Roof slope	max. 5° without additional measures
Ambient temperature range	-30°C to +50°C

System properties

System orientation	East-West, South
Material	HDPE, aluminium and stainless steel
Module tilt	15°
System weight approx.	≈ 7,9 kg
Friction coefficient	μ =0,5 is to be determined and ensured upon installation surface.
Minimum edge distance	1,5 m
Maximum snow load on the roof	2,5 kN/m²

Certifications

TÜV	ID1111212485 according to 2PfG
Wind loads	Determined in wind tunnel tests by Ruscheweyh Consult GmbH
Fire resistance	MPA Dresden
UV resistance	KIMW Kunststoff Institut Lüdenscheid

Services

PV layout	Provided by Renusol
Ballast plan	Provided by Renusol

Misprints and errors, technical or other changes and changes in the availability of products are expressively reserved

Renusol Europe GmbH

System Datasheet

CS+

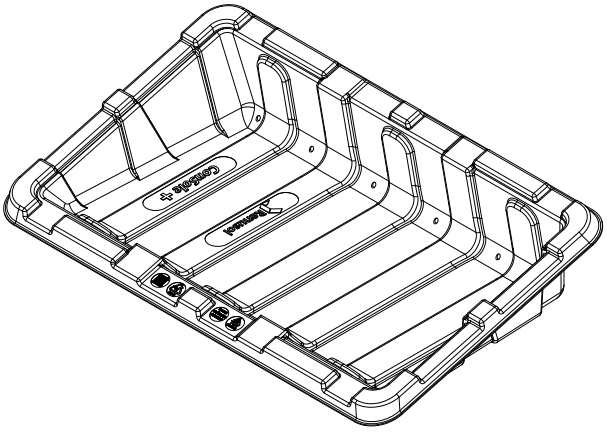

Modules

Type	Framed PV modules with mounting hole
Module length	1550 mm - 2400 mm
Module guidance	Horizontal/landscape format

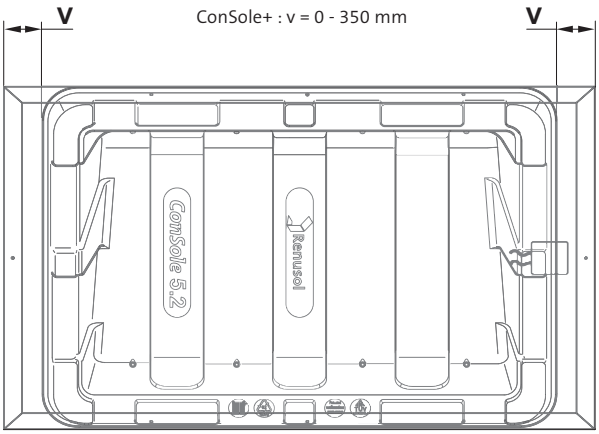

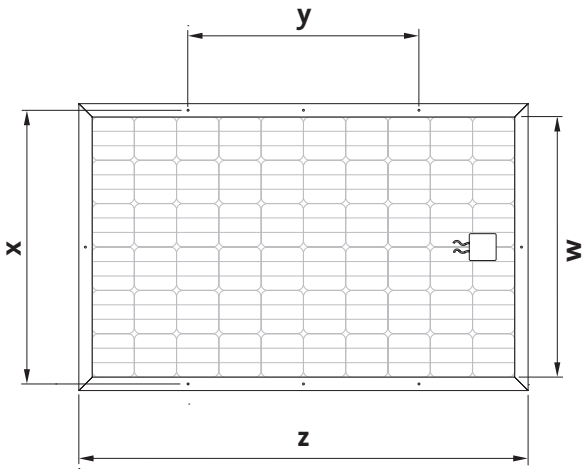

	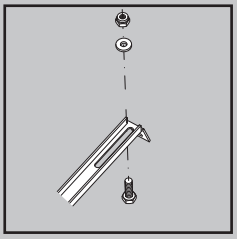	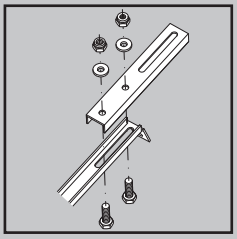	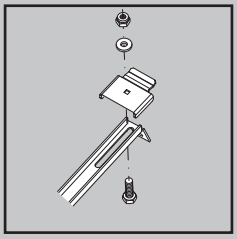	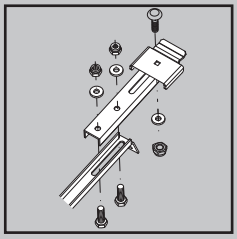
Article No.	*R520075-K*	*R520075-K + R460001*	*R520075-K + R420023*	*R520075-K + R460001 + R420023*
*Modul min. **w:***	-	-	*933 mm*	*996 mm*
*Modul max. **w:***	-	-	*995 mm*	*1075 mm*
*Modul min. **x:***	*895 mm*	*1016 mm*	-	-
*Modul max. **x:***	*1015 mm*	*1085 mm*	-	-
*Modul min. **y:***	*690 mm*	*690 mm*	-	-
*Modul max. **y:***	*1180 mm*	*1180 mm*	-	-
*Modul min. **z:***	*1550 mm*	*1550 mm*	*1550 mm*	*1550 mm*
*Modul max. **z:***	*2400 mm*	*2400 mm*	*2400 mm*	*2400 mm*

Misprints and errors, technical or other changes and changes in the availability of products are expressively reserved