(1) **CHRIST'S HOSPITAL**

(2) **HORSHAM DISTRICT COUNCIL**

AGREEMENT

Pursuant to section 106 of the Town and Country Planning Act 1990 in respect of

Erection of a glasshouse at Westons Farm, Westons Farm, Westons Hill, Itchingfield, Horsham, West Sussex RH13 0BD
Offsetting land: Sluett's Farm (part of Weston's Farm and Christ's Hospital)

Lauren Kelly – Head of Legal and Democratic Services
Horsham District Council
Albery House
Springfield Road
Horsham
West Sussex
RH12 2GB

Legal ref: CB/12240
Planning ref: DC/25/0173

THIS AGREEMENT is made as a deed and dated 14th July 2025

Between:

(1) **CHRIST'S HOSPITAL** (Co. Regn No. 06232556) whose registered office is at Christ's Hospital, The Avenue, Horsham, West Sussex RH13 0LJ (**"the Owner"**);

(2) **HORSHAM DISTRICT COUNCIL** of Albery House, Springfield Road, Horsham, West Sussex, RH12 2GB (**"the Council"**)

together "the Parties"

1. BACKGROUND & RECITALS

Whereas

1.1 The Council is the local planning authority as defined in the Act for the area within which the Application Site is situated for the purposes of this Agreement and for the purposes of section 106 of the Act and is entitled to enforce the planning obligations it contains.

1.2 The Owner is the registered proprietor with Title Absolute of land registered at HM Land Registry under title number WSX256211 being Christ's Hospital, Christ's Hospital Road, Horsham, West Sussex on which the Application Site and the Offsetting Site are situated.

1.3 There is a caution against first registration of a freehold estate which has been allocated title number WSX410271, the cautioner is Southern Electric Power Distribution PLC. The Parties accept that this interest in the Application Site does not need to be bound by the Agreement.

1.4 Part of the Application Site and Offsetting Site is unregistered land. The Parties accept that this interest in the Application Site and Offsetting Site does not need to be bound by the Agreement.

1.5 The Owner submitted the Application on 4 February 2025 which the Council validated on 5 March 2025.

1.6 The Parties have agreed to enter into this Agreement to secure the necessary planning obligations contained in this Agreement.

1.7 The Council's administrative area is situated in an area of serious water stress as identified by the Environment Agency's Water Stressed Areas Classification.

1.8 The water statutory undertaker, Southern Water, supplies drinking water to the Council's administrative area from the SNWSZ.

1.9 In September 2021 Natural England released the Position Statement which requires that any new development within the SNWSZ must be Water Neutral. The Parties agree that the Development must be Water Neutral and the Owner has entered into this Agreement in order to secure the required mitigation and Offsetting Measures in order to bind the Application Site and the Offsetting Site.

1.10 The Owner is willing to enter into, be bound by the obligations and be subject to the restrictions in this Agreement on the terms set out herein.

1.11 The Parties are satisfied that the provisions of this Agreement comply with the requirements of regulation 122 of the Community Infrastructure Levy Regulations 2010 (as amended) and, accordingly, that the planning obligations contained in this Agreement are necessary to make the Development acceptable in planning terms, are directly related to the Development and fairly and reasonably relate in scale and kind to the Development.

NOW THIS AGREEMENT WITNESSES as follows:

2. INTERPRETATION

In this Agreement:

2.1 Words importing the one gender include reference to all the genders.

2.2 Words importing the singular include the plural and vice versa.

2.3 Words importing persons include companies and corporations and vice versa.

2.4 Any words following the terms including**,** include**,** in particular**,** for example or any similar expression shall be construed as illustrative and shall not limit the sense of the words, description, definition, phrase or term preceding those.

2.5 Wherever there is more than one person named as a party and where more than one party undertakes an obligation, all their obligations can be enforced against all of them jointly and against each individually.

2.6 Any reference to a clause, schedule, paragraph or plan is to a clause, schedule, paragraph or plan in, to or attached to this Agreement, unless expressly stated otherwise.

2.7 Any reference to a colour or letter is to a colour or letter on the plans attached to this Agreement.

2.8 In the absence of contrary provision, any reference to a statute includes any statutory modification or re-enactment of it and every statutory instrument, direction, specification made or issued under the statute or deriving validity from it.

2.9 A reference to writing or written excludes fax and email.

2.10 An obligation on a party not to do something includes an obligation not to allow that thing to be done.

2.11 References to any party to this Agreement shall include the successors in title to that party and to any person deriving title through or under that party and, in the case of the Council, the successors to their functions as local planning authority.

2.12 The headings are for reference only and shall not affect construction.

3. DEFINITIONS

It is hereby agreed between the Parties set out in this Agreement that the following expressions have the following meanings:

"Act"	the Town and Country Planning Act 1990 (as amended).
"Application"	the application ascribed reference number DC/25/0173 and described as "Erection of a glasshouse".
"Application Site"	all that land at Westons Farm (part of Christ's Hospital) shown for identification purposes edged red on the Application Site Plan and to which the Application relates.
"Application Site Plan"	the plan of the Application Site entitled "Location Plan" with drawing number 26560-MAC-00-DR-B-001 Rev P3 dated 04 February 2025 at Schedule 1 of this Agreement.
"Commencement of Development"	the carrying out of a material operation as defined in section 56(4) of the Act in respect of the Development but excluding (for the purposes of this Agreement and for no other purpose) any operation relating to works of investigations in respect of land contamination or remedial action in respect thereof, enabling works demolition, site clearance works, earthworks, archaeological investigations and digs, exploratory boreholes, operations permitted by the Town and Country Planning (General Permitted Development) Order 2015, the erection of hoardings and fencing, temporary diversion of services and signage (including the formation of temporary construction accesses) and "**Commence Development**" shall be construed accordingly;

“Commencement Date”	the date on which the Commencement of the Development occurs;
“Commencement Notice”	the written notice confirming the Commencement Date referred to in clause 7.1.1 and served in accordance with Clause 7.3;
“Development”	the development of the Application Site pursuant to the Planning Permission;
“Monitoring Fee”	the fee of **£400 (four hundred pounds)** for monitoring obligations in the Agreement payable to the Council on or before completion of this Agreement.
“Occupation”	occupation for any purpose for which the Planning Permission has been granted by the Council other than occupation for the purposes of construction or fitting out or occupation for security, marketing or display and “**Occupy**” and “**Occupied**” shall be construed accordingly.
“Occupation Date”	the date on which the Development is first Occupied.
“Occupation Notice”	the written notice confirming the Occupation Date referred to in clause 7.1.2 to be served in accordance with clause 7.3 of this Agreement.
“Offsetting Measures”	the detailed water saving measures that are to be implemented on the Offsetting Site to make the Development Water Neutral set out in the Water Neutrality Statement.
“Offsetting Site”	all that land at Sluetts Farm, Two Mile Ash Road, Horsham, West Sussex, RH13 0LA which the Offsetting Measures are to be implemented, maintained and managed for the lifetime of the Development and which is identified edged red on the Offsetting Site Land Plan.
“Offsetting Site Plan”	the plan of the Offsetting Site entitled “Site Location Plan” with drawing no. 4 001 Rev. A dated Feb 22 at Schedule 1 of this Agreement.
“Planning Permission”	the planning permission to be granted by the Council pursuant to the Application.
“Position Statement”	the statement dated 14 September 2021 received by the Council from Natural England which shows that water abstraction for drinking water supplies in the SNWSZ is having a negative impact on the wildlife sites in the Arun Valley.
“Section 73 Consent”	any planning permission granted pursuant to section 73 of the Act to vary and/ or remove any planning condition(s) subject to which the Planning Permission was granted and/ or subsequent planning permission was granted pursuant to section 73 of the Act.
“SNWSZ”	the Sussex North Water Supply Zone from where Southern Water supplies drinking water.
“Southern Water”	the statutory undertaker responsible for the supply of water to the Development or any successor organisation which replaces it.
"Water Neutral"	the use of water in the SNWSZ after the Development has taken place is the same or lower than it was before the Development so as to accord with the Position Statement and "**Water Neutrality**" shall be construed accordingly.
"Water Neutrality Statement”	the statement prepared by Miles Ryan-Cummings of Savills for Mr David Exwood, WNS Report ref: 688769_WestonsGlasshouse dated January 2025 (latest revision 31/01.2025) and agreed with the Council to demonstrate and ensure that the Development is considered and delivered as Water Neutral and in accordance with the Position

	Statement by setting out key mitigation measures to achieve Water Neutrality and which appears at Schedule 3 of this Agreement.
"Water Stressed Areas Classification"	means the Environment Agency's report dated 1 July 2021 setting out the results of the Environment Agency's determination of areas of water stress in England and any subsequent report.
"Working Day"	means Monday to Friday inclusive but excluding any day that is a bank holiday, public holiday or statutory holiday in England.

4. ENABLING PROVISIONS

4.1 This Agreement is made pursuant to section 106 of the Act, section 111 of the Local Government Act 1972, section 1 of the Localism Act 2011 and all other enabling powers.

5. CONDITIONS PRECEDENT

5.1 This Agreement shall come into effect upon the date it is dated but the provisions in Schedules 2 and 3 shall only take effect upon the Commencement of Development unless explicitly stated otherwise.

6. COVENANTS

6.1 Subject to clause 5.1:

6.1.1 The Owner covenants with the Council to fully comply with and to perform the obligations contained herein and in Schedules 2 and 3 of this Agreement in accordance with the requirements and timescales set out;

6.1.2 The Owner covenants with the Council that the Development and use of the Application Site shall be in strict accordance with this Agreement;

7. NOTICES

7.1 The Owner covenants with the Council as follows:

7.1.1 to give the Commencement Notice to the Council not less than 10 (ten) Working Days before the anticipated Commencement Date; and

7.1.2 to give the Occupation Notice to the Council not less than 10 (ten) Working Days before the anticipated Occupation Date.

7.2 The Parties to this Agreement agree that if the Owner fails to give the notice required by clause 7.1.1 and clause 7.1.2 above then the Council shall be entitled in its absolute discretion to determine the Commencement Date and Occupation Date and shall give notice to the Owner of the Council's determination.

7.3 Any notice, certificate or other communication required or permitted to be given under this Agreement shall be given in writing to the relevant party at the relevant address referred to at the start of this Agreement or such other address as may be notified in writing to the other party and must be served personally or by first class registered or first class recorded delivery post and, in the case of the Council, the relevant party shall address any notice to the Head of Legal and Democratic Services of the Council.

7.4 Any notice, certificate or other communication sent by post shall be deemed (in the absence of evidence of receipt) to have been delivered 2 (two) Working Days after despatch and in proving the fact of despatch it shall be sufficient to show that the envelope was properly addressed and posted.

7.5 Any notice, certificate or other communication delivered personally shall be deemed to have been delivered at the time it is received provided it is received between 09:00hrs and 17:00hrs on a Working Day but otherwise it shall be deemed to have been received on the next Working Day.

8. COSTS

8.1 The Owner has undertaken to pay on or before the date hereof the Council's reasonable legal costs incurred in preparing and entering into this Agreement and the Monitoring Fee.

9. CHARGEE'S / MORTGAGEE'S CONSENT/ LIABILITY

9.1 Any future mortgagee or chargee shall not be liable for any breach of the obligations in this Agreement unless committed or continuing at a time when it is in possession of all or any part of the Application Site and/or the Offsetting Site in which case it will be bound by the obligations in this Agreement as if it were a person deriving title from the Owner.

10. GENERAL

The Parties undertake that:

10.1 this Agreement constitutes a planning obligation for the purposes of section 106 of the Act, section 111 of the Local Government Act 1972, section 1 of the Localism Act 2011 and any other enabling powers.

10.2 this Agreement constitutes a deed.

10.3 this Agreement is enforceable by the Council in accordance with section 106 of the Act.

10.4 nothing in this Agreement confers or is intended to confer a benefit on a third party under the Contracts (Rights of Third Parties) Act 1999.

10.5 It is hereby agreed by the Owner that failure by the Council at any time to enforce the provisions of this Agreement or to require performance strictly or otherwise by the Owner of any of the conditions, covenants, agreements or obligations of this Agreement or any failure or delay by the Council to exercise any act, right or remedy shall not be construed as a creating an estoppel in connection with any such condition, covenant, agreement or obligation and shall not affect the validity of this Agreement or any part thereof or the right of the Council to enforce any provision and any variation of this Agreement shall not vitiate the remainder of the Agreement which shall remain in full force and effect subject to such amendment or amendments.

10.6 The Owner hereby undertakes that:

10.6.1 this Agreement supersedes and replaces all previous negotiations whether oral or written;

10.6.2 the Owner has not relied on any express or implied statement warranty representation or undertaking given by or on behalf of the Council; and

10.6.3 nothing herein contained excludes the liability of any party in relation to fraud.

10.7 The Owner acknowledges that this Agreement will be registered as a local land charge.

10.8 The Owner hereby gives consent for the Application Site Plan and Offsetting Site Plan to be reproduced by the Council.

10.9 If any provision in this Agreement shall be held to be invalid, illegal or unenforceable the validity, legality and enforceability of the remaining provisions hereof shall not in any way be deemed thereby to be affected or impaired.

10.10 This Agreement shall be governed by and interpreted in accordance with laws of England and the Parties submit to the exclusive jurisdiction of the courts of England.

10.11 The obligations in this Agreement (with the exception of clause 8.(Costs)) shall cease to have effect (insofar only as it has not already been complied with) if, before the Commencement of Development, the Planning Permission:

10.11.1 expires; or

10.11.2 is varied or revoked other than at the request of the Owner; or

10.11.3 is quashed following a successful legal challenge,

but will remain in full force and effect so far as any subsisting Section 73 Consent is concerned.

10.12 The Owner (or any person deriving title to Application Site or the Offsetting Site from the Owner) shall not be liable for any breach of the restrictions and obligations set out in this Agreement where such breach arises after the Owner has parted with its interest in the Application Site or the Offsetting Site or any part of Application Site or Offsetting Site to which such breach relates save in respect of liability for antecedent breach of this Agreement.

10.13 Section 33 of the Local Government (Miscellaneous Provisions) Act 1982 applies to the covenants in this agreement.

10.14 References to the Application Site and Offsetting Site include any part of it.

10.15 Any covenant by the Owner not to do any act or thing includes a covenant not to permit or allow the doing of that act or thing.

10.16 Nothing in this Agreement shall prohibit or limit the right to develop any part of the Site in accordance with any planning permission (other than the Planning Permission or any modification variation or amendment thereof) granted after the date of the Planning Permission.

10.17 Subject to the proviso to this clause if any Section 73 Consent is granted after the date of this Agreement:

10.17.1 the obligations in this Agreement shall relate to and bind such Section 73 Consent; and

10.17.2 the definitions of Application, Development and Planning Permission (other than for the purposes of clause 1) shall be construed to include reference to (respectively) the planning application for the Section 73 Consent, the development permitted by the Section 73 Consent and the Section 73 Consent itself.

10.17.3 nothing in this clause shall fetter the discretion of the Council in determining any planning application for a Section 73 Consent and the appropriate planning obligations required in connection with the determination of the same.

PROVIDED THAT:

10.17.4 to the extent that any of the obligations in this Agreement have already been discharged at the date that a Section 73 Consent is granted they shall remain discharged for the purposes of the Section 73 Consent; and

10.17.5 the Council reserves the right to insist upon the completion of a separate planning obligation by deed of agreement in connection with any Section 73 Consent if the Council (acting reasonably) considers it desirable to do so.

10.18 Except for the planning obligations contained in this deed specifically regulating the use of land or buildings after construction pursuant to the provisions of this deed or the Planning Permission or the planning obligations that relate to the Offsetting Site, no obligations contained in this deed shall be binding on any freehold or leasehold owners or occupiers of individual dwellings constructed pursuant to the Planning Permission (or their respective mortgagees) or land held by any of the statutory utilities for their operational purposes.

11. DISPUTE RESOLUTION

11.1 Should a dispute or difference arise between the Owner and the Council concerning anything herein then the provisions of this clause 11 shall apply.

11.2 All differences and disputes which may arise between the Parties concerning this Agreement shall be referred to the determination (as an expert and not as an arbitrator) of an independent leading conveyancing/planning counsel agreed upon by

the Parties but in default of such agreement appointed by the President of the Law Society of England and Wales on the application of any of the Parties.

11.3 Any expert appointed pursuant to clause 11.2 shall:

11.3.1 on his appointment serve written notice thereof on the parties in dispute;

11.3.2 consider any written representations by or on behalf of those parties which are received by him within 20 (twenty) Working Days of such service and immediately forward a copy of the written representation of one party to the other party;

11.3.3 allow the parties to the dispute an opportunity of commenting in writing on the other party's representations within 20 (twenty) Working Days of receipt by the other party thereof;

11.3.4 have an unfettered discretion to determine the reference to him;

11.3.5 serve notice of his determination as soon as he has made it;

11.3.6 give full and clear reasons for his decision; and

11.3.7 be paid his proper fee and expenses in connection with such reference by the Parties in dispute in equal shares or in such shares as he may determine and his determination shall be final and binding on the parties in dispute (save in the case of manifest error) PROVIDED THAT if any such expert shall die, become insolvent or of unsound mind or if any of the parties in dispute shall serve on him written notice in their opinion he has unreasonably delayed making his determination he shall be ipso facto discharged and be entitled only to his reasonable expenses prior to such discharge and another person shall be appointed in his place as such expert.

11.4 The provisions of this clause shall not affect the ability of the Council to apply for and be granted any of the following: declaratory relief, injunction, specific performance, payment of any sum, damages, and any other means of enforcing this Agreement and consequential and interim orders and relief.

12. OWNERSHIP

12.1 The Owner warrant that no person other than the Owner has any legal or equitable interest in the Application Site other than as set out in this Agreement.

12.2 The Owner undertakes to the Council to give the Council immediate written notice of any change in the ownership of any of their respective interests in the Application Site and/ or the Offsetting Site occurring before all the obligations under this Agreement have been discharged such notice to give details of the transferee's full name and registered office (if a company or usual address if not) together with the area of the Application Site and/or the Offsetting Site purchased by reference to a plan.

IN WITNESS whereof this Agreement has been duly executed the day and year first hereinbefore mentioned

EXECU
CHRIST
acting by [redacted] director and the company secretary

..... Signed (Director)

..... Signed (Director/ Company Secretary)

SEALED WITH THE COMMON SEAL of
HORSHAM DISTRICT COUNCIL
in the presence of:

[redacted]

Authorised Officer

18066 x2



Schedule 1

Plans

[redacted]

[redacted]

[redacted]

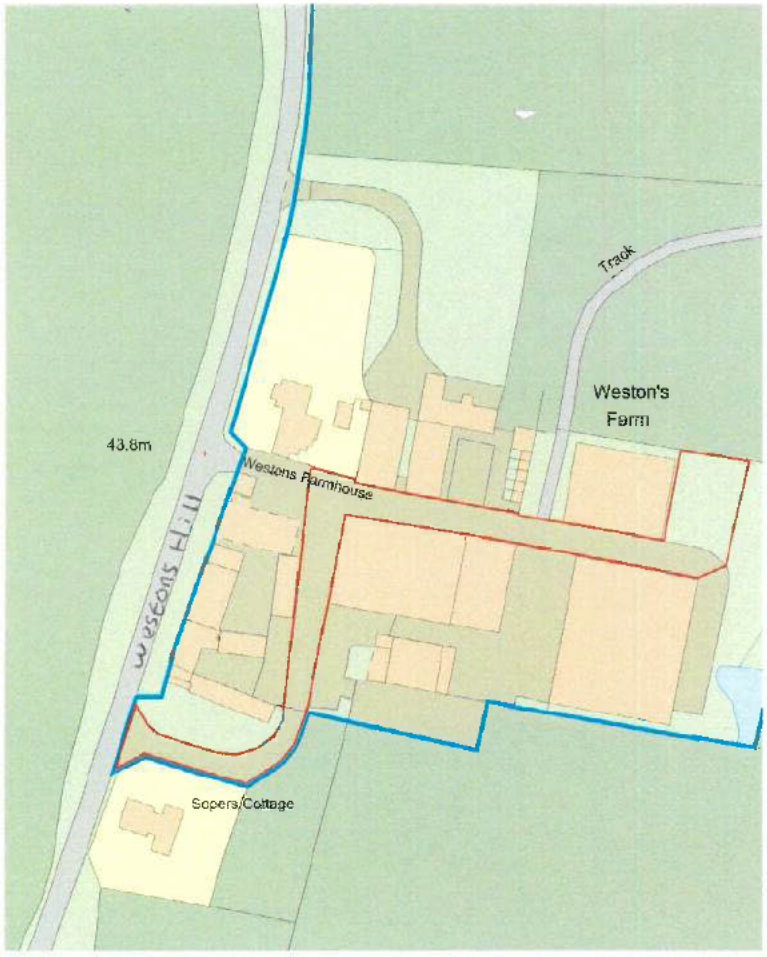

© Crown copyright and database rights 2024. OS AC0000813445

Scale in Metres

0 10 20 30 40 50 100 125

Notes:

DO NOT SCALE FROM THIS DRAWING. Use Figured dimensions only.

This drawing is the copyright of MacConvilles Surveying and may be reproduced without written consent or used for any purpose without the prior written consent of MacConvilles Surveying.

This drawing must be read in conjunction with all other related drawings and documentation. Any discrepancy in either must be reported immediately to track double surveying.

It is the contractor's responsibility to check all measurements on site. Any errors or omissions to be reported immediately to MacConvilles Surveying.

Dimensions are in millimeters only, size and fixed yielding only is as marked on site. Any errors or confirmation by relevant specialist subcontractor.

Full Original Report Report of Structural Design and Report of MacConvilles Surveying.

MacConvilles Surveying Design is not responsible for the accuracy of the drawing and any errors or omissions with prior written consent.

N

Drawing Status

FOR PLANNING

Rev	Description	By	Date
P3	Boundary line ammended	DC	04.02.2025
P2	Red line Extended	DC	17.10.2024
P1	First Issue	DC	26.07.2024

MacConvilles

Haversham House
20-22 Boundary Road
Hove
East Sussex
BN3 4EF
T +44 (0) 1273 652611
E mail@macconvilles.com
W www.macconvilles.com

RICS

Client
CHRISTS HOSPITAL

Project Title
WESTONS FARM, ITCHINGFIELD - GLASSHOUSE

Drawing Title
LOCATION PLAN

Scale @ A3	Drawn	Checked	Revision Date
1:1250	DC	KB	04.02.2025

Drawing Number

Project	Originator	Zone	Project Ref
26550	- MAC	- N/A	26550
00	- DR	- B	- 001
Level	Type	Role	Number

Revision
P3

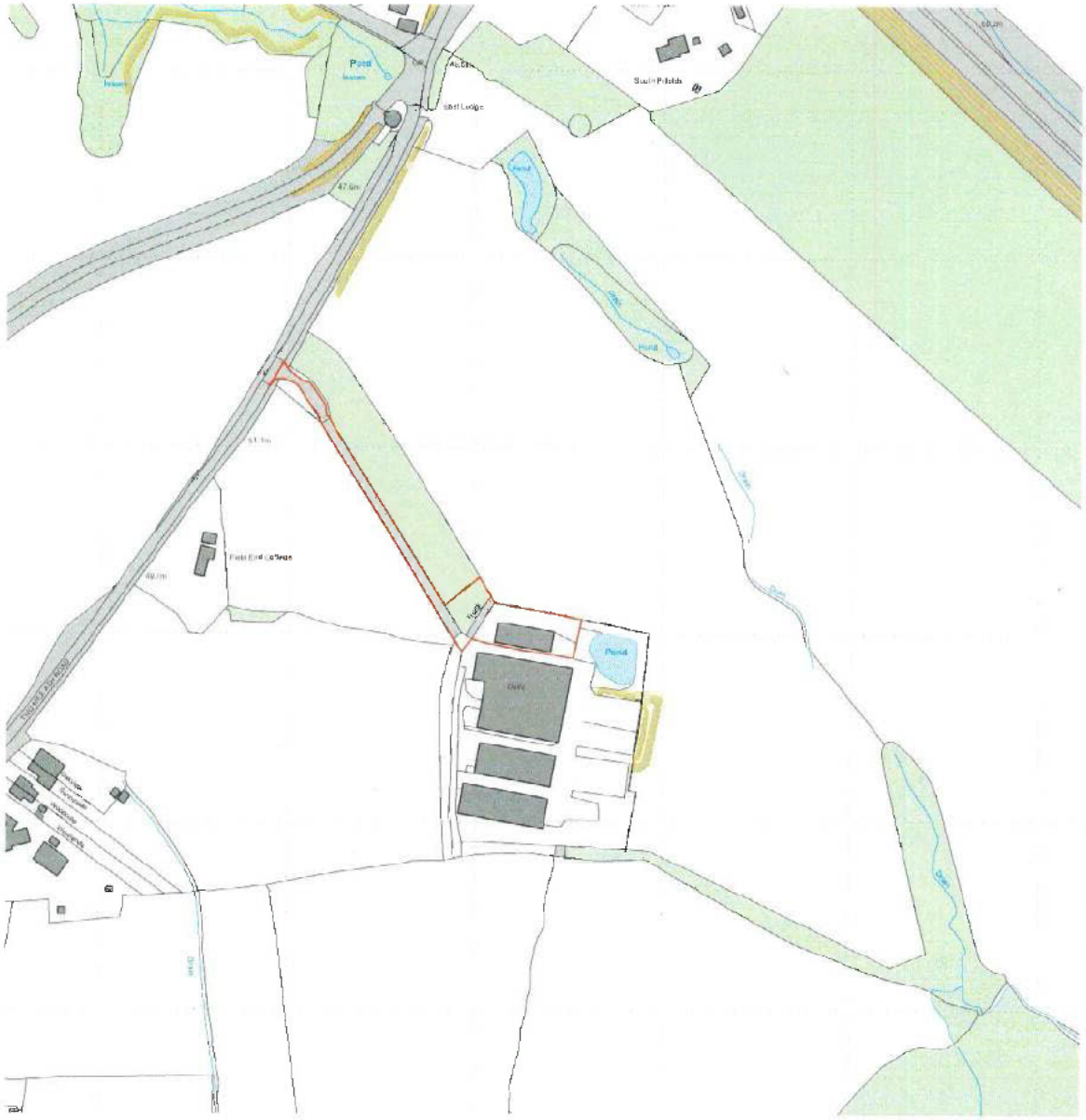
Pond
Shed
Pond
Pond
Pond

Schedule 2

The Owner's covenants to the Council

The Owner covenant with the Council so as to bind their interest in the Offsetting Site and for the purposes of ensuring that the Development can be delivered as Water Neutral as follows:

1. To implement the Offsetting Measures at the Offsetting Site in accordance with the Water Neutrality Statement contained at Schedule 3.
2. To retain the Offsetting Measures in perpetuity and not to remove or replace the Offsetting Measures other than with a replacement fixture or fitting which meets an equivalent or more efficient water standard.
3. To maintain and keep in good repair the Offsetting Measures installed on the Offsetting Site in accordance with the Water Neutrality Statement.
4. To allow the Council to enter the Offsetting Site for the purpose of inspecting the Offsetting Measures and ensuring that the measures are retained as required provided that the Council gives not less than 1 (one) Working Day's notice in writing of its intention to inspect the Offsetting Measures.

Schedule 3

Water Neutrality Statement

Water Neutrality statement prepared by Miles Ryan-Cummings of Savills for Mr David Exwood, WNS Report ref: 688769_WestonsGlasshouse dated January 2025 (latest revision 31/01.2025)

Westons Farm - Glasshouse

Water Neutrality Statement

January 2025

Prepared on behalf of Mr. David Exwood

Quality management			
Prepared by:	Miles Ryan-Cummings	Consultant	
Authorised by:	Dan Smyth	Director	
Report ref:	688769_WestonsGlasshouseWNS	Date of issue:	31/01/2025

Revision history			
Rev	**Date**	**Link**	**Status**
0	09/01/2025	688769_WestonsGlasshouseWNS_Rev0	Draft for internal review
1	17/01/2025	688769_WestonsGlasshouseWNS_Rev1	Draft for client review
2	31/01/2025	688769_WestonsGlasshouseWNS_Rev2	Final document

Table of Contents

1 Introduction **1**
2 Background **2**
2.1 Site description 2
2.2 Water neutrality in Horsham District 2
2.3 Water neutrality work undertake in Horsham District 4
3 Baseline Calculations **6**
4 Proposal Demand **7**
4.2 Approach 7
4.3 Anticipated water consumption 8
4.4 Water neutral? 8
5 Efficiency and offsetting measures **9**
5.1 Efficiency and offsetting hierarchy 9
5.2 Source of water offset 9
5.3 Proposed development water neutrality 11
6 Conclusion **13**
References **15**

Appendix A – Keepers Cottage Water Neutrality Statement

List of Tables

Table 4-1: Estimated levels of water consumption, by crop category, and system **8**
Table 4-2: Determining water neutrality **8**
Table 5-1: Reduction in mains water demand across the SNWRZ **11**
Table 5-2: Reduction in mains water demand across the SNWRZ, including the Proposed Development **12**

1 Introduction

1.1.1 This Water Neutrality Statement (WNS) has been prepared to accompany a full planning application submitted to Horsham District Council (HDC) on behalf of Mr. David Exwood (the Applicant), who is a tenant farmer of the Christ's Hospital Foundation (CHF), for the following development proposal at Westons Farmhouse, Fulfords Rd, Itchingfield, Horsham, RH13 0NR:

"Erection of a glasshouse"

1.1.2 CHF is a registered charity, whose principal objective is to aid the advancement of education for children, principally for the benefit of those who have social, financial and other specific needs. The assets and endowments of the Foundation are used to support more than 600 bursary places at the school. The ability of the Foundation to meet the financial needs of the school depends critically on funding which derives from the endowment and returns from their investments.

1.1.3 The opportunities provided by the Foundation's land are directly linked to its charitable purposes. The Foundation views the Proposed Development as an opportunity to provide capital to support the objectives of the charity while improving local, sustainable, housing supply.

1.1.4 On 14 September 2021, HDC received a Position Statement from Natural England (NE). In this note, NE explained that it could not be concluded that water abstraction for drinking water supplies within the Sussex North Water Resource Zone (SNWRZ; also referred to as the 'Sussex North Water Supply Zone', SNWSZ) was not having a negative impact on a number of designated sites including Amberley Wild Brooks Site of Special Scientific Interest (SSSI) and Pulborough Brooks SSSI. These form part of the Arun Valley Special Protection Area (SPA), Arun Valley Special Area of Conservation (SAC) and Arun Valley Ramsar site. As a result, NE advised HDC that any new development that takes place within Horsham must not add to this negative impact, i.e. that all development should be water neutral.

1.1.5 All applications in the affected area are now expected to be supported by a WNS, which will help with the Appropriate Assessment under the Habitats Regulations, and this is a planning application validation requirement in Horsham. The application site falls within the SNWSZ as defined by NE. Hence, this statement responds to water neutrality obligations set out by HDC and NE in relation to the Proposed Development.

1.1.6 This WNS follows the guidance set out by HDC on its 'Water neutrality and planning applications' webpage, which is updated periodically and was accessed 9th January 2025 (Horsham District Council, 2023). This statement includes all of the elements that HDC expect a WNS to include based on the website's guidance.

2 Background

2.1 Site description

2.1.1 The Proposed Development (Westons Farmhouse Glasshouse) is to be situated on a parcel of greenfield land within Westons Farm that is adjacent to an existing glasshouse and other agricultural buildings associated with the operation of the farm. Westons Farm Shop is located to the southwest of the site, which provides employment for local residents, serves local communities around Christ's Hospital and Itchingfield, and will sell produce produced in the proposed glasshouse, similar to the existing glasshouse.

2.1.2 The application site lies approximately 900m to the east of the CHF School Campus and is under the jurisdiction of HDC. It also lies within the Itchingfield Neighbourhood Development Plan area.

2.1.3 The proposed glasshouse will be rectangular in shape, measuring 18.29 m in length, 12.19 m in width and 4.07 m in height to the apex. It therefore has an internal area of 222.96 m^2. The walls consist of glass panels that are supported by an aluminium frame. The east elevation will include double sliding doors to access the internal space.

2.1.4 The glasshouse will contain no water consuming fittings or appliances, and will be irrigated via a hosepipe. The Applicant has confirmed that it is likely that the proposed glasshouse will be used to grow lettuce and cucumbers using a soil-based/growbag system, using automatic drip irrigation and shading to prevent excessive vapour pressure deficit (VPD).

2.2 Water neutrality in Horsham District

2.2.1 The issue of water neutrality in Horsham District arose in September 2021 as a result of a position statement from Natural England, referred to above, which stated that water demand within the SNWSZ might have a potential impact on internationally protected sites and species within Arun Valley SPA, Arun Valley SAC and Arun Valley Ramsar site, most notably an impact to the Little Ramshorn Whirlpool Snail. The position statement stated that the *"Sussex North Water Supply Zone includes supplies from a groundwater abstraction which cannot, with certainty, conclude no adverse effect on the integrity of the aforementioned designated sites."*

2.2.2 These sites receive statutory protection under the Conservation of Habitats and Species Regulations 2017 (the Regulations) (HM Government, 2017). These Regulations transpose into UK legislation the 'Habitats Directive' 1992 (92/43/EEC) (HM Government, 1992) and the 'Birds Directive' 2009 (2009/147/EC) (HM Government, 2009). National planning policy sets out that listed Ramsar sites should be considered in the same way as if they had been classified or designated as SACs or SPAs, as stated in paragraph 181 of the National Planning Policy Framework (Department for Levelling Up, Housing and Communities, 2023).

2.2.3 The Regulations impose a duty on local planning authorities (competent authorities) to carefully consider whether any proposals may have a significant effect on a European designation, either alone or in combination with other plans or projects. In most circumstances, permission may only be granted for a plan or project to proceed if it has been ascertained that it will not have an adverse effect on the integrity of any such designation.

2.2.4 The SNWSZ includes the whole of the administrative areas of HDC and Crawley Borough Council, as well as the north of Chichester District Council and areas within the South Downs National Park Authority. The impact of the position statement has effectively resulted in a moratorium on the positive determination of planning applications which require mains water use in the affected areas unless water neutrality can be demonstrated.

2.2.5 Definitions of water neutrality often vary depending on the context in which the definition is used. HDC defines water neutrality as:

"Development that takes place which does not increase the rate of water abstraction for drinking water supplies above existing levels." (Horsham District Council, 2023)

Local planning policy

Horsham District Planning Framework 2015

2.2.6 The Horsham District Planning Farmwork 2015 (Horsham District Council, 2015) is the current, adopted local plan covering the jurisdiction of HDC. There is no specific policy regarding water neutrality requirements in the current Local Plan, which is the applicable planning policy for determination of this application.

2.2.7 However, the Local Plan does encourage water efficiency in Policy 37 Sustainable Construction, which states: "*Proposals must seek to improve the sustainability of development. To deliver sustainable design, development should incorporate the following measures where appropriate according to the type of development and location:* [inter alia] *Limit water use to 110 litres/person/day;".*

Draft Horsham District Local Plan 2023-2040 (Regulation 19)

2.2.8 The Regulation 19 Horsham District Local Plan 2023-2040 (Draft Local Plan) is currently available in draft version, and underwent public consultation between 19/01/2024 – 01/03/2024. The Draft Local Plan serves, in part, as a response to the aforementioned position statement issued by NE, acknowledging that the key challenge for the district is continuing to protect the environment while also achieving growth.

2.2.9 The draft local plan was formally submitted to the Planning Inspectorate on 26/07/2024 for examination and hearings took place between 10/12/2024 - 12/12/2024, at which a range of evidence was presented on water neutrality, and the plan's legal compliance with Habitats Regulations. In response to the evidence presented at the examination hearings, the appointed examination inspector: Luke Flemming, stated that they *"have serious concerns about the soundness and legal compliance of the* [draft local] *Plan in respect of a number of areas"*. It is understood that this relates in particular to water neutrality. In the same letter, Mr Flemming cancelled the remaining scheduled hearings. It is now uncertain how the draft local plan will progress and so it is not considered further in this water neutrality statement.

2.3 Water neutrality work undertake in Horsham District

The Sussex North Water Neutrality Study

2.3.1 In response to the issue of water neutrality in North Sussex, a study was commissioned by HDC and carried out in three stages, A–C (Horsham District Council, 2023).

Part A

2.3.2 The first stage of the work on water neutrality was studies that examined the impacts on water neutrality for each local authority area on an individual basis.

Part B

2.3.3 The second stage considered the total (or cumulative) impact of proposed development in all the local authority areas that use Sussex North Water Supply Zone (Horsham District Council, Crawley Borough Council, Chichester District Council, West Sussex County Council and the South Downs National Park). The purpose of this work was to understand how water demand may increase in the future and work out how much water will need to be 'offset' through water neutrality.

Part C

2.3.4 The '*Part C'* – Mitigation Strategy was published in December 2022. This study built upon and updated previous work, and set out a water neutrality strategy for all affected authorities. This included recommending a policy approach with regard to water efficiency standards in new development and setting out principles for an offsetting scheme, which together would allow water neutrality to be achieved by growth identified in local plans.

2.3.5 The Part C Mitigation Strategy proposed the creation of an LPA-led scheme to provide water offsetting, which has since been termed the Sussex North Offsetting Water Scheme (SNOWS). SNOWS is undergoing consultation and has not yet reached the stage of implementation where offsets are available to developers. In the interim therefore it is necessary for developments where water neutrality applies to seek privately developed offsets in order to contribute to meeting the HDC mitigation strategy aims.

Pulborough Brooks

2.3.6 Pulborough Brooks Nature Reserve is managed by the Royal Society for the Protection of Birds (RSPB) to provide the *"perfect condition for wildlife"* (RSPB, 2023). It contains a network of ditches which are the habitat of the threatened little ramshorn whirlpool snail.

2.3.7 A combination of controlled flooding, grazing and hay cutting are used to manage the wet grasslands to create a healthy mosaic of grassland habitats.

2.3.8 The ditches which cross the wet grasslands need clearing out to move water around the site. This is done on rotation, to always keep some of the vegetation which lives there and to give a home to rare wildlife, including the little ramshorn whirlpool snail.

2.3.9 In 2017 the ditches were the focus of a Heritage Lottery funded project “Back from the Brink” which helped create ideal conditions for the rare little ramshorn whirlpool snail and other aquatic species.

Groundwater licensing

2.3.10 Groundwater abstraction is licensed by the Environment Agency. In the case of water abstracted at Hardham, this is managed by Southern Water who apply for the right to abstract water in accordance with population forecasts associated with the relevant Local Plan, including windfall development. Such applications are accompanied by the relevant environmental information in order to allow the Environment Agency, as competent authority, to consider licensing in light of this.

2.3.11 Investigations and discussions between Southern Water, the Environment Agency and Natural England are ongoing. However, it is understood that groundwater abstraction from Hardham is being reduced in accordance with the Environment Agency’s ongoing management requirements.

3 Baseline Calculations

3.1.1 As per HDC's definition of water neutrality, it is necessary to calculate the difference between historical and anticipated water consumption at the site. If both values are equal, or if a surplus is generated, then the Proposed Development will comply with or potentially provide an additional positive contribution to the water neutrality ambitions in the SNWSZ. However, if anticipated consumption is higher than historical consumption, then the difference between the two must be offset within the region.

3.1.2 This section will outline the baseline water demand arising from the Proposed Development in line with guidance from HDC (Horsham District Council, 2023).

3.1.3 In relation to evidencing baseline water consumption for commercial planning applications, HDC state that:

"The best way to evidence existing mains water consumption is via copies of metered water bills from within the last three years. The bills should cover the period before Covid as well as after as the lockdowns will have affected consumption at many sites. Unmetered water bills will not be accepted. Where there are other uses on a site, or the use is shared across multiple other buildings and land, it will be difficult to evidence with certainty the actual water use from a building unless separately metered. This is particularly the case for agricultural buildings. In such scenarios we will likely only be able to consider existing water consumption as nil."

3.1.4 As the Proposed Development is to be situated on a parcel of greenfield land within Westons Farm, there has been no prior water consumption on this land, and hence, a **nil baseline** is applied for the purposes of this water neutrality statement.

4 Proposal Demand

4.1.1 This section will calculate the anticipated water demand arising from the Proposed Development.

4.2 Approach

4.2.1 As per HDC's "Water neutrality and planning applications" guidance (Horsham District Council, 2023), the calculation of anticipated water demand from proposals should typically follow the Building Regulations Part G or BREEAM WAT01 water calculation methods. However, both methods calculate anticipated water consumption based on the flow rates and water consumption values of common sanitary ware and appliances found in dwellings and non-domestic building (such as WCs, sinks, showers, etc.). The proposed glasshouse will not contain any such sanitary ware or appliances and so neither the Part G or WAT01 calculators are considered applicable nor appropriate in the determination of water neutrality in this instance.

4.2.2 As a result, alternative approaches to calculate anticipated water demand arising from the new glasshouse were explored. The first alternative approach explored was to use historical water consumption from the existing glasshouse as a proxy for anticipated demand arising from the new glasshouse, scaling this figure by size (m^2). However, the Applicant, on the 31st July 2024, confirmed that there is no direct metered supply with data to the existing glasshouse. Therefore, water demand associated with the existing glasshouse could not be used to determine anticipated water consumption arising from the proposed glasshouse.

4.2.3 The next approach explored was to undertake a literature review to gain insights into the water consumption patterns of glasshouse crop cultivation in the UK, for which there is not an abundance of literature available. However, the Environment Agency (EA), in collaboration with SRK consulting and Cranfield University, published the Best Practice Manual: *'Optimum use of water for industry and agriculture: phase 3'* (the EA report) (Environment Agency, 2003).

4.2.4 The EA report outlines anticipated water use for crops commonly grown in glasshouses in the UK under three main types of growing systems used in the production of glasshouse crops: direct soil cultivation; rockwool; and nutrient film technique (NFT). Direct soil cultivation is the most common growing system used in the production of glasshouse crops. In this system, crops are irrigated as if they were a field crop. Rockwool is an artificial growing medium made from a mixture of basalt and limestone, widely used by tomato, pepper and cucumber growers. Lastly, NFT systems are a hydroponic system whereby roots are bathed in a circulating solution of nutrients and supported by wires as necessary, mainly used on tomatoes, peppers and some lettuce crops.

4.2.5 Table 4-1 provides a summary of the systems used and their typical levels of water usage by crop category. As presented in Table 4-1, rockwool is the most water consuming growing system used to grow crops in glasshouses in the UK, followed by NFT, which is followed by soil based systems (least consumptive system). At the time of writing, the exact glasshouse growing system to be used within the proposed glasshouse is unknown. However, the Applicant has confirmed that it is likely that the proposed glasshouse will be used to grow lettuce and cucumbers using a soil-based/growbag system, using automatic drip irrigation and shading to prevent excessive vapour pressure deficit (VPD).

4.2.6 As the exact growing system to be used is unknown, the water consumption rate of 1,500 litres/m^2/year, representative of crops grown in a rockwool system, has been chosen to estimate anticipated water demand within this Water Neutrality Statement. This is likely to result in the estimation of an overexaggerated water consumption figure in comparison to future consumption, however, this provides certainty in the determination of water neutrality.

Table 4-1: Estimated levels of water consumption, by crop category, and system

Crop	System	Water use (m^3 / ha / year)	Water use (litres / m^2 / year)
Tomatoes	Rockwool	15,000	1,500
Cucumbers			
Tomatoes	NFT	9,500	950
Lettuce			
Lettuce	Soil based	6,000	600

Reproduced and modified from Environment Agency Best Practice Manual (Environment Agency, 2003)

4.3 Anticipated water consumption

4.3.1 As described in Section 2.1, the proposed glasshouse will be rectangular in shape, measuring 18.29 m in length and 12.19 m in width. It will therefore have an internal area of 222.96 m^2. On this basis, the anticipated annual water consumption of the Proposed Development would be up to 916.27 litres/day ($1{,}500\ (litres/m^2/annum) \times 222.96\ (m^2) \div 365 = 916.274\ litres/day$).

4.4 Water neutral?

4.4.1 As mentioned in Section 2, HDC defines water neutrality as:

"Development that takes place which does not increase the rate of water abstraction for drinking water supplies above existing levels."

4.4.2 Water neutrality can therefore be assessed by establishing the difference between existing (baseline) levels and anticipated levels arising from the Proposed Development.

4.4.3 As discussed in Section 3, the baseline water demand for the glasshouse is 0 litres/day.

4.4.4 The difference between the baseline and proposed water consumption is shown in Table 4-2. The results show that there would be an increase in average water consumption relative to the baseline as a result of the Proposed Development. This increase would be of +916 litres/day. Therefore, the Proposed Development cannot be determined to be water neutral and offsetting measures are required.

Table 4-2: Determining water neutrality

Consumption Period	Consumption (litres/day)
Baseline	0
Anticipated	916.27
Difference	+916.27

5 Efficiency and offsetting measures

5.1 Efficiency and offsetting hierarchy

5.1.1 As advised by HDC, reducing water consumption in the Proposed Development through the installation of water efficient fittings and appliances should be considered before offsetting. As previously mentioned, the proposed glasshouse will not contain any such fittings or appliances and so achieving water efficiency via this method is not applicable to the proposed glasshouse.

5.1.2 As mentioned in the EA report (Environment Agency, 2003), glasshouses employ a variety of growing systems, each of which exhibit varying levels of water efficiency. At the time of writing, it is unknown which growing system is to be used within the proposed glasshouse. However, the Applicant has confirmed that will likely be cultivated using a soil-based/growbag system, the least water consumptive growing system outlined within the EA report. Nonetheless, rockwool, the most water intensive growing system, has been used for the purpose of estimating future water consumption. Hence, it is highly likely that in reality, water consumption of the glasshouse would be lower than that outlined in Section 4. This is considered to provide certainty in the determination of water neutrality. In addition, it is likely that a more efficient method of growing produce for local consumption, as well as benefits associated with transport, would lead to lower water demand overall, although this would be likely to be outside the SNWSZ.

5.2 Source of water offset

Sluetts Farm Rainwater Harvesting System

5.2.1 Christ's Hospital Foundation holds a portfolio of properties across the SNWRZ in which offsetting measures can be implemented. One of these properties is Sluetts Farm, located approximately 2km to the southeast of the Proposed Development.

5.2.2 A planning application at Sluetts Farm was submitted to HDC in 2023 for the *"Erection of temporary agricultural workers dwelling"* [sic], planning reference DC/23/0306. Within this planning application, a large, bespoke rainwater harvesting system (RHS) was proposed to be installed at one of the barns on site. The application was validated on 20 February 2023 and the application was permitted by HDC on 23 February 2024.

5.2.3 The Water Neutrality Statement written for the planning application at Sluetts Farm shows that the RHS would provide a net reduction in mains water consumption across the site (after taking into account the farm and worker's dwelling) of approximately 2,625 litres/day. The gross capacity provided by the RHS would be 2,827 litres/day[1]. The additional water demand from the workers' dwelling proposed at Sluetts Farm is only 203 litres/day. Net of this demand, there is therefore an

[1] A copy of the approved Water Neutrality Statement for Sluetts Farm detailing this and supporting RHS information are enclosed within the Keepers Cottage WNS – Appendix A, but in brief: the water collected by this RHS at Sluetts Farm was proposed to replace part of the mains-supplied water that has historically been consumed for agricultural purposes. Calculations were provided by the RHS supplier, based upon local average rainfall patterns, the barn roof areas, and the assumption that 90% of the water will pass to the storage tanks. This resulted in an estimated total of 1,031,985 litres per year going to storage across the RHS system, an average of 2,827 litres per day.

excess offset by the RHS of 2,625 litres/day – i.e. there would be 2,625 fewer litres of mains-supplied water consumed per day at Sluetts Farm because of the RHS that was proposed as part of the planning application.

5.2.4 The evidence presented within the original Water Neutrality Statement for the Sluetts Farm development, which outlined details of historical mains water consumption, the RHS and the resultant anticipated volumetric reduction in mains water consumption, even after the erection of an agricultural worker's dwelling, has been referenced within the Planning Officer's Report associated with the Sluetts Farm planning application, attached as an appendix within the Keepers Cottage WNS (Appendix A - Keepers Cottage Water Neutrality Statement). This suggests that Horsham District Council accepts the evidence, and agrees with the volume of water available as an offset due to the installation of the RHS at Sluetts Farm.

Westons Farmhouse Annexe

5.2.5 Due to the significant available capacity in the system, the RHS at Sluetts Farm has been proposed to offset additional water demand arising from other CHF development. This has been made possible due to the forward planning by CHF to positively contribute to managing water neutrality in the SNWRZ area.

5.2.6 A planning application at Westons Farmhouse was submitted to HDC in December 2023 for the *"Conversion of annexe to an independent dwelling"*, planning reference DC/23/2309. This application was validated on 31 January 2024 and the application was permitted on 17 September 2024.

5.2.7 Originally, a Water Neutrality Statement was written for Westons Farmhouse Annexe. Through the use of HDC's methodology to determine neutrality, the WNS calculated an additional water consumption of 253 litres/day due to the Proposed Development, which was to be offset in full by the RHS at Sluetts Farm.

5.2.8 On the 20 May 2024, the Case Officer at HDC advised that Westons Farmhouse Annexe could utilise a fallback position to achieve water neutrality. This was on the basis that there was extant planning permission for the refurbishment of the building, and that the new planning permission sought was for a change in use. Hence, it was argued that should the change of use application be refused, and the fallback position of the existing consent be implemented, as the Applicant would intend, there would still be water consumption at the annexe amounting to 253 litres/day.

Keepers Cottage

5.2.9 Similarly, the RHS at Sluetts Farm has been proposed to offset additional water demand arising from another CHF development at Keepers Cottage, Coolham Road, Coolham, Horsham, West Sussex RH13 8GP. With respect to this development, a planning application was submitted to HDC in March 2024 for the *"Demolition of existing 2No cottages and erection of 1No dwelling with associated landscaping and car parking"*, planning reference DC/24/0498. This planning application was validated on 28 March 2024 and the application was permitted by HDC on 16 January 2025.

5.2.10 The Keepers Cottage WNS is attached at Appendix A, but to summarise: it determined that the development proposed would result in an additional 98 l/p/d of water consumed, which equates

to an additional 270 litres/day when adjusted for anticipated occupancy rates. The WNS proposed that this additional water demand be offset in full by the RHS at Sluetts Farm. The Keepers Cottage WNS also contains the Westons Farmhouse Annexe WNS as its Appendix A, and the Sluetts Farm Planning Officer Report as its Appendix B.

5.2.11 To determine the volume of water offset left available within the RHS at Sluetts Farm, the Keepers Cottage WNS made reference to the anticipated water demand quoted within the WNS for the Westons Farmhouse Annexe application, prior to the advice received by the Case Officer on the 20 May 2024. As the Westons Farmhouse Annexe application subsequently utilised the fallback position, which was accepted by HDC, an additional 253 litres/day exists within the RHS at Sluetts Farm above what is quoted within the Keepers Cottage WNS.

5.2.12 Table 5-1 provides an up-to-date account of water offsets to be provided by the Sluetts Farm RHS. There would still be 2,345 litres/day remaining mains-water reduction across the SNWRZ due to the RHS at Sluetts Farm available as an offset, even after the developments at Sluetts Farm and Keepers Cottage are accounted for.

Table 5-1: Reduction in mains water demand across the SNWRZ

Source	Water demand or offset (litres/day)	Net change in mains water demand across the SNWRZ (running total, litres/day)
Installation of RHS at Sluetts Farm	-2,827.36	-2,827.36
Erection and occupation of the temporary agricultural worker's dwelling at Sluetts Farm	202.81	-2,624.55
Change in use from ancillary annex to separate residential outbuilding at Westons Farmhouse Annex	253.09	-2,371.46
Replacement of the two Keepers Cottage with one dwelling at West Chillington Lane	279.06	-2,092.40
Westons Farmhouse Annex demand added back to available offset following utilisation of fallback position strategy	-253.09	-2,345.49

5.3 Proposed development water neutrality

5.3.1 The additional water consumption of 916 litres/day due to the Proposed Development can be offset in full by the RHS installed at Sluetts Farm. There is more than sufficient headroom in the capacity created by the anticipated water demand reduction at Sluetts Farm to confidently offset all additional water demand from the Proposed Development; the remaining 2,345 litres/day reduction in mains water consumption at Sluetts Farm is over 2.5 times greater than the additional demand from the Proposed Development.

5.3.2 Table 5-2 provides an account of water offsets to be provided by the Sluetts Farm RHS, including the Proposed Development. There would still be 1,429 litres/day remaining mains-water reduction

across the SNWRZ due to the RHS, which would be available as an offset after the Proposed Development and other developments offset by the RHS.

Table 5-2: Reduction in mains water demand across the SNWRZ, including the Proposed Development

Source	Water demand or offset (litres/day)	Net change in mains water demand across the SNWRZ (running total, litres/day)
Installation of RHS at Sluetts Farm	-2,827.36	-2,827.36
Erection and occupation of the temporary agricultural worker's dwelling at Sluetts Farm	202.81	-2,624.55
Change in use from ancillary annex to separate residential outbuilding at Westons Farmhouse Annex	253.09	-2,371.46
Replacement of the two Keepers Cottage with one dwelling at West Chillington Lane	279.06	-2,092.40
Westons Farmhouse Annex demand added back to available offset following utilisation of fallback position strategy	-253.09	-2,345.49
Erection of glasshouse at Westons Farm	916.27	-1,429.22

5.3.3 This provides certainty that the Proposed Development will not increase the rate of water abstraction for drinking water supplies above existing levels in the Sussex North Water Resource Zone. As per HDC's definition of water neutrality, the Proposed Development can therefore be described as "water neutral", assuming the RHS at Sluetts Farm is operational prior to operation of the new glasshouse proposed.

6 Conclusion

6.1.1 This Water Neutrality Statement has been prepared for the proposed erection of a glasshouse at Westons Farm, Westons Hill, Itchingfield, Horsham, West Sussex, RH13 0BD. The statement sets out a baseline of zero existing water consumption, an estimate of additional consumption arising from the glasshouse, and a proposed source of offsite mains water consumption reduction at another property owned by the Applicant to fully offset the additional water use.

6.1.2 The Proposed Development would therefore be water neutral.

6.1.3 The need for a Water Neutrality Statement is in the context of the current delay to the Horsham District Local Plan following the release of Natural England's position statement regarding the use of water within the Sussex North Water Supply Zone (SNWSZ). The consequence of this has been to delay development which may contribute to wider social, economic and environmental commitments made by Horsham District Council. This application, along with others, is being progressed and provides a water neutrality solution through offsetting to enable much-needed sustainable development to proceed. Horsham District Council, Southern Water and Natural England are working in partnership towards a strategic Water Neutrality Strategy for the area. In parallel, Southern Water is working on its Water Resource Management Plan 2024, which is addressing the same matters. In addition, Southern Water is preparing a Sustainability Study, which will conclude in March 2025, what level of water abstraction from groundwater at Hardham is sustainable.

6.1.4 The Proposed Development would increase the potential demand for water abstraction for drinking water supply by 916 litres/day above existing levels in the SNWSZ and would therefore not be considered water neutral prior to offsetting.

6.1.5 Christ's Hospital Foundation (CHF) is to install a rainwater harvesting system at its Sluetts Farm property to provide a very substantial mains water demand reduction, which would be available to offset changes in water consumption at Sluetts Farm and at other properties within the CHF portfolio, including the Proposed Development.

6.1.6 The rainwater harvesting system at Sluetts Farm has a calculated average daily water supply capacity of 2,827 litres, which would replace mains water supply to the farm for agricultural purposes. This means that there would be a 2,827 litre/day reduction in water the rate of water abstraction in the SNWRZ. Net of 203 litres/day of water demand to be offset at Sluetts Farm for an agricultural worker's dwelling, there remains a 2,625 litre/day reduction in the rate of water abstraction in the SNWRZ due to the rainwater harvesting system.

6.1.7 Planning permission for the agricultural worker's dwelling has since been granted. The evidence presented within the original Water Neutrality Statement for the Sluetts Farm development, which outlined details of historical mains water consumption, the RHS and the resultant anticipated volumetric reduction in mains water consumption, even after the erection of an agricultural worker's dwelling, has been referenced within the Planning Officer's Report associated with that planning application. This indicates that Horsham District Council accept the evidence, and agree with the volume of water available as an offset due to the installation of the RHS at Sluetts Farm.

6.1.8 Since then, a planning application for another CHF development, the proposed replacement of the two Keepers Cottage with one dwelling at West Chillington Lane, Coneyhurst, has been submitted, with planning permission granted on 16th January 2025. Within the associated Water Neutrality Statement, it was calculated that this development would increase the potential demand for water abstraction for drinking water supply by 279 litres/day above existing levels in the SNWRZ. The Water Neutrality Statement proposed that this additional demand also be offset in full by the RHS at Sluetts Farm. This would leave 2,345 litres/day available as an offset after both the agricultural worker's dwelling and the Keepers Cottage developments.

6.1.9 The remaining 2,345 litres/day available as an offset is more than 2.5 times the 916 litres/day increase in water demand for the proposed glasshouse, and can therefore fully provide the necessary offset capacity to ensure the Proposed Development is water neutral. It is noted that the remaining mains water demand reduction to be achieved by Christ's Hospital Foundation through the rainwater harvesting system would make a positive contribution to sustainable water management in the SNWSZ area, beyond offsetting the Sluetts Farm, Keepers Cottage and proposed Westons Farm Glasshouse developments.

6.1.10 Without prejudice to the view that the competent authority for water abstraction licensing is the Environment Agency, the evidence provided in this Water Neutrality Statement provides a firm basis and strong incentive to progress the planning application from a water neutrality perspective.

References

Department for Levelling Up, Housing and Communities. (2023). *National PLanning Policy Framework.*

Environment Agency. (2003). *Optimum Use of Water For Industry and Agriculture: Phase 3.* Bristol: Environment Agency.

HM Government. (1992). *Council Directive 92/43/EEC.* Retrieved from Legislation.gov.uk: https://www.legislation.gov.uk/eudr/1992/43/contents

HM Government. (2009). *Directive 2009/147/EC of the European Parliament and of the Council.* Retrieved from Legislation.gov.uk: https://www.legislation.gov.uk/eudr/2009/147

HM Government. (2017). *The Conservation of Habitats and Specifes Regulations.* Retrieved from legislation.gov.uk: https://www.legislation.gov.uk/uksi/2017/1012/regulation/63

Horsham District Council. (2015). *Horsham District Planning Framework.* Retrieved from Horsham District Council: https://www.horsham.gov.uk/__data/assets/pdf_file/0016/60190/Horsham-District-Planning-Framework-November-2015.pdf

Horsham District Council. (2023, December). *Water neutrality and planning applications*. Retrieved from Horsham District Council: https://www.horsham.gov.uk/planning/water-neutrality-in-horsham-district/water-neutrality-and-planning-applications

Horsham District Council. (2023, June 16). *Water neutrality and Planning Policy*. Retrieved from Horsham District Council: https://www.horsham.gov.uk/planning/water-neutrality-in-horsham-district/water-neutrality-and-planning-policy

London Politica. (2024, April). *What technological innovations could strengthen the UK Government's approach to addressing the security implications of climate change?* Retrieved from UK Parliament Committees: https://committees.parliament.uk/writtenevidence/130006/pdf/

Rajaseger, G., Chan, K., Yee Tan, K., Ramasamy, S., Khin, M., Amaladoss, A., & Kadamb Haribhai, P. (2023). Hydroponics: current trends in sustainable crop production. *National Library of Medicine*, 925-938.

RSPB. (2023). *Pullborough Brooks*. Retrieved from RSPB: https://www.rspb.org.uk/reserves-and-events/reserves-a-z/pulborough-brooks/

Appendix A - Keepers Cottage Water Neutrality Statement

Water Neutrality Statement

Keepers Cottage, Coolham Road, Coolham, Horsham, West Sussex RH13 8GP

savills

Document Control

Document title	Water Neutrality Statement
Version No.	Rev0
Date Approved	19 March 2024
Date 1st Issued	22 March 2024

Version History

Version	Date	Authored by:	Reviewed by:	Approved by:	Description of change
Rev 0	March 2024	Miles Ryan-Cummings	n/a	n/a	Initial draft for internal review
Rev 1	March 2024	Miles Ryan-Cummings	Tom Dearing	Tom Dearing	Initial issue for client review
Rev 2	March 2024	Miles Ryan-Cummings	Dan Smyth	Dan Smyth	Final draft

Table of Contents

1 Introduction 3

2 Background 5

2.1 Keepers Cottages 5

2.2 Site description 5

2.3 Proposed development 6

2.4 Water neutrality in Horsham District 9

2.5 Water neutrality work undertaken in Horsham District 11

3 Baseline Calculations 14

4 Proposal Demand 15

4.1 Fittings approach estimation 15

4.2 Occupancy and anticipated consumption 17

4.3 Water neutral? 17

5 Efficiency and offsetting measures 18

5.1 Efficiency and offsetting hierarchy 18

5.2 Source of water offset 18

5.3 Proposed development water neutrality 20

6 Conclusion 22

7 References 24

Appendix A - Westons Farmhouse Annexe Water Neutrality Statement 25

Appendix B – Sluetts Farm Planning Officer Report 77

List of Tables

Table 2.1: Water fittings schedule 8

Table 4.1: Part G output – anticipated PCC 16

Table 4.2: Determining water neutrality 17

Table 5.1: Reduction in mains water demand across the SNWRZ 20

Table 5.2: Reduction in mains water demand across the SNWRZ, including the Proposed Development 21

List of Figures

Figure 2.1: Site location and wider surroundings 6

Figure 2.2: Internal layout of proposed four-bedroom dwelling 7

1 Introduction

1.1.1 This Water Neutrality Statement (WNS) has been prepared to accompany a full planning application submitted to Horsham District Council (HDC) on behalf of Christ's Hospital Foundation (CHF; the Applicant) for the following development proposal at Keepers Cottage, Coolham Road, Coolham, Horsham, West Sussex RH13 8GP:

"Demolition of existing Keepers Cottages, and erection of one residential dwelling and associated infrastructure."

1.1.2 CHF is a registered charity, whose principal objective is to aid the advancement of education for children, principally for the benefit of those who have social, financial and other specific needs. The assets and endowments of the Foundation are used to support more than 600 bursary places at the school. The ability of the Foundation to meet the financial needs of the school depends critically on funding which derives from the endowment and returns from their investments.

1.1.3 The opportunities provided by the Foundation's land are directly linked to its charitable purposes. The Foundation views the Proposed Development as an opportunity to provide capital to support the objectives of the charity while improving local, sustainable, housing supply.

1.1.4 On 14 September 2021, HDC received a Position Statement from Natural England (NE). In this Statement, NE explains that it could not be concluded that water abstraction for drinking water supplies within the Sussex North Water Resource Zone (SNWRZ; also referred to as the 'Sussex North Water Supply Zone', SNWSZ) was not having a negative impact on a number of designated sites including Amberley Wild Brooks Site of Special Scientific Interest (SSSI) and Pulborough Brooks SSSI. These form part of the Arun Valley Special Protection Area (SPA), Arun Valley Special Area of Conservation (SAC) and Arun Valley Ramsar site. As a result, NE advised HDC that any new development that takes place within Horsham must not add to this negative impact, i.e. that all development should be water neutral.

1.1.5 All applications in the affected area are now expected to be supported by a WNS, which will help with the Appropriate Assessment under the Habitats Regulations. Where a proposal overlaps with other competent authorities' areas of responsibility, the lead competent authority should be identified.

1.1.6 In agreeing the lead competent authority, this should be based on who has the:

- best technical expertise – when a technical issue is the most important factor in assessing the impact of the proposal
- main interest in cross-boundary cases
- capacity to manage where there are many complex and cross-boundary issues

1.1.7 A WNS has been made a planning application validation requirement in Horsham. The application site falls within the SNWSZ as defined by NE. Hence, this statement responds to water neutrality obligations set out by HDC and NE in relation to the Proposed Development.

1.1.8 This WNS follows the guidance set out by HDC on its 'Water neutrality and planning applications' webpage, which is updated periodically and was accessed 8 March 2024 (Horsham District Council, 2023a). This statement includes all of the elements that HDC expect a WNS to include based on the website's guidance.

2 Background

2.1 Keepers Cottages

2.1.1 Keepers Cottages have been subject to a number of planning applications, dating back to 1992 on Horsham District Council's online planning register. The most recent planning application is detailed below as the issue of water neutrality was relevant to its determination.

2.1.2 In November 2021, a planning application was submitted for the demolition of the existing Keepers Cottages and erection of a relocated two-storey residential dwelling with access, landscaping and associated infrastructure (application ref: DC/21/2563). This planning application was refused in January 2022 and an appeal was made, which was subsequently dismissed.

2.1.3 In the appeal decision letter the Inspector noted that they *"could not confidently conclude that water neutrality has been demonstrated*" and emphasised that the *"burden of proof is high and on the basis of the available evidence, I* [the Inspector] *cannot confidently conclude the integrity of the Arun Valley Sites would not be adversely affected."* On this basis it is understood that the WNS related to this planning application and subsequent appeal did not sufficiently evidence existing or anticipated water consumption in accordance with Horsham District Council's "*Water neutrality and planning applications"* guidance (Horsham District Council, 2023a), or through utilisation of the Building Regulations Part G Water Efficiency Calculator.

2.1.4 The WNS presented here accompanies a new planning application for the replacement of the two Keepers Cottages with one dwelling at Keepers Cottage, Coolham Road, Coolham, Horsham, West Sussex RH13 8GP. It robustly assesses the existing and anticipated water consumption associated with the Proposed Development, following the guidance set out on HDC's 'Water neutrality and planning applications' webpage (Horsham District Council, 2023a), and utilises the Building Regulations Part G Water Efficiency Calculator (HM Government, 2015).

2.2 Site description

2.2.1 The site consists of two unoccupied, semi-detached cottages located approximately 700 m to the northeast of Coneyhurst. The site is owned by the Christ's Hospital Foundation (CHF).

2.2.2 Figure 2.1 illustrates the site location and wider surroundings, reproduced from the Planning Statement associated with this application. The site is considered to be located in a rural location, immediately surrounded by agricultural fields and woodland. The River Adur is located approximately 425 m to the north of the site. Together with tributaries, it flows from the north-west to the south-east between West Chiltington lane and Coolham Road. The closest residential properties are located approximately 600 m from the site as the crow flies on West Chiltington Lane to the west and Billingshurst Road (A272) to the south of the site. There are also a number

of commercial facilities located within the wider surroundings including Court Farm (380 m to the west), Orchard Business Park (1.2 km to the north east) and Leech Auto Services (1.2 km to the east).

2.2.3 The site falls under the jurisdiction of HDC and is within Billingshurst Parish. It lies outside of any designated Built Up Area Boundaries and as such is located in the countryside in planning policy terms.

Figure 2.1: Site location and wider surroundings

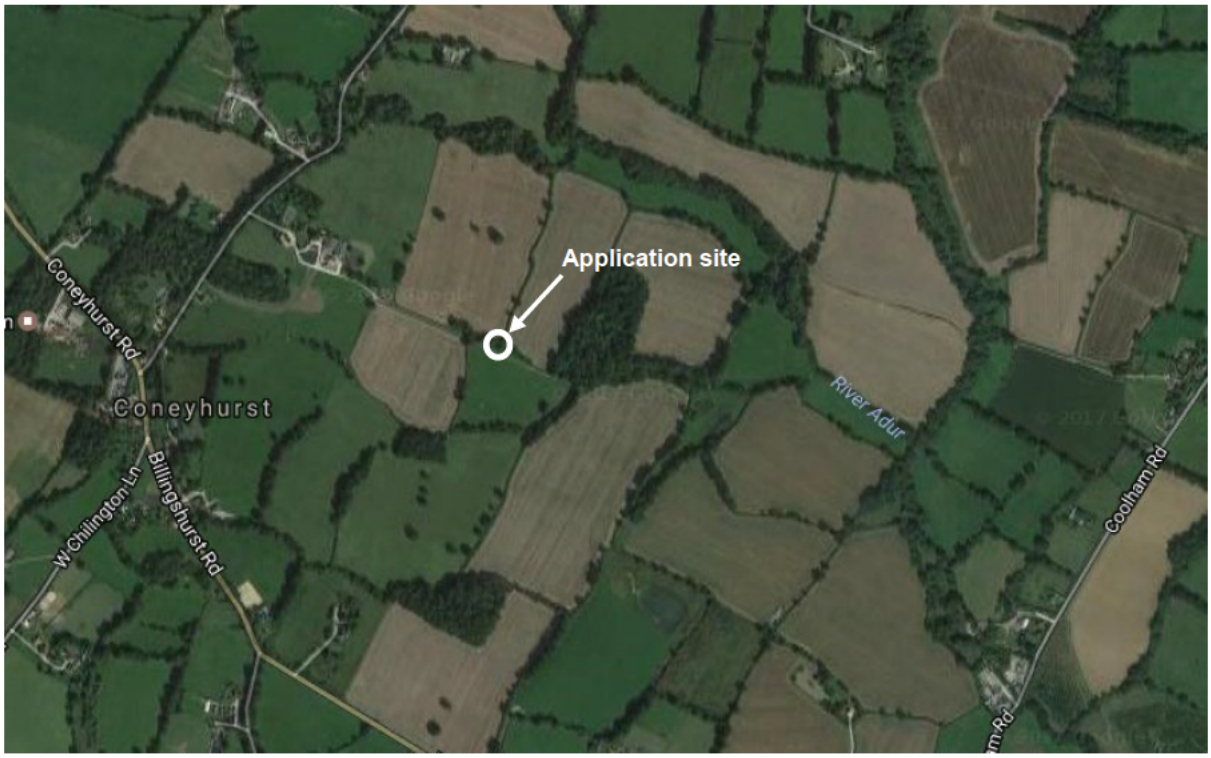

2.3 Proposed development

2.3.1 The application this WNS accompanies is for the demolition of the existing two unoccupied semi-detached cottages, and erection of one residential dwelling at the same site.

2.3.2 As the existing Keepers Cottages are unoccupied, there is no existing water consumption at the site. As such the existing internal layout is not required to be considered for this WNS.

2.3.3 Figure 2.2 illustrates the internal layout of the Proposed Development. The sources of water consumption within the proposed dwelling will be: the en-suite, bathroom, ground floor WC, utility room and kitchen. A schedule of water-consuming fittings and appliances is presented in Table 2-1. These fittings form the basis of the subsequent Building Regulations Part G calculations. Flow rates and water consumption figures have been derived from product specifications.

Figure 2.2: Internal layout of proposed four-bedroom dwelling

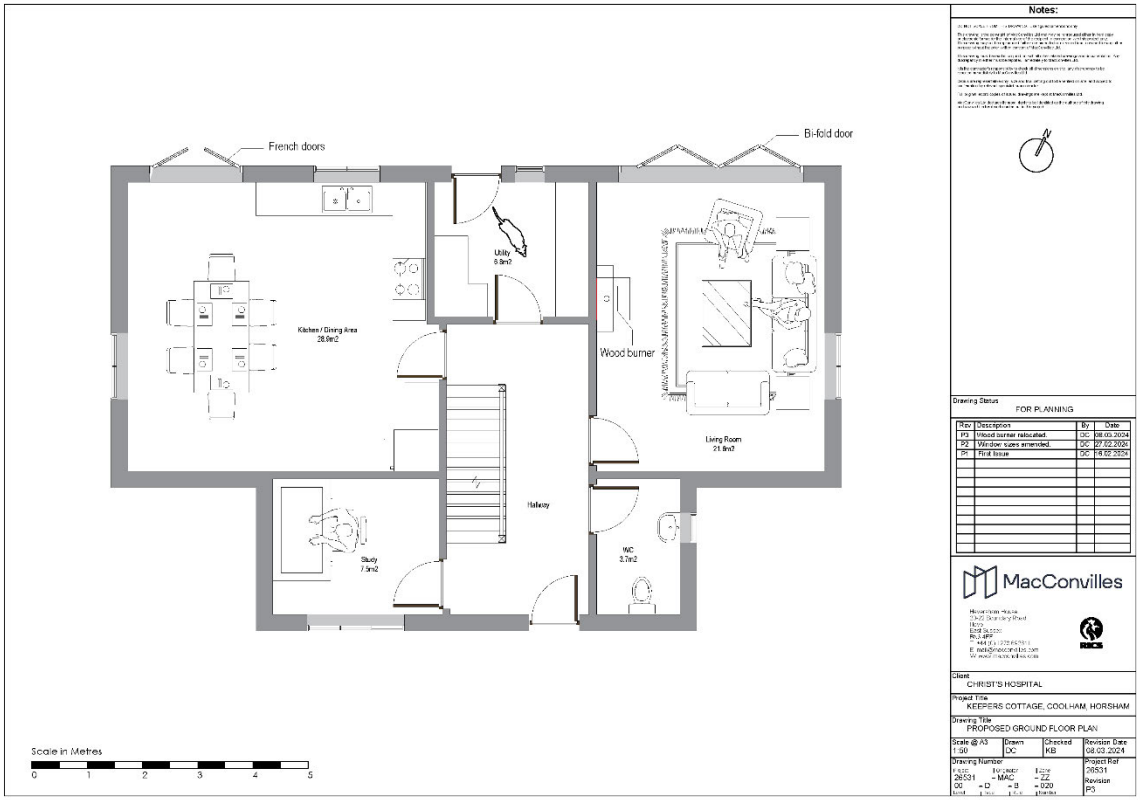

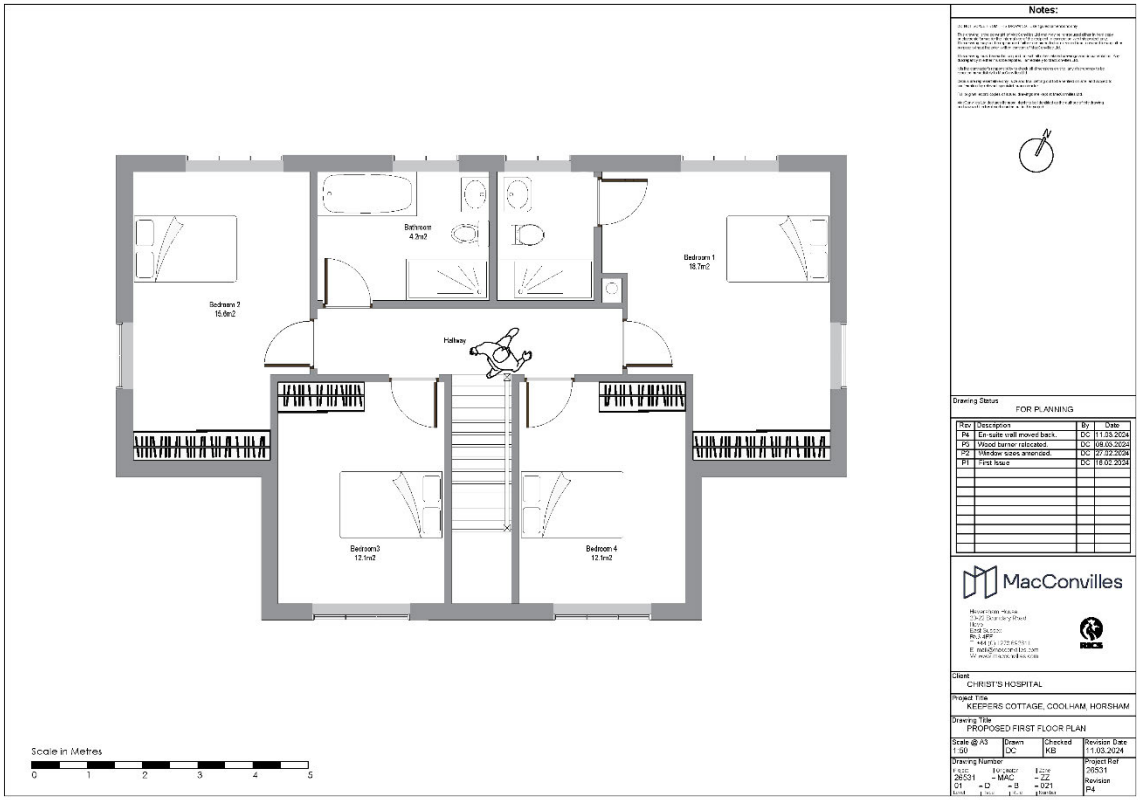

Table 2.1: Water fittings schedule

Fitting	Measure (units)	Value	Product details
Bathroom			
WC (dual flush)	Flush volume (litres)	Full flush: 4.50 Half flush: 3.00	EcoDelux Metro Water Saving Close Coupled Modern Toilet + Soft Close Seat
Bathroom taps	Flow rate (litres/min)	3.50	Capri Eco Click basin mixer tap
Bath	Capacity to overflow (litres)	185.00	Ideal Standard Tempo Cube 1700 x 700mm OTH Single Ended Idealform Bath E258001
Shower	Flow rate (litres/min)	8.00	Prism Exposed Fixed Head Shower with Diverter and Kit
En-suite			
WC (dual flush)	Flush volume (litres)	Full flush: 4.50 Half flush: 3.00	EcoDelux Metro Water Saving Close Coupled Modern Toilet + Soft Close Seat
Bathroom taps	Flow rate (litres/min)	3.50	Capri Eco Click basin mixer tap
Shower	Flow rate (litres/min)	8.00	Prism Exposed Fixed Head Shower with Diverter and Kit
Ground Floor WC			
WC (dual flush)	Flush volume (litres)	Full flush: 4.50 Half flush: 3.00	EcoDelux Metro Water Saving Close Coupled Modern Toilet + Soft Close Seat
Bathroom taps	Flow rate (litres/min)	3.50	Capri Eco Click basin mixer tap
Utility Room			
Kitchen/utility taps	Flow rate (litres/min)	4.50	Howdens Lamona Ashworth sink with Franke Davos J Monobloc Sink Mixer Decor Steel

Fitting	Measure (units)	Value	Product details
Washing machine	Litres per kilogram of dry load	4.75	LG F4V712WTSE 12kg TurboWash Steam Washing Machine
Kitchen			
Dishwasher	Litres per place setting	0.43	BEKO Integrated dishwasher with Save Water BDIN38641C
Kitchen/utility taps	Flow rate (litres/min)	4.50	Howdens Lamona Ashworth sink with Franke Davos J Monobloc Sink Mixer Decor Steel

2.4 Water neutrality in Horsham District

2.4.1 The issue of water neutrality in Horsham District arose in September 2021 as a result of the position statement from Natural England, referred to above, which stated that water demand within the SNWSZ might have a potential impact on internationally protected sites and species within Arun Valley SPA, Arun Valley SAC and Arun Valley Ramsar site, most notably an impact to the Little Whirlpool Ramshorn Snail. The position statement stated that the *"Sussex North Water Supply Zone includes supplies from a groundwater abstraction which cannot, with certainty, conclude no adverse effect on the integrity of the aforementioned designated sites."* The mechanism by which Natural England concluded there might be a link between development and increased groundwater abstraction was not explained, however, and neither was the link between abstraction of groundwater and water quality or quantity at the designated sites.

2.4.2 These sites receive statutory protection under the Conservation of Habitats and Species Regulations 2017 (the Regulations) (HM Government, 2017) as amended post-Brexit. These Regulations transpose into UK legislation the 'Habitats Directive' 1992 (92/43/EEC) (HM Government, 1992) and the 'Birds Directive' 2009 (2009/147/EC) (HM Government, 2009). National planning policy sets out that listed Ramsar sites should be considered in the same way as if they had been classified or designated as SACs or SPAs, as stated in paragraph 181 of the National Planning Policy Framework (Department for Levelling Up, Housing and Communities, 2023).

2.4.3 The Regulations impose a duty on local planning authorities (competent authorities) to carefully consider whether any proposals may have a significant effect on a European designation, either alone or in combination with other plans or projects. In most circumstances, permission may only be granted for a plan or project to proceed if it has been ascertained that it will not have an adverse effect on the integrity of any such designation.

2.4.4 The SNWSZ includes the whole of the administrative areas of HDC and Crawley Borough Council, as well as the north of Chichester District Council and areas within the South Downs National Park Authority. The impact of the position statement has effectively resulted in a moratorium on the positive determination of planning applications which require mains water use in the affected areas unless water neutrality can be demonstrated.

2.4.5 Definitions of water neutrality often vary depending on the context in which the definition is used. HDC defines water neutrality as:

"Development that takes place which does not increase the rate of water abstraction for drinking water supplies above existing levels." (Horsham District Council, 2023a)

2.4.6 NE gave a slightly different definition of water neutrality in its 2021 position statement to HDC:

"The definition of water neutrality is the use of water in the supply area before the development is the same or lower after the development is in place."

2.4.7 Neither definition addresses abstraction of groundwater, appearing instead to be aiming for either no more use of water or no more use of water for drinking water supplies. This WNS will use HDC's definition of water neutrality, which is somewhat more precise than NE's.

Further consideration of water neutrality

2.4.8 It should be noted that the real issue, as acknowledged by Horsham District Council, surrounding water use and the protected sites and species within the Arun Valley SPA, Arun Valley SAC and Arun Valley Ramsar site, is a potential link between groundwater abstraction at Hardham and an adverse impact on the integrity of the protected site. There also needs to be a link between development and increased groundwater abstraction at Hardham. Therefore, it is not true that water use across the whole of the SNWSZ must be frozen. This is because water supply to the SNWSZ is not only from Hardham. Hence, water use across the SNWSZ could increase as long as this does not increase groundwater abstraction at Hardham (i.e. water consumption across the SNWSZ can increase if water supply is sourced from sources other than Hardham groundwater abstraction).

2.4.9 There is ample water available to Southern Water (SW) to supply projected development needs without additional, or for that matter *any* groundwater abstraction at Hardham. SW, under the Water Industry Act, have a duty to supply sufficient water as demanded, whilst also protecting the environment and specifically Habitats Regulations protected sites. The Environment Agency (EA), through the on-going Water Resources Management Plan process (currently WRMP 2024), are requiring SW to identify its supply sources which do not rely on increasing groundwater abstraction from Hardham.

2.4.10 SW, in a 'Statement of Response' to consultation under WRMP 2024, indicated that they are able to supply water in the SNWSZ without increasing groundwater

abstraction at Hardham. Hence, development, such as the one which is the subject of this Water Neutrality Statement, can proceed without increasing groundwater abstraction at Hardham, and therefore without adverse impacts to the relevant protected sites.

Local planning policy

Horsham District Planning Framework 2015

2.4.11 The Horsham District Planning Farmwork 2015 (Horsham District Council, 2015) is the current, adopted Local Plan covering the jurisdiction of HDC. There is no specific policy regarding water neutrality requirements in the current Local Plan, which is the applicable planning policy for determination of this application.

2.4.12 However, the Local Plan does encourage water efficiency in Policy 37 Sustainable Construction, which states: "*Proposals must seek to improve the sustainability of development. To deliver sustainable design, development should incorporate the following measures where appropriate according to the type of development and location:* [inter alia] *Limit water use to 110 litres/person/day".*

Draft Horsham District Local Plan 2023-2040 (Regulation 19)

2.4.13 The Regulation 19 Horsham District Local Plan 2023-2040 (Draft Local Plan) is currently available in draft version, and is due to undergo further public consultation and examination in principle in 2024. The Draft Local Plan serves, in part, as a response to the aforementioned position statement issued by NE, acknowledging that the key challenge for the district is continuing to protect the environment while also achieving growth. As the Local Plan is an emerging draft, yet to undergo examination and be adopted, it holds limited weight in planning terms at present, but indicates the possible future direction of policy in the area. Although the specifics of future policy (yet to be adopted) are not yet fixed, this Water Neutrality Statement does provide the type of the assessment of water efficiency and offsetting that may be sought by emerging policy.

2.5 Water neutrality work undertaken in Horsham District

The Sussex North Water Neutrality Study

2.5.1 In response to the issue of water neutrality in North Sussex, a study was commissioned by HDC and carried out in three stages, A–C (Horsham District Council, 2023b).

Part A

2.5.2 The first stage of the work on water neutrality was studies that examined the impacts on water neutrality for each local authority area on an individual basis.

Part B

2.5.3 The second stage considered the total (or cumulative) impact of proposed development in all the local authority areas that use Sussex North Water Supply Zone (Horsham District Council, Crawley Borough Council, Chichester District Council, West Sussex County Council and the South Downs National Park). The purpose of this work was to understand how water demand may increase in the future and work out how much water will need to be 'offset' through water neutrality.

Part C

2.5.4 The '*Part C'* – Mitigation Strategy was published in December 2022. This study built upon and updated previous work, and set out a water neutrality strategy for all affected authorities. This included recommending a policy approach with regard to water efficiency standards in new development and setting out principles for an offsetting scheme, which together would allow water neutrality to be achieved by growth identified in local plans.

2.5.5 The Part C Mitigation Strategy proposed the creation of an LPA-led scheme to provide water offsetting, which has since been termed the Sussex North Offsetting Water Scheme (SNOWS). SNOWS is undergoing consultation and has not yet reached the stage of implementation where offsets are available to developers. In the interim therefore it is necessary for developments where water neutrality applies to seek privately developed offsets in order to contribute to meeting the HDC mitigation strategy aims.

Pulborough Brooks

2.5.6 Pulborough Brooks Nature Reserve is managed by the Royal Society for the Protection of Birds (RSPB) to provide the *"perfect condition for wildlife"* (RSPB, 2023). It contains a network of ditches which are the habitat of the threatened little whirlpool ramshorn snail.

2.5.7 A combination of controlled flooding, grazing and hay cutting are used to manage the wet grasslands to create a healthy mosaic of grassland habitats.

2.5.8 The ditches which cross the wet grasslands need clearing out to move water around the site. This is done on rotation, to always keep some of the vegetation which lives there and to give a home to rare wildlife, including the little whirlpool ramshorn snail.

2.5.9 In 2017 the ditches were the focus of a Heritage Lottery funded project "Back from the Brink" which helped create ideal conditions for the rare little ramshorn whirlpool snail and other aquatic species.

Groundwater licensing

2.5.10 Groundwater abstraction is licensed by the Environment Agency. In the case of water abstracted at Hardham, this is managed by Southern Water which applies for the right to abstract water in accordance with population forecasts associated with the

relevant Local Plan, including windfall development. Such applications are accompanied by the relevant environmental information in order to allow the Environment Agency, as competent authority, to conduct Habitats Regulations Assessments and consider licensing in light of this.

2.5.11 Investigations and discussions between Southern Water, the Environment Agency and Natural England are ongoing. However, groundwater abstraction from Hardham has been reduced in accordance with the Environment Agency's ongoing management requirements. SW has confirmed it will not increase groundwater abstraction from Hardham at least until a Sustainability Assessment has been published in March 2025.

3 Baseline Calculations

3.1.1 As per Horsham District Council's definition of water neutrality (development that takes place which does not increase the rate of water abstraction for drinking water supplies above existing levels), it is necessary to calculate the difference between historical and anticipated water consumption at the site. If both values are equal, or if a surplus is generated, then the Proposed Development will comply with or potentially provide an additional positive contribution to the water neutrality ambitions in the SNWSZ. However, if anticipated consumption is higher than historical consumption, then the difference between the two must be offset within the region to achieve HDC's definition of water neutrality.

3.1.2 This section sets out the baseline water demand arising from the Proposed Development in line with guidance from Horsham District Council (Horsham District Council, 2023a). As outline in Section 2, the existing Keepers Cottages, which the Proposed Development is proposed to replace, are currently vacant. Therefore, metered water bills spanning the last three years[1] are not available, and hence there is no existing or (recent) historical water consumption. Thus, a nil baseline is applied to the determination of water neutrality.

[1] suggested as the best way to achieve certainty for baseline calculations in the HDC guidance, where such metering information is available

4 Proposal Demand

4.1 Fittings approach estimation

4.1.1 This section will calculate the anticipated water demand arising from the Proposed Development. The anticipated water consumption (per capita consumption, PCC) of the Proposed Development, expressed in litres per person per day (l/p/d), has been calculated through utilisation of the water efficiency calculator for dwellings, included in Approved Document G (Part G) of the Building Regulations (2015): Sanitation, hot water safety and water efficiency (HM Government, 2015).

4.1.2 A 'Fittings Approach' has been introduced to the Part G calculator which calculates PCC (l/p/d) based on the flow rates and water consumption attributes of sanitary ware and appliances, multiplies by a 'use factor' specified in the Part G calculator, which is based on how often they are likely to be used.

4.1.3 The toilet flush and bath volumes, washing machine and dishwasher water consumption rates, and flow rates for the shower, bathroom and kitchen taps are presented in the water fittings schedule in Table 2-1. Based on the water fittings schedule, the Proposed Development is anticipated to have a PCC of 98 l/p/d, as illustrated in Table 4.1 overleaf.

4.1.4 It should be noted that the Part G calculator applies a weighted average to dual flush WCs, where the part flush volume is afforded a weight of 0.67 and the full flush volume is afforded a weight of 0.33. Hence a figure of 3.5 litres has been used in Table 4.1, being the weighted average value calculated in this way from the flows reported in Table 2.1.

Table 4.1: Part G output – anticipated PCC

Installation Type	Unit of measure	Capacity / flowrate (Equation term 1)	Use factor (Equation term 2)	Fixed use (l/person/day) (Equation term 3)	Litres/person/day =[(1)*(2)]+(3) (4)
WCs (multiple fittings)	Average effective flushing volume (litres)	3.50	4.42	0.00	15.45
Taps (exc. kitchen taps)	Flow rate (l/min)	3.50	1.58	1.58	7.11
Bath (where shower also present)	Capacity to overflow (l)	185.00	0.11	0.00	20.35
Shower (where bath also present)	Flow rate (l/min)	8.00	4.37	0.00	34.96
Kitchen sink taps	Flow rate (l/min)	4.50	0.44	10.36	12.34
Washing machine	l/kg dry load	4.75	2.10	0.00	9.98
Dishwasher	l/place setting	0.43	3.60	0.00	1.55
	(5)	**Total calculated use (l/person/day)** = Σ[column (4)]			**101.73**
	(6)	Contribution from greywater (l/person/day) from Table 4.6 in Part G			0.00
	(7)	Contribution from rainwater (l/person/day) from Table 5.5 in Part G			0.00
	(8)	Normalisation factor			0.91
	(9)	**Total water consumption (CSH)** = [(5)-(6)-(7)]*(8) (l/person/day)			**92.58**
	(10)	External water use			5.00
	(11)	**Total water consumption (Part G)** = (9)+(10) (l/person/day)			**97.58**

4.2 Occupancy and anticipated consumption

4.2.1 As described in Section 2, the Proposed Development is a four-bedroom property. In accordance with HDC's "*Water neutrality and planning applications*" guidance (Horsham District Council, 2023a), the anticipated occupancy rate of the dwelling is 2.86 occupants, based on the extrapolated 2011 census data for Horsham District. This results in a total anticipated water demand for the Proposed Development of **279 litres/day** (97.58 l/p/d * 2.86 people).

4.3 Water neutral?

4.3.1 As mentioned in Section 2, HDC defines water neutrality as:

"Development that takes place which does not increase the rate of water abstraction for drinking water supplies above existing levels."

4.3.2 Water neutrality can therefore be assessed by establishing the difference between existing (baseline) levels and anticipated levels arising from the Proposed Development.

4.3.3 As discussed in Section 3, the baseline water demand at the site is **0 litres/day**, as the existing Keepers Cottages are vacant.

4.3.4 The difference between the baseline and proposed PCC and total consumption is shown in Table 4.2. The results show that there would be an increase in average water consumption relative to the baseline as a result of the Proposed Development This increase would be of **97.58** l/p/d, with a total increase of approximately **279** litres/day based on anticipated occupancy. Therefore, the Proposed Development cannot be determined to be water neutral and offsetting measures are required.

Table 4.2: Determining water neutrality

Consumption Period	Keepers Cottages PCC (l/p/d)	Total Consumption (litres/day)
Baseline	0	0
Anticipated	98	279
Difference	+98	+279

5 Efficiency and offsetting measures

5.1 Efficiency and offsetting hierarchy

5.1.1 As advised by HDC, reducing water consumption in the Proposed Development through the installation of water efficient fittings and appliances should be considered before offsetting.

5.1.2 As presented in Table 2.1 and Table 4.1, the Applicant has proposed to install water-efficient sanitary ware and water fittings throughout the Proposed Development, resulting in a PCC of less than 98 l/p/d. This PCC is over 12 l/p/d more efficient than the requirements set out by Policy 37 (Sustainable Construction) of the Horsham District Planning Farmwork 2015 (Horsham District Council, 2015). Hence, it is deemed that the reduction of water consumption through the installation of water efficient fittings and appliances has been adequately considered.

5.1.3 Despite this, there is anticipated to be approximately 279 more litres of water per day consumed as a result of the Proposed Development, compared to no development at all. To mitigate the increased water consumption in the SNWSZ caused by the Proposed Development (should this application be approved), offsetting is proposed.

5.2 Source of water offset

Sluetts Farm Rainwater Harvesting System

5.2.1 Christ's Hospital Foundation holds a portfolio of properties across the SNWRZ in which offsetting measures can be implemented. One of these properties is Sluetts Farm, located approximately 6.1 km to the northeast of the Proposed Development.

5.2.2 A planning application at Sluetts Farm was submitted to HDC in 2023 for the *"Erection of temporary agricultural workers dwelling"* [sic], planning reference DC/23/0306. Within this planning application, a large, bespoke rainwater harvesting system (RHS) was proposed to be installed at one of the barns on site. The application was validated on 20 February 2023 and Horsham District Council granted planning permission for the development on the 23 February 2024.

5.2.3 The Water Neutrality Statement written for the planning application at Sluetts Farm shows that the RHS would provide a net reduction in mains water consumption across the site (after taking into account the farm and worker's dwelling) of approximately 2,625 litres per day. The gross capacity provided by the RHS would be 2,827 litres per day[2]. The additional water demand from the worker's dwelling

[2] A copy of the Water Neutrality Statement for Sluetts Farm detailing this and supporting RHS information are enclosed within the Westons Farm Annexe WNS - Appendix A, but in brief: the water collected by this RHS at Sluetts Farm was proposed to replace part of the mains-supplied water that has historically been consumed for agricultural purposes. Calculations were provided by the RHS supplier, based upon local average rainfall patterns, the barn roof areas, and the assumption that

proposed at Sluetts Farm is only 203 litres/day. Net of this demand, there is therefore an excess offset by the RHS of 2,625 litres per day – i.e. there would be 2,625 fewer litres of mains-supplied water consumed per day at Sluetts Farm because of the RHS that was proposed as part of the planning application.

5.2.4 The evidence presented within the original Water Neutrality Statement for the Sluetts Farm development, which outlined details of historical mains water consumption, the RHS and the resultant anticipated volumetric reduction in mains water consumption, even after the erection of an agricultural worker's dwelling, has been referenced within the Planning Officer's Report associated with the Sluetts Farm planning application, attached within Appendix B. This suggests that Horsham District Council accepts the evidence, and agrees with the volume of water available as an offset due to the installation of the RHS at Sluetts Farm.

Westons Farmhouse

5.2.5 Due to the significant available capacity in this system, the RHS at Sluetts Farm has been proposed to offset additional water demand arising from other CHF development. This has been made possible due to the forward planning by CHF to positively contribute to managing water neutrality in the SNWRZ area.

5.2.6 A planning application at Westons Farmhouse was submitted to HDC in December 2023 for the *"Conversion of annexe to an independent dwelling"*, planning reference DC/23/2309. This application was validated on 31 January 2024 and a decision by Horsham District Council is pending.

5.2.7 The Westons Farmhouse Water Neutrality Statement is attached at Appendix A, but to summarise: it determined that the conversion of the annexe into a separate independent dwelling would result in an additional 135 l/p/d of water consumed, which equates to an additional 253 litres per day when adjusted for anticipated occupancy rates. The Water Neutrality Statement proposed that this additional water demand be offset in full by the RHS at Sluetts Farm.

5.2.8 Table 5.1 provides a to-date account of water offsets to be provided by the Sluetts Farm RHS, assuming planning permission is granted at Westons Farmhouse. There would still be 2,371 litres per day remaining mains-water reduction across the SNWRZ due to the RHS at Sluetts Farm available as an offset, even after both the development at Westons Farmhouse and the development at Sluetts Farm are accounted for.

90% of the water will pass to the storage tanks. This resulted in an estimated total of 1,031,985 litres per year going to storage across the RHS system, an average of 2,827 litres per day.

Table 5.1: Reduction in mains water demand across the SNWRZ

Source	Water demand or offset (litres/day)	Net change in mains water demand across the SNWRZ (running total, litres/day)
Installation of the RHS at Sluetts Farm	-2,827.36	-2,827.36
Erection and occupation of the temporary agricultural worker's dwelling at Sluetts Farm	+202.81	-2,624.55
Change in use from ancillary annex to separate residential outbuilding at Westons Farmhouse Annex	+253.09	-2,371.46

5.3 Proposed development water neutrality

5.3.1 The additional water consumption of 279 litres/day due to the Proposed Development can be offset in full by the RHS to be installed at Sluetts Farm. There is more than sufficient headroom in the capacity created by the water demand reduction at Sluetts Farm to confidently offset all additional water demand from the Proposed Development; the 2,371 litre per day reduction in mains water consumption at Sluetts Farm, after both the Westons Farmhouse and Sluetts Farm development are accounted for, is eightfold greater than the additional demand from the Proposed Development.

5.3.2 Table 5.2 provides an account of water offsets to be provided by the Sluetts Farm RHS, including the Proposed Development. There would still be 2,092 litres per day remaining mains-water reduction across the SNWRZ due to the RHS, which would be available as an offset after the Proposed Development and other developments offset by the RHS.

5.3.3 This provides certainty that the Proposed Development will not increase the rate of water abstraction for drinking water supplies above existing levels in the Sussex North Water Resource Zone. As per HDC's definition of water neutrality, the Proposed Development can therefore be described as "water neutral", assuming the RHS at Sluetts Farm is operational prior to occupancy of the new dwelling proposed.

Table 5.2: Reduction in mains water demand across the SNWRZ, including the Proposed Development

Source	Water demand or offset (litres/day)	Net change in mains water demand across the SNWRZ (running total, litres/day)
Installation of the RHS at Sluetts Farm	-2,827.36	-2,827.36
Erection and occupation of the temporary agricultural worker's dwelling at Sluetts Farm	+202.81	-2,624.55
Change in use from ancillary annex to separate residential outbuilding at Westons Farmhouse Annex	+253.09	-2,371.46
Replacement of the two Keepers Cottages with one dwelling at West Chillington Lane	+279.06	-2,092.40

6 Conclusion

6.1.1 This Water Neutrality Statement has been prepared for the proposed replacement of the two Keepers Cottages with one dwelling at West Chillington Lane, Coneyhurst. The statement sets out a baseline of zero existing water consumption, an estimate of additional consumption by future occupiers of the new dwelling in line with Horsham District Council's guidance, and a proposed source of offsite mains water consumption reduction at another property owned by the applicant to fully offset the additional water use.

6.1.2 The Proposed Development would therefore be water neutral.

6.1.3 The need for a Water Neutrality Statement is in the context of the current delay to the Horsham District Local Plan following the release of Natural England's position statement regarding the use of water within the Sussex North Water Supply Zone (SNWSZ). The consequence of this has been to delay development which may contribute to wider social, economic and environmental commitments made by Horsham District Council. This application, along with others, is being progressed and provides a water neutrality solution through offsetting to enable much-needed sustainable development to proceed. Horsham District Council, Southern Water and Natural England are working in partnership towards a strategic Water Neutrality Strategy for the area. In parallel, Southern Water is working on its Water Resource Management Plan 2024, which is addressing the same matters.

6.1.4 The Proposed Development would increase the potential demand for water abstraction for drinking water supply by 279 litres per day above existing levels in the SNWSZ and would therefore not be considered water neutral prior to offsetting.

6.1.5 The applicant, Christ's Hospital Foundation (CHF), has proposed a rainwater harvesting system at its Sluetts Farm property to provide a very substantial mains water demand reduction, which would be available to offset changes in water consumption at Sluetts Farm and at other properties within the CHF portfolio, including the proposed replacement of the two Keepers Cottages with one dwelling at West Chillington Lane.

6.1.6 The rainwater harvesting system at Sluetts Farm has a calculated average daily water supply capacity of 2,827 litres, which would replace mains water supply to the farm for agricultural purposes. This means that there would be a 2,827 litre per day reduction in water the rate of water abstraction in the SNWRZ. Net of 203 litres per day of water demand to be offset at Sluetts Farm for an agricultural worker's dwelling, there remains a 2,625 litre per day reduction in the rate of water abstraction in the SNWRZ due to the rainwater harvesting system.

6.1.7 Planning permission for the agricultural worker's dwelling has since been granted. The evidence presented within the original Water Neutrality Statement for the Sluetts Farm development, which outlined details of historical mains water consumption, the RHS and the resultant anticipated volumetric reduction in mains water consumption,

even after the erection of an agricultural worker's dwelling, has been referenced within the Planning Officer's Report associated with that planning application. This indicates that Horsham District Council accept the evidence, and agree with the volume of water available as an offset due to the installation of the RHS at Sluetts Farm.

6.1.8 Since then, a planning application for another CHF development, the proposed change of use of an outbuilding at Westons Farmhouse, has been submitted. Within the associated Water Neutrality Statement, it was calculated that this development would increase the potential demand for water abstraction for drinking water supply by 253 litres per day above existing levels in the SNWRZ. The Water Neutrality Statement proposed that this additional demand also be offset in full by the RHS at Sluetts Farm, leaving 2,371 litres per day available as an offset after both the agricultural worker's dwelling and the Westons Farmhouse developments.

6.1.9 The remaining 2,371 litres per day available as an offset is more than eightfold the 279 litres per day increase in water demand for the Proposed Development at Keepers Cottages, and can therefore fully provide the necessary offset capacity to ensure the Proposed Development is water neutral. It is noted that the remaining mains water demand reduction to be achieved by Christ's Hospital Foundation through the rainwater harvesting system would make a positive contribution to sustainable water management in the SNWSZ area, beyond offsetting the Sluetts Farm, and proposed Westons Farm and Keeper's Cottages developments.

6.1.10 Without prejudice to the view that the competent authority for water abstraction licensing is the Environment Agency, the evidence provided in this Water Neutrality Statement provides a firm basis and strong incentive to progress the planning application from a water neutrality perspective.

7 References

Department for Levelling Up, Housing and Communities. (2023). *National PLanning Policy Framework.*

HM Government. (1992). *Council Directive 92/43/EEC.* Retrieved from Legislation.gov.uk: https://www.legislation.gov.uk/eudr/1992/43/contents

HM Government. (2009). *Directive 2009/147/EC of the European Parliament and of the Council.* Retrieved from Legislation.gov.uk: https://www.legislation.gov.uk/eudr/2009/147

HM Government. (2015). *The Building Regulations 2010. Approved Document G: Sanitation, hot water safety and water efficiency.*

HM Government. (2017). *The Conservation of Habitats and Specifes Regulations.* Retrieved from legislation.gov.uk: https://www.legislation.gov.uk/uksi/2017/1012/regulation/63

Horsham District Council. (2015). *Horsham District Planning Framework.* Retrieved from Horsham District Council: https://www.horsham.gov.uk/__data/assets/pdf_file/0016/60190/Horsham-District-Planning-Framework-November-2015.pdf

Horsham District Council. (2023a, July 13). *Water neutrality and planning applications*. Retrieved from Horsham District Council: https://www.horsham.gov.uk/planning/water-neutrality-in-horsham-district/water-neutrality-and-planning-applications

Horsham District Council. (2023b, June 16). *Water neutrality and Planning Policy*. Retrieved from Horsham District Council: https://www.horsham.gov.uk/planning/water-neutrality-in-horsham-district/water-neutrality-and-planning-policy

RSPB. (2023). *Pullborough Brooks*. Retrieved from RSPB: https://www.rspb.org.uk/reserves-and-events/reserves-a-z/pulborough-brooks/

Appendix A - Westons Farmhouse Annexe Water Neutrality Statement

Water Neutrality Statement

Westons Farmhouse Annexe

Document Control

Document title	Water Neutrality Statement
Version No.	Rev2
Date Approved	20th December 2023
Date 1st Issued	20th December 2023

Version History

Version	Date	Authored by:	Reviewed by:	Approved by:	Description of change
Rev 0	Dec 2023	Miles Ryan-Cummings	n/a	n/a	Initial draft for internal review
Rev 1	Dec 2023	Miles Ryan-Cummings	Tom Dearing	Tom Dearing	Initial issue for client review
Rev 2	Dec 2023	Miles Ryan-Cummings	Tom Dearing	Tom Dearing	Final

Table of Contents

1 Introduction 3

2 Background 4

2.1 Westons Farmhouse....4

2.2 Site description....4

2.3 Water neutrality in Horsham District....8

2.4 Water neutrality work undertaken in Horsham District....9

3 Baseline Calculations 11

3.2 Baseline demand estimated with Part G Calculator....11

3.3 Actual occupancy and baseline demand....12

4 Proposal Demand 13

4.1 Fittings approach estimation....13

4.2 Occupancy and anticipated consumption....14

4.3 Water neutral?....14

5 Efficiency and offsetting measures 15

5.1 Efficiency and offsetting hierarchy....15

5.2 Source of water offset....15

5.3 Proposed Development water neutrality....16

6 Conclusion 18

7 References 20

Appendix A – Sluetts Farm Water Neutrality Statement

Appendix B - Service Quote Christs Hospital

List of Tables

Table 2-1: Water fittings schedule....7

Table 4-1: Determining water neutrality....14

Table 5-1: Reduction in mains water demand across the SNWRZ....17

List of Figures

Figure 2-1: Site plan....5

Figure 2-2: Internal layout of existing detached domestic outbuilding....6

Figure 3-1: Part G output – baseline PCC....12

Figure 4-1: Part G output – anticipated PCC....13

1 Introduction

1.1.1 This Water Neutrality Statement (WNS) has been prepared to accompany a full planning application submitted to Horsham District Council (HDC) on behalf of Christ's Hospital Foundation (CHF; the Applicant), for the following development proposal at Westons Farmhouse, Fulfords Rd, Itchingfield, Horsham, RH13 0NR:

"Conversion of outbuilding to independent dwelling"

1.1.2 CHF is a registered charity, whose principal objective is to aid the advancement of education for children, principally for the benefit of those who have social, financial and other specific needs. The assets and endowments of the Foundation are used to support more than 600 bursary places at the school. The ability of the Foundation to meet the financial needs of the school depends critically on funding which derives from the endowment and returns from their investments.

1.1.3 The opportunities provided by the Foundation's land are directly linked to its charitable purposes. The Foundation views the Proposed Development as an opportunity to provide capital to support the objectives of the charity while improving local, sustainable, housing supply.

1.1.4 On 14 September 2021, HDC received a Position Statement from Natural England (NE). In this note, NE explains that it could not be concluded that water abstraction for drinking water supplies within the Sussex North Water Resource Zone (SNWRZ; also referred to as the 'Sussex North Water Supply Zone', SNWSZ) was not having a negative impact on a number of designated sites including Amberley Wild Brooks Site of Special Scientific Interest (SSSI) and Pulborough Brooks SSSI. These form part of the Arun Valley Special Protection Area (SPA), Arun Valley Special Area of Conservation (SAC) and Arun Valley Ramsar site. As a result, NE advised HDC that any new development that takes place within Horsham must not add to this negative impact, i.e. that all development should be water neutral.

1.1.5 All applications in the affected area are now expected to be supported by a WNS, which will help with the Appropriate Assessment under the Habitats Regulations, and this is a planning application validation requirement in Horsham. The application site falls within the SNWSZ as defined by NE. Hence, this statement responds to water neutrality obligations set out by HDC and NE in relation to the Proposed Development.

1.1.6 This WNS follows the guidance set out by HDC on its 'Water neutrality and planning applications' webpage, which is updated periodically and was accessed 13 December 2023 (Horsham District Council, 2023a). This statement includes all of the elements that HDC expect a WNS to include based on the website's guidance.

2 Background

2.1 Westons Farmhouse

2.1.1 Westons Farmhouse was sold by CHF in September 1998. Since then, the current owner has made several planning applications in regard to the site, detailed further below. CHF has since re-purchased the property and outbuildings located within the site boundary.

2.1.2 In 2005, a planning application (DC/05/2481) was submitted for *"External alterations to outbuildings"* but this was refused on 10 August 2006. A second application was submitted in 2007 (DC/07/1722) with the same proposal description and was approved on appeal on 29 June 2009 (APP/Z3825/A/08/2093003).

2.1.3 Since the approval on appeal in 2009, a further application was submitted on 6 September 2017 (DC/17/1981) for *"Alterations and extension to existing detached domestic outbuilding"*. This was a full planning application to allow for general improvements in the character and appearance of the outbuilding. Application DC/17/1981 was approved on 7 December 2017. These works have been implemented and are almost complete.

2.1.4 The application this WNS accompanies is for a new application for, change in use of the detached domestic outbuilding, from an ancillary outbuilding to a separate rental property.

2.2 Site description

2.2.1 The Proposed Development (Westons Farmhouse detached domestic outbuilding) forms part of the wider Westons Farm holding, as shown in Figure 2-1. The Proposed Development sits adjacent to the large detached dwelling of Westons Farmhouse, which is a Grade II Listed Building, with access and drive off Westons Hill, together with its associated garden and paddock area. The drive leads to a large open parking area with the Proposed Development approximately 22m to the east of the farmhouse. The application site lies approximately 900m to the east of the CHF School Campus and is under the jurisdiction of HDC. It also lies within the Itchingfield Neighbourhood Development Plan area.

Figure 2-1: Site plan



2.2.2 The existing detached domestic outbuilding consists of a single storey 'L' shaped building 20.3m long and 11.2m deep. As illustrated by Figure 2-2, the existing outbuilding comprises two bedrooms, one with an en-suite; a separate bathroom; utility area; kitchen/diner; living room; office; and storage space.

2.2.3 The application this WNS accompanies is for a change in use of the detached domestic outbuilding, rather than additional built development or a change in its physical form (which was previously approved, and has been implemented, under permission DC/17/1981). As such, the physical configuration of the outbuilding will not change as a result of this application, and hence, neither will the existing sources of water consumption: namely the ensuite bathroom, main bathroom, utility area and kitchen.

2.2.4 A schedule of water-consuming fittings and appliances is presented in Table 2-1. These fittings will not change as a result of the change in use application and so will form the basis of the subsequent Building Regulations Part G calculations. Flow rates and water consumption figures have been derived from product specifications.

Figure 2-2: Internal layout of existing detached domestic outbuilding

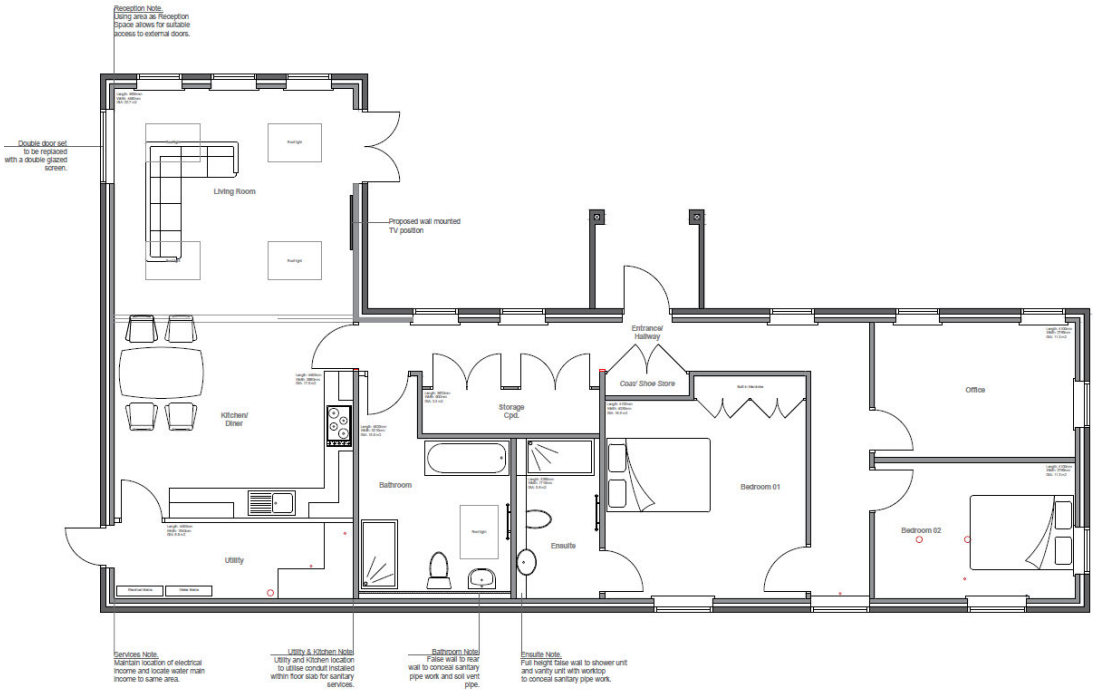

Table 2-1: Water fittings schedule

Fitting	Measure (units)	Value	Product details
Bathroom			
WC (dual flush)	Flush volume (litres)	Full flush: 6 Half flush: 4	Toronto BTW close-coupled WC
Bathroom taps	Flow rate (litres/min)	10	Cruze basin taps
Bath	Capacity to overflow (litres)	185	Ideal Standard Tempo Cube 1700 x 700mm OTH Single Ended Idealform Bath E258001
Shower	Flow rate (litres/min)	Top shower head: 16 Hand shower :11	Monza Modern Round Thermostatic Shower
En-suite			
WC (dual flush)	Flush volume (litres)	Full flush: 6 Half flush: 4	Orchard Derwent round compact back-to-the-wall WC, with Vantage concealed cistern
Bathroom taps	Flow rate (litres/min)	8	Cruze contemporary mono basin mixer tap
Shower	Flow rate (litres/min)	Top shower head: 16 Hand shower :11	Monza Modern Round Thermostatic Shower
Utility Room			
Kitchen/utility taps	Flow rate (litres/min)	8	Cruze Cloakroom mini basin mixer tap to basin
Washing machine	Litres per kilogram of dry load	4.75	LG F4V712WTSE 12kg TurboWash Steam Washing Machine
Kitchen			
Dishwasher	Litres per place setting	0.79	Howdens Lamona white integrated dishwasher 600mm
Kitchen/utility taps	Flow rate (litres/min)	8	Howdens Lamona Ashworth sink with Radstone chrome swan neck dual lever monobloc tap

2.3 Water neutrality in Horsham District

2.3.1 The issue of water neutrality in Horsham District arose in September 2021 as a result of a position statement from Natural England, referred to above, which stated that water demand within the SNWSZ might have a potential impact on internationally protected sites and species within Arun Valley SPA, Arun Valley SAC and Arun Valley Ramsar site, most notably an impact to the Little Ramshorn Whirlpool Snail. The position statement stated that the *"Sussex North Water Supply Zone includes supplies from a groundwater abstraction which cannot, with certainty, conclude no adverse effect on the integrity of the aforementioned designated sites."*

2.3.2 These sites receive statutory protection under the Conservation of Habitats and Species Regulations 2017 (the Regulations) (HM Government, 2017). These Regulations transpose into UK legislation the 'Habitats Directive' 1992 (92/43/EEC) (HM Government, 1992) and the 'Birds Directive' 2009 (2009/147/EC) (HM Government, 2009). National planning policy sets out that listed Ramsar sites should be considered in the same way as if they had been classified or designated as SACs or SPAs, as stated in paragraph 181 of the National Planning Policy Framework (Department for Levelling Up, Housing and Communities, 2023).

2.3.3 The Regulations impose a duty on local planning authorities (competent authorities) to carefully consider whether any proposals may have a significant effect on a European designation, either alone or in combination with other plans or projects. In most circumstances, permission may only be granted for a plan or project to proceed if it has been ascertained that it will not have an adverse effect on the integrity of any such designation.

2.3.4 The SNWSZ includes the whole of the administrative areas of HDC and Crawley Borough Council, as well as the north of Chichester District Council and areas within the South Downs National Park Authority. The impact of the position statement has effectively resulted in a moratorium on the positive determination of planning applications which require mains water use in the affected areas unless water neutrality can be demonstrated.

2.3.5 Definitions of water neutrality often vary depending on the context in which the definition is used. HDC defines water neutrality as:

"Development that takes place which does not increase the rate of water abstraction for drinking water supplies above existing levels." (Horsham District Council, 2023a)

2.3.6 NE gave a slightly different definition of water neutrality in its 2021 position statement to HDC:

"The definition of water neutrality is the use of water in the supply area before the development is the same or lower after the development is in place."

2.3.7 This WNS will use HDC's definition of water neutrality, which is somewhat more precise than NE's.

Local planning policy

Horsham District Planning Framework 2015

2.3.8 The Horsham District Planning Farmwork 2015 (Horsham District Council, 2015) is the current, adopted local plan covering the jurisdiction of HDC. There is no specific policy regarding water neutrality requirements in the current Local Plan, which is the applicable planning policy for determination of this application.

2.3.9 However, the Local Plan does encourage water efficiency in Policy 37 Sustainable Construction, which states: "*Proposals must seek to improve the sustainability of development. To deliver sustainable design, development should incorporate the following measures where appropriate according to the type of development and location:* [inter alia] *Limit water use to 110 litres/person/day;".*

Draft Horsham District Local Plan 2023-2040 (Regulation 19)

2.3.10 The Regulation 19 Horsham District Local Plan 2023-2040 (Draft Local Plan) is currently available in draft version, and is due to undergo public consultation in early 2024. The Draft Local Plan serves, in part, as a response to the aforementioned position statement issued by NE, acknowledging that the key challenge for the district is continuing to protect the environment while also achieving growth. As the Local Plan is an emerging draft, yet to undergo examination and be adopted, it holds limited weight in planning terms at present, but indicates the possible future direction of policy in the area. Although the specifics of future policy (yet to be adopted) are not yet fixed, this Water Neutrality Statement does provide the type of the assessment of water efficiency and offsetting that may be sought by emerging policy.

2.4 Water neutrality work undertaken in Horsham District

The Sussex North Water Neutrality Study

2.4.1 In response to the issue of water neutrality in North Sussex, a study was commissioned by HDC and carried out in three stages, A–C (Horsham District Council, 2023b).

Part A

2.4.2 The first stage of the work on water neutrality was studies that examined the impacts on water neutrality for each local authority area on an individual basis.

Part B

2.4.3 The second stage considered the total (or cumulative) impact of Proposed Development in all the local authority areas that use Sussex North Water Supply Zone (Horsham District Council, Crawley Borough Council, Chichester District Council, West Sussex County Council and the South Downs National Park). The purpose of this work was to understand how water demand may increase in the future and work out how much water will need to be 'offset' through water neutrality.

Part C

2.4.4 The '*Part C'* – Mitigation Strategy was published in December 2022. This study built upon and updated previous work, and set out a water neutrality strategy for all affected authorities. This included recommending a policy approach with regard to water efficiency standards in new development and setting out principles for an offsetting scheme, which together would allow water neutrality to be achieved by growth identified in local plans.

2.4.5 The Part C Mitigation Strategy proposed the creation of an LPA-led scheme to provide water offsetting, which has since been termed the Sussex North Offsetting Water Scheme (SNOWS). SNOWS is undergoing consultation and has not yet reached the stage of implementation where offsets are available to developers. In the interim therefore it is necessary for developments where water neutrality applies to seek privately developed offsets in order to contribute to meeting the HDC mitigation strategy aims.

Pulborough Brooks

2.4.6 Pulborough Brooks Nature Reserve is managed by the Royal Society for the Protection of Birds (RSPB) to provide the *"perfect condition for wildlife"* (RSPB, 2023). It contains a network of ditches which are the habitat of the threatened little ramshorn whirlpool snail.

2.4.7 A combination of controlled flooding, grazing and hay cutting are used to manage the wet grasslands to create a healthy mosaic of grassland habitats.

2.4.8 The ditches which cross the wet grasslands need clearing out to move water around the site. This is done on rotation, to always keep some of the vegetation which lives there and to give a home to rare wildlife, including the little ramshorn whirlpool snail.

2.4.9 In 2017 the ditches were the focus of a Heritage Lottery funded project "Back from the Brink" which helped create ideal conditions for the rare little ramshorn whirlpool snail and other aquatic species.

Groundwater licensing

2.4.10 Groundwater abstraction is licensed by the Environment Agency. In the case of water abstracted at Hardham, this is managed by Southern Water who apply for the right to abstract water in accordance with population forecasts associated with the relevant Local Plan, including windfall development. Such applications are accompanied by the relevant environmental information in order to allow the Environment Agency, as competent authority, to consider licensing in light of this.

2.4.11 Investigations and discussions between Southern Water, the Environment Agency and Natural England are ongoing. However, it is understood that groundwater abstraction from Hardham is being reduced in accordance with the Environment Agency's ongoing management requirements.

3 Baseline Calculations

3.1.1 As per HDC's definition of water neutrality, it is necessary to calculate the difference between historical and anticipated water consumption at the site. If both values are equal, or if a surplus is generated, then the Proposed Development will comply with or potentially provide an additional positive contribution to the water neutrality ambitions in the SNWSZ. However, if anticipated consumption is higher than historical consumption, then the difference between the two must be offset within the region.

3.1.2 This section will calculate the baseline water demand arising from the Proposed Development in line with guidance from HDC (Horsham District Council, 2023a).

3.1.3 Metered water bills spanning the last three years[1] are not available for the outbuilding at Westons Farmhouse, as the conversion work under permission DC/17/1981 (which has included providing a separate meter for the outbuilding) is only recently completed. The alternative approach recommended in the HDC guidance, use of the Building Regulations Part G Calculator (HM Government, 2015), has therefore been taken to calculate baseline per capita consumption (PCC) in the absence of sufficient historical metered water bills.

3.2 Baseline demand estimated with Part G Calculator

3.2.1 As discussed in paragraph 2.2.3, the planning application for which this WNS has been prepared is for a change in use of the detached domestic outbuilding, rather than a change in configuration, i.e. there will be no change to water consuming fittings and appliances before and after the permission should it be granted. Therefore, the fittings schedule outlined in Table 2-1 is applicable to estimate baseline water consumption using the Part G Calculator.

3.2.2 The 'fittings approach' in the Part G Calculator estimates total water consumption (litres/person/day) based on flow rates and water consumption of sanitaryware and appliances, such as those listed in Table 2-1, multiplied by a standard 'use factor' for how often they are likely to be used (Jostec, 2021).

3.2.3 The toilet flush and bath capacity to overflow volumes, washing machine and dishwasher water consumption rates, and flow rates for the shower, bathroom, kitchen and utility taps as listed in in Table 2-1 were derived from their respective product specifications and entered into the Part G Calculator.

3.2.4 The resulting estimated historical baseline PCC for the Proposed Development derived from the Part G Calculator is **135 l/p/d**. The calculation outputs are shown in Figure 3-1.

[1] suggested as the best way to achieve certainty for baseline calculations in the HDC guidance, where such metering information is available

Figure 3-1: Part G output – baseline PCC

Installation Type	Unit of measure	Capacity / flowrate (1)	Use factor (2)	Fixed use (l/person/day) (3)	Litres/person/day =[(1)*(2)]+(3) (4)
WC (single flush)	Flush volume (litres)		4.42	0	
WC (dual flush)	Full flush volume (litres)		1.46	0	
	Part flush volume (litres)		2.96	0	
WCs (multiple fittings)	Average effective flushing volume (litres)	4.66	4.42	0	20.5972
Taps (exc kitchen taps)	Flow rate (l/min)	9.00	1.58	1.58	15.8
Bath (where shower also present)	Capacity to overflow (l)	185	0.11	0	20.35
Shower (where bath also present)	Flow rate (l/min)	13.5	4.37	0	58.995
Bath only	Capacity to overflow (l)		0.5	0	
Shower only	Flow rate (l/min)		5.6	0	
Kitchen sink taps	Flow rate (l/min)	8.00	0.44	10.36	13.88
Washing machine	l/kg dry load	4.75	2.1	0	9.975
Dishwasher	l/place setting	0.79	3.6	0	2.844
Waste disposal unit	l/use	0	3.08	0	0
Water softner	l/person/day	0	1	0	0
	(5)	**Total calculated use (l/person/day)** = Σ[column (4)]			**142.44**
	(6)	Contribution from greywater (l/person/day) from Table 4.6			0
	(7)	Contribution from rainwater (l/person/day) from Table 5.5			0
	(8)	Normalisation factor			0.91
	(9)	**Total water consumption (CSH)** = [(5)-(6)-(7)]*(8) (l/person/day)			**129.62**
	(10)	External water use			5
	(11)	**Total water consumption (Part G)** = (9)+(10) (l/person/day)			**134.62**

3.3 Actual occupancy and baseline demand

3.3.1 In reality, due to the recent implementation of the physical works to the outbuilding under permission DC/17/1981, the outbuilding has not been occupied as a separate dwelling (independent of Westons Farmhouse) prior to this change of use application.

3.3.2 To account for this, an occupancy rate of 0 has therefore been applied to the baseline PCC, resulting in baseline water demand of **0 litres/day.**

3.3.3 This is a conservative position for water neutrality, treating the water use by future occupants of the separate dwelling (should the current change of use application be approved) as entirely additional, despite the outbuilding and its water-consuming appliances already existing and already seeing some use by the current occupants of Westons Farmhouse together with its outbuilding.

4 Proposal Demand

4.1 Fittings approach estimation

4.1.1 This section will calculate the anticipated water demand arising from the Proposed Development. As with the baseline calculations, the 'fittings approach' of the Building Regulations Part G Calculator has been used to estimated the anticipated PCC.

4.1.2 As the application this WNS accompanies is for a change in use of the detached domestic outbuilding, rather than a change in physical configuration, the fittings schedule shown in Table 2-1 remains applicable: these fittings are not being replaced or altered due to the change of use application.

4.1.3 The modelled anticipated PCC, derived from the Part G Calculator, is therefore the same as the estimated historical baseline PCC (prior to the actual occupancy adjustment discussed in Section 3.3).

4.1.4 Based on the toilet flush and bath volumes, washing machine and dishwasher water consumption rates, and flow rates for the shower, bathroom and kitchen taps presented in Table 2-1, the Proposed Development is anticipated to have a **PCC of 135 l/p/d**).

Figure 4-1: Part G output – anticipated PCC

Installation Type	Unit of measure	Capacity / flowrate (1)	Use factor (2)	Fixed use (l/person/day) (3)	Litres/person/day =[(1)*(2)]+(3) (4)
WC (single flush)	Flush volume (litres)		4.42	0	
WC (dual flush)	Full flush volume (litres)		1.46	0	
	Part flush volume (litres)		2.96	0	
WCs (multiple fittings)	Average effective flushing volume (litres)	4.66	4.42	0	20.5972
Taps (exc kitchen taps)	Flow rate (l/min)	9.00	1.58	1.58	15.8
Bath (where shower also present)	Capacity to overflow (l)	185	0.11	0	20.35
Shower (where bath also present)	Flow rate (l/min)	13.5	4.37	0	58.995
Bath only	Capacity to overflow (l)		0.5	0	
Shower only	Flow rate (l/min)		5.6	0	
Kitchen sink taps	Flow rate (l/min)	8.00	0.44	10.36	13.88
Washing machine	l/kg dry load	4.75	2.1	0	9.975
Dishwasher	l/place setting	0.79	3.6	0	2.844
Waste disposal unit	l/use	0	3.08	0	0
Water softner	l/person/day	0	1	0	0
	(5)	**Total calculated use (l/person/day)** = Σ[column (4)]			**142.44**
	(6)	Contribution from greywater (l/person/day) from Table 4.6			0
	(7)	Contribution from rainwater (l/person/day) from Table 5.5			0
	(8)	Normalisation factor			0.91
	(9)	**Total water consumption (CSH)** = [(5)-(6)-(7)]*(8) (l/person/day)			**129.62**
	(10)	External water use			5
	(11)	**Total water consumption (Part G)** = (9)+(10) (l/person/day)			**134.62**

4.2 Occupancy and anticipated consumption

4.2.1 As described in Section 2, the Proposed Development is a two-bedroom property. In accordance with HDC's "*Water neutrality and planning applications*" guidance (Horsham District Council, 2023a), the anticipated occupancy rate of the dwelling is 1.88 occupants, based on the extrapolated 2011 census data for Horsham District. This results in a total anticipated water demand for the Proposed Development of **253 litres/day** (134.62 l/p/d * 1.88 people).

4.3 Water neutral?

4.3.1 As mentioned in Section 2, HDC defines water neutrality as:

"Development that takes place which does not increase the rate of water abstraction for drinking water supplies above existing levels."

4.3.2 Water neutrality can therefore be assessed by establishing the difference between existing (baseline) levels and anticipated levels arising from the Proposed Development.

4.3.3 As discussed in Section 3, the baseline water demand for the outbuilding has (conservatively) been taken as **0 litres/day.**

4.3.4 The difference between the baseline and proposed PCC and total consumption is shown in

4.3.5 Table 4-1. The results show that there would be an increase in average water consumption relative to the baseline as a result of the Proposed Development This increase would be of 135 l/p/d, with a total increase of approximately 253 litres/day based on anticipated occupancy. Therefore, the Proposed Development cannot conservatively be determined to be water neutral and offsetting measures are required.

Table 4-1: Determining water neutrality

Consumption Period	Westons Farm Annexe PCC (l/p/d)	Total Consumption (litres/day)
Baseline	0	0
Anticipated	134.62	253.09
Difference	+134.62	+253.09

5 Efficiency and offsetting measures

5.1 Efficiency and offsetting hierarchy

5.1.1 As advised by HDC, reducing water consumption in the Proposed Development through the installation of water efficient fittings and appliances should be considered before offsetting.

5.1.2 The outbuilding has been fitted out in 2023 under implementation of permission DC/17/1981 under the prevailing Building Regulations for that permission, and as such they follow the applicable standards for water efficiency under Part G. There is no further physical alteration to the outbuilding proposed as part of the change of use permission currently sought. Given that the fittings have been newly installed during 2023 prior to occupation of the outbuilding as an independent dwelling, it would not a sustainable decision to remove these and re-retrofit the outbuilding in an effort to achieve any additional water efficiency beyond that already provided.

5.1.3 It is noted that, in line with the Building Regulations requirements, the existing fittings provide dual flush toilets, and a highly water efficient washing machine and dishwasher to achieve for water efficiency.

5.1.4 To further mitigate the increased water consumption effect of new residents occupying the outbuilding as a dwelling independent of Westons Farmhouse, should the change of use application be approved, offsetting is therefore proposed.

5.2 Source of water offset

5.2.1 Christ's Hospital Foundation holds a portfolio of properties across the SNWRZ in which offsetting measures can be implemented. One of these properties is Sluetts Farm, located approximately 2km to the southeast of the Proposed Development.

5.2.2 A planning application at Sluetts Farm was submitted to HDC in 2023 for the *"Erection of temporary agricultural workers dwelling"* [sic], planning reference DC/23/0306. Within this planning application, a large, bespoke rainwater harvesting system (RHS) was proposed to be installed at one of the barns on site. The application was validated on 20 February 2023 and a decision by HDC is pending.

5.2.3 The Water Neutrality Statement written for the planning application at Sluetts Farm shows that the RHS would provide a net reduction in mains water consumption across the site (after taking into account the farm and worker's dwelling) of approximately 2,625 litres per day. The gross capacity provided by the RHS would be 2,827 litres per day[2]. The additional water demand from the workers' dwelling

[2] A copy of the Water Neutrality Statement for Sluetts Farm detailing this and supporting RHS information are enclosed at Appendices A and B, but in brief: the water collected by this RHS at Sluetts Farm was proposed to replace part of the mains-supplied water that has historically been consumed for agricultural purposes. Calculations were provided by the RHS supplier, based upon

proposed at Sluetts Farm is only 203 litres/day. Net of this demand, there is therefore an excess offset by the RHS of 2,625 litres per day – i.e. there would be 2,625 fewer litres of mains-supplied water consumed per day at Sluetts Farm because of the RHS that was proposed as part of the planning application.

5.2.4 This means that there will be significant available capacity in this system to offset other development within the Christ's Hospital Foundation portfolio, as a result of forward planning by Christ's Hospital Foundation to contribute to managing water neutrality in the SNWRZ area.

5.3 Proposed Development water neutrality

5.3.1 The additional water consumption of 253 litres/day due to the proposed development can be offset in full by the RHS to be installed at Sluetts Farm. There is more than sufficient headroom in the capacity created by the anticipated water demand reduction at Sluetts Farm to confidently offset all additional water demand from the Proposed Development; the anticipated 2,625 litre per day reduction in mains water consumption at Sluetts Farm is tenfold greater than the additional demand from the Proposed Development.

5.3.2 Table 5-1 provides an accounting of water offsets to be provided by the Sluetts Farm RHS. There would still be 2,371 litres per day remaining mains-water reduction due to the RHS available as an offset after both the Proposed Development and the development at Sluetts Farm are accounted for.

5.3.3 This provides certainty that the Proposed Development will not increase the rate of water abstraction for drinking water supplies above existing levels in the Sussex North Water Resource Zone. As per HDC's definition of water neutrality, the Proposed Development can therefore be described as "water neutral" if delivered in tandem with the Sluetts Farm development and the RHS at Sluetts Farm is installed.

5.3.4 For the avoidance of doubt, the proposed RHS at Sluetts Farm has not already been implemented and would represent an offset with additionality relative to the water consumption baseline at Sluetts Farm and/or Westons Farm as applicable.

5.3.5 Delivery of the RHS at Sluetts Farm is not dependent on the agricultural worker's dwelling planning permission (application DC/23/0306) being granted, as the RHS could be installed under permitted development rights.

local average rainfall patterns, the barn roof areas, and the assumption that 90% of the water will pass to the storage tanks. This resulted in an estimated total of 1,031,985 litres per year going to storage across the RHS system, an average of 2,827 litres per day.

5.3.6 Correspondence from Natural England dated 19th December 2023, regarding the application of DC/23/0306, stated that there is no objection to the development subject to appropriate mitigation being secured. The recommended mitigation measures is to secure the delivery, management and maintenance of measures identified in the Water Neutrality Statement to achieve water neutrality. In this way, it can be expected that this form of mitigation will also be appropriate at the Proposed Development.

Table 5-1: Reduction in mains water demand across the SNWRZ

Source	Water demand or offset (litres/day)	Net change in mains water demand across the SNWRZ (running total, litres/day)
Installation of the RHS at Sluetts Farm	-2,827.36	-2,827.36
Erection and occupation of the temporary agricultural worker's dwelling at Sluetts Farm	+202.81	-2,624.55
Change in use from ancillary annexe to separate residential outbuilding at Westons Farmhouse Annexe	+253.09	-2,371.46

6 Conclusion

6.1.1 This Water Neutrality Statement has been prepared for the proposed change of use of an outbuilding at Westons Farmhouse, Itchingfield, to an independent dwelling. The statement sets out a conservative baseline of zero existing water consumption, an estimate of additional consumption by future occupiers of the independent dwelling in line with Horsham District Council's guidance, and a proposed source of offsite mains water consumption reduction at another property owned by the applicant to fully offset the additional water use.

6.1.2 The Proposed Development would therefore be water neutral.

6.1.3 The need for a Water Neutrality Statement is in the context of the current delay to the Horsham District Local Plan following the release of Natural England's position statement regarding water abstraction within the Sussex North Water Supply Zone (SNWSZ). The consequence of this has been to delay development which may contribute to wider social, economic and environmental commitments made by Horsham District Council. This change of use application, along with others, is being progressed and provides a water neutrality solution through offsetting to enable much-needed sustainable development to proceed, in the interim until anticipated partnership working between Horsham District Council, Southern Water and Natural England leading to a strategic Water Neutrality Strategy for the area can be developed.

6.1.4 The Proposed Development would increase the potential demand for water abstraction for drinking water supply by 253 litres per day above existing levels in the SNWSZ and would therefore not be considered water neutral prior to offsetting.

6.1.5 The applicant, Christ's Hospital Foundation, has proposed a rainwater harvesting system at its Sluetts Farm property to provide a very substantial mains water demand reduction, which would be available to offset changes in water consumption at Sluetts Farm and at other properties within the Christ's Hospital Foundation portfolio, including the proposed change of use of the outbuilding at Westons Farm.

6.1.6 The rainwater harvesting at Sluetts Farm has a calculated average daily water supply capacity of 2,827 litres, which would replace mains water supply to the farm for agricultural purposes. This means that there would be a 2,827 litre per day reduction in water the rate of water abstraction in the SNWRZ. Net of 203 litres per day of water demand to be offset at Sluetts Farm for an agricultural worker's dwelling, there remains a 2,371 litre per day reduction in the rate of water abstraction in the SNWRZ due to the rainwater harvesting system.

6.1.7 This is more then tenfold the 253 litres per day increase in water demand for the Proposed Development at Westons Farm, and can therefore fully provide the necessary offset capacity to ensure the Proposed Development is water neutral. It is noted that the remaining mains water demand reduction to be achieved by Christ's Hospital Foundation through the rainwater harvesting system would make a positive

contribution to sustainable water management in the SNWSZ area, beyond offsetting the Sluetts Farm and proposed Westons Farm developments.

6.1.8 For the avoidance of doubt, the proposed RHS at Sluetts Farm has not already been implemented and would represent an offset with additionality relative to the water consumption baseline at Sluetts Farm and/or Westons Farm as applicable.

6.1.9 Delivery of the RHS at Sluetts Farm is not dependent on the agricultural worker's dwelling planning permission (application DC/23/0306) being granted, as the RHS could be installed under permitted development rights.

6.1.10 Correspondence from Natural England dated 19th December 2023, regarding the application of DC/23/0306, stated that there is no objection to the development subject to appropriate mitigation being secured. The recommended mitigation measures is to secure the delivery, management and maintenance of measures identified in the Water Neutrality Statement to achieve water neutrality. In this way, it can be expected that this form of mitigation will also be appropriate at the Proposed Development.

6.1.11 Without prejudice to the view that the competent authority for water abstraction licensing is the Environment Agency, the evidence provided in this Water Neutrality Statement provides a firm basis and strong incentive to progress the planning application from a water neutrality perspective.

7 References

Department for Levelling Up, Housing and Communities. (2023). *National PLanning Policy Framework.*

HM Government. (1992). *Council Directive 92/43/EEC.* Retrieved from Legislation.gov.uk: https://www.legislation.gov.uk/eudr/1992/43/contents

HM Government. (2009). *Directive 2009/147/EC of the European Parliament and of the Council.* Retrieved from Legislation.gov.uk: https://www.legislation.gov.uk/eudr/2009/147

HM Government. (2015). *The Building Regulations 2010. Approved Document G: Sanitation, hot water safety and water efficiency.*

HM Government. (2017). *The Conservation of Habitats and Specifes Regulations.* Retrieved from legislation.gov.uk: https://www.legislation.gov.uk/uksi/2017/1012/regulation/63

Horsham District Council. (2015). *Horsham District Planning Framework.* Retrieved from Horsham District Council: https://www.horsham.gov.uk/__data/assets/pdf_file/0016/60190/Horsham-District-Planning-Framework-November-2015.pdf

Horsham District Council. (2023a, June 16). *Water neutrality and planning applications*. Retrieved from Horsham District Council: https://www.horsham.gov.uk/planning/water-neutrality-in-horsham-district/water-neutrality-and-planning-applications

Horsham District Council. (2023b, June 16). *Water neutrality and Planning Policy*. Retrieved from Horsham District Council: https://www.horsham.gov.uk/planning/water-neutrality-in-horsham-district/water-neutrality-and-planning-policy

Jostec. (2021). *Water Efficiency Calculations*. Retrieved from https://jostec.co.uk/services/water-efficiency-calculations/

RSPB. (2023). *Pullborough Brooks*. Retrieved from RSPB: https://www.rspb.org.uk/reserves-and-events/reserves-a-z/pulborough-brooks/

Appendix A

Sluetts Farm Water Neutrality Statement

Water Neutrality Statement

Sluetts Farm: Temporary Workers' Accommodation

Document Control

	Water Neutrality Statement
Version No.	Rev4
Date Approved	2 May 2023
Date 1st Issued	3 May 2023

Version History

Version	Date	Authored by:	Reviewed by:	Approved by:	Description of change
REV0	March 2023	Miles Ryan-Cummings	-	-	Working draft
REV1	March 2023	Miles Ryan Cummings	Tara Barratt	-	Internal review
REV2	March 2023	Miles Ryan Cummings	-	-	Water bills/metre readings added
REV3	March 2023	Miles Ryan-Cummings	Dan Smyth	Dan Smyth	Draft issued to client
REV4	May 2023	Miles Ryan-Cummings	-	Dan Smyth	Calculations updated to give more detail of RHS + updated occupancy rate; units changed to l

Table of Contents

1 Introduction 3
2 Background: Water Neutrality 5
3 Site Description 7
4 Planning Policy 9
5 Water Neutrality Assessment 10
5.2 Historical Water Demand 10
5.3 Anticipated Water Demand 10
5.4 On-site Measures 12
5.5 Water Neutral? 13
6 Commentary and Conclusions 14
7 References 15
Appendix A 16
20/05/2021 Water Bill 16
Water Meter Reading 27/03/2023 18
Appendix B 19
Toilet Specification 19
Kitchen Tap Specification 20
Shower Specification 21
Bathroom Tap Specificaiton 22
Appendix C 23
Rainwater Harvesting System Service Quote 23

List of Tables

Table 1. Detailed water neutrality hierarchy; adapted from (WaterWise, 2021) 6
Table 2. Sluetts Farm water consumption 10
Table 3. Water consumption across the site 12
Table 4. Rainwater harvesting potential capacity 13
Table 5. Determining Water Neutrality 13

List of Figures

Figure 1: Water neutrality hierarchy; adapted from (WaterWise, 2021) 5
Figure 2: Site Location 7
Figure 3: Unit plans of the proposed development 8
Figure 4. Part G Output for proposed dwelling 11

1 Introduction

1.1.1 This Water Neutrality Statement has been prepared to accompany a planning application, submitted to Horsham District Council (HDC) on behalf of the Applicant, Christ's Hospital Foundation (herein "CHF"), for the following development proposal:

"Erection of temporary agricultural workers dwelling."

1.1.2 CHF is a registered charity, whose principal objective is to aid the advancement of education for children, principally for the benefit of those who have social, financial and other specific needs. The assets and endowments of the Foundation are used to support more than 600 bursary places at the school. The ability of the Foundation to meet the financial needs of the school depends critically on funding which derives from the endowment and returns from their investments.

1.1.3 The opportunities provided by the Foundation's land are directly linked to its charitable purposes. The Foundation view the proposed development as an opportunity to provide capital to support the objectives of the charity whilst improving local housing supply.

1.1.4 This report responds to HDC's delegated applications assessment sheet. In particular, it responds to Natural England's objection to the proposed development which is on the basis that it cannot be concluded beyond reasonable scientific doubt that new development in this zone would not have an adverse effect on the integrity of the Arun Valley SAC, SPA and Ramsar sites. The application site falls within the Sussex North Water Supply Zone as defined by Natural England which draws a proportion of its water supply from groundwater abstraction at Hardham.

1.1.5 Groundwater abstraction is licensed by the Environment Agency. In the case of water abstracted at Hardham, this is managed by Southern Water who apply for the right to abstract water in accordance with population forecasts associated with the relevant Local Plan, including windfall development. Such applications are accompanied by the relevant environmental information in order to allow the Environment Agency to consider licensing in light of this. It is understood that groundwater abstraction from Hardham is being reduced in accordance with the Environment Agency's ongoing management requirements.

Pulborough Brooks

1.1.6 Pulborough Brooks Nature Reserve is managed by the RSPB to provide the perfect condition for wildlife (RSPB, 2023). The grasslands are part of the Arun Valley floodplain and are criss-crossed by ditches which are home to some of our rarest creatures and plants. This includes the threatened little ramshorn whirlpool snail.

1.1.7 A combination of controlled flooding, grazing and hay cutting are used to manage the wet grasslands to create a healthy mosaic of grassland habitats.

1.1.8 The ditches which cross the wet grasslands need clearing out to move water around the site. This is done on rotation, to always keep some of the vegetation which lives there and give a home to rare wildlife, including the little ramshorn whirlpool snail.

1.1.9 In 2017 the ditches were the focus of a Heritage Lottery funded project “Back from the Brink” which helped create ideal conditions for the rare ramshorn whirlpool snail and other aquatic species.

2 Background: Water Neutrality

2.1.1 Definitions of water neutrality often vary depending on the context in which it is used. Southern Water provide perhaps the most relevant definition of water neutrality in their Draft Water Resources Management Plan 2024 (DWRMP24) (Southern Water, 2022). It states:

"For every new development, total water use in the region after the development must be equal to or less than the total water use in the region before the new development."

2.1.2 Water neutrality should be achieved over a set period, such as 10 or 20 years, and assessed at various stages of the build (e.g. planning and design, as constructed, and ongoing monitoring once the homes have been built and are occupied). Water efficiency measures may deteriorate over time, so may need ongoing maintenance or replacement in order to maintain water neutrality.

2.1.3 There are three steps to achieving water neutrality as shown in Figure 1:

- reducing water use by making the new build as water efficient as possible;
- installing water reuse systems, such as rainwater harvesting or grey water recycling; and
- offsetting any remaining demand in the existing local region.

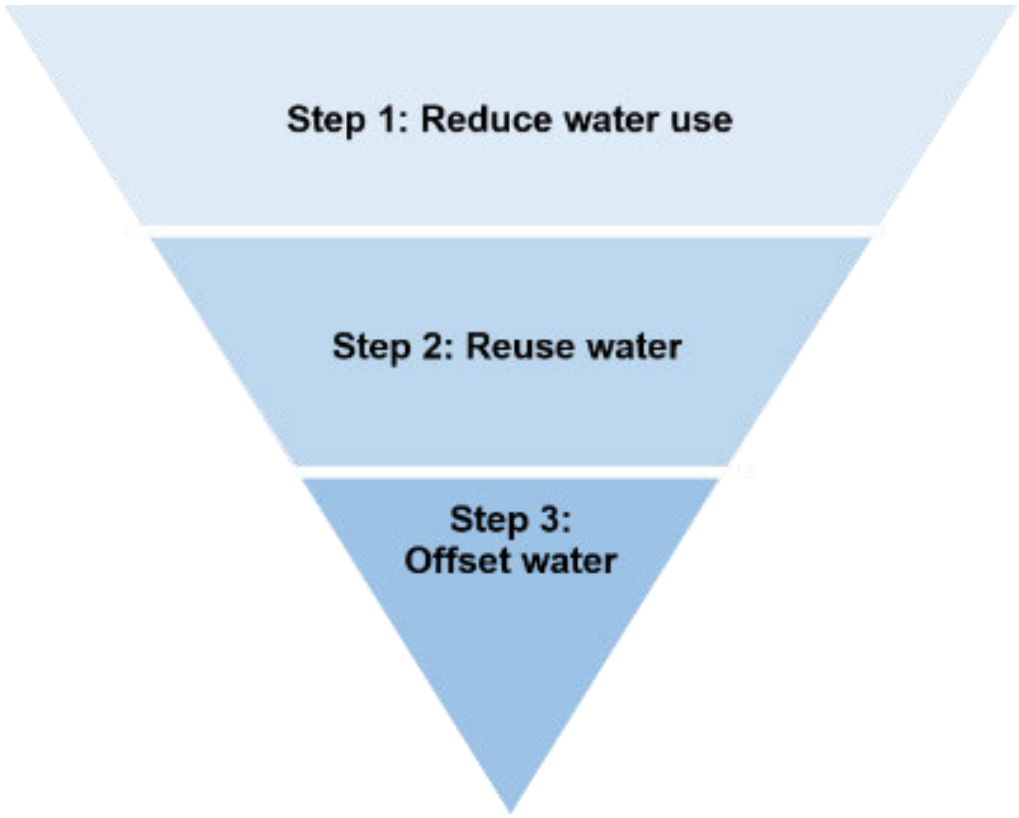

Figure 1: Water neutrality hierarchy; adapted from (WaterWise, 2021)

Table 1. Detailed water neutrality hierarchy; adapted from (WaterWise, 2021)

Step		Description	Example measures
	1. Reduce water use	The first and most important step to achieving water neutrality is to ensure that water is used as efficiently as possible. The smaller the water demand of a building due to its design and fittings the less water is needed to be reused and offset.	- Water efficient devices - Smart metering - Water saving culture
	2. Reuse water	Once water use is reduced to an ambitious level, water reuse should be considered. Water reuse generally refers to the capture, treatment (if required) and use of alternative water supplies for non-potable purposes.	- Rainwater harvesting - Greywater recycling - Blackwater recycling
	3. Offset water	The remaining water which can't be satisfied with non-potable sources needs to be offset. This can be done by investing in schemes that save water in the local region (need to be within the same water resource zone as the new development).	- Funding water efficiency audits and retrofits for existing homes or businesses

3 Site Description

3.1.1 The application site (Sluetts Farm) forms part of the wider Westons Farm holding, as shown in Figure 2. It lies approximately 500 m to the east of the CHF School Campus and is under the jurisdiction of HDC. It also lies within the Southwater Neighbourhood Plan area. The site itself contains a hay barn, dairy building, two cattle sheds and silage clamps. Access is obtained directly onto Two Mile Ash Road.



Figure 2: Site Location

3.1.2 The proposed development is for a single detached dwelling (residential use) with a Gross External Area of 33.45 m^2 (30x12 ft), which would be occupied by agricultural workers for a period of up to 3 years. The dwelling would take the form of the Pemberton Avon 2 berth 30x12 ft (Pemberton Park and Leisure Homes, 2023) comprising 2 bedrooms, a kitchen, living room and bathroom; unit plans of the proposed development are provided in Figure 3.

3.1.3 The proposed development would be positioned on the eastern side of the access track adjacent to the agricultural barns where livestock is housed. Access would be provided to the east of the site via a private track off the existing track between Two Mile Ash Road and Sluetts Farm.

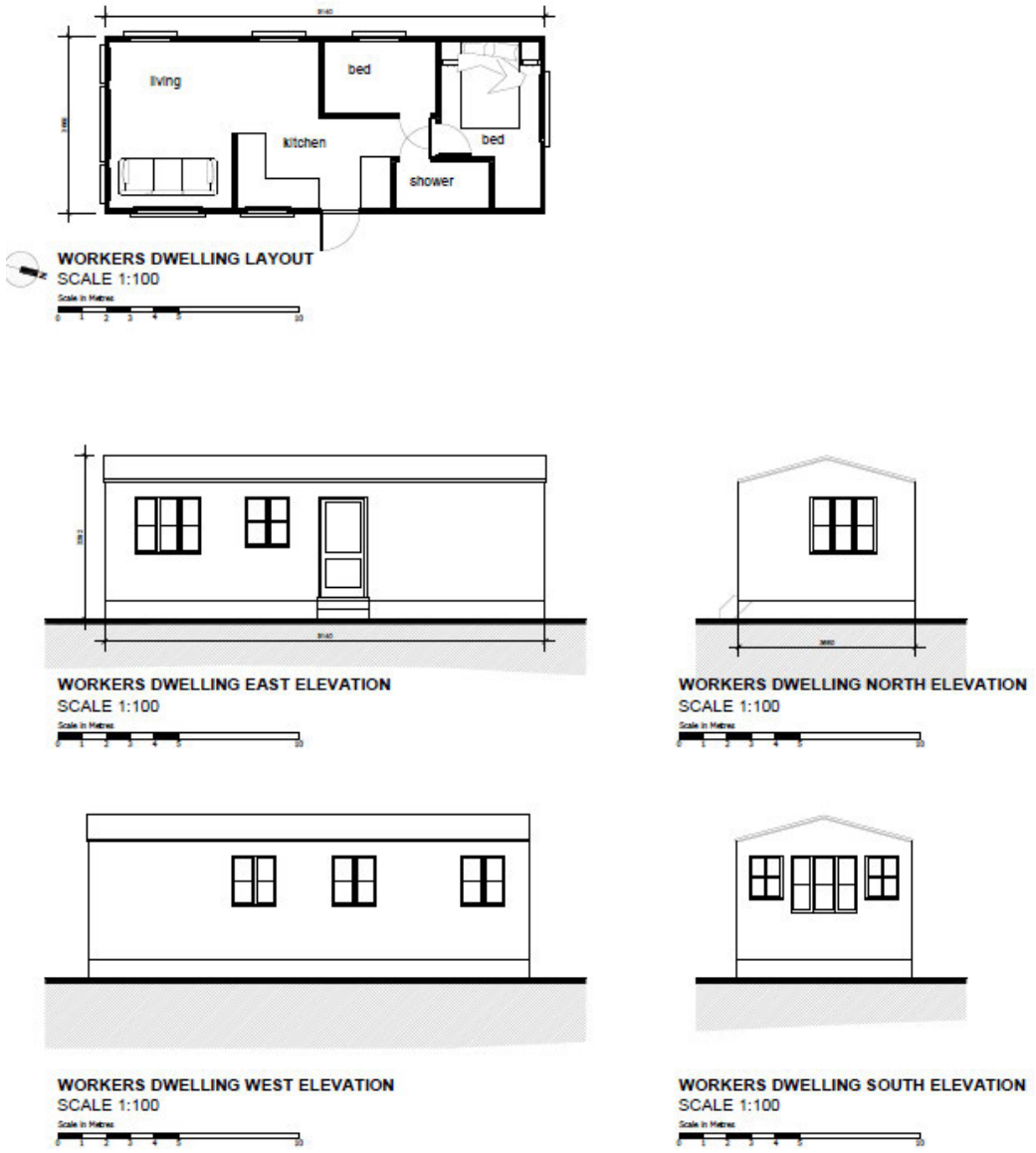

Figure 3: Unit plans of the proposed development

4 Planning Policy

4.1.1 HDC is situated in an area of serious water stress, as identified by the Environment Agency. Natural England issued a position statement (Natural England, 2021) on 14 September 2021 regarding the mitigation of water usage and the need to ensure water neutrality is achieved as part of all new developments across the Sussex North Water Supply Zone (SNWSZ), in which HDC, parts of Chichester District and the Borough of Crawley are located. The position statement outlines that it cannot be concluded that new development in this zone would not have an adverse effect on the integrity of the Arun Valley Special Protection Area/Special Area of Conservation, and Ramsar sites, which could result in the potential threat of extinction of some species.

4.1.2 Under the Conservation of Habitats and Species Regulations 2017 (s.63) (HM Government, 2017), as a competent authority, it is the duty of HDC to consider the impact of development on protected species and habitats. The application site, Sluetts Farm, falls within the SNWSZ which draws part of its water supply from groundwater abstraction at Hardham (near Pulborough).

4.1.3 The Horsham District Planning Framework 2015 (HDPF) (Horsham District Council, 2015) is the overarching planning document for HDC outside the South Downs National Park (SDNP), and replaces the Core Strategy and General Development Control Policies documents which were adopted in 2007. Any new development which does not achieve water neutrality will be considered contrary to Policy 31 of the HDPF which states:

"Although located in the South Downs National Park, applicants will need to be particularly mindful of the impact development within Horsham district could have on Arun Valley Special Protection Area (SPA) and The Mens Special Area for Conservation (SAC). Both these sites are of international importance for nature conservation, and applicants will need to demonstrate that development does not have adverse impacts on either of these sites in accordance with relevant legislation. In the case of Arun Valley, proposals must demonstrate that they will avoid harm to the water quality and water levels on the site."

5 Water Neutrality Assessment

5.1.1 As per Southern Water's definition of water neutrality, it is necessary to calculate the difference between historical and anticipated water consumption at the site. If both values are equal, or if a surplus is generated, then the proposed development will adhere to or contribute positively towards the water neutrality ambitions within the SNWSZ. According to this definition, if anticipated consumption is higher than historical consumption, the difference between the two must be offset within the region.

5.2 Historical Water Demand

5.2.1 Although the proposed development involves the erection of a temporary agricultural workers' dwelling on previously vacant land, as mentioned in Section 3, it forms part of a pre-existing farm holding. Therefore, historical water consumption at Sluetts Farm is used to inform the baseline figure.

5.2.2 Calculated baseline water consumption at Sluetts Farm is shown in Table 2. The figure has been derived from two meter readings (m^3), 22 months apart, which have been provided by the applicant and can be found in Appendix A. On the basis that the bills from Southern Water since May 2021 have all been on estimated readings, this approach is deemed to provide the most accurate understanding of consumption.

Table 2. Sluetts Farm water consumption

Date of meter reading	Consumption (m^3)	Consumption (l)
20/05/2021	29,156.00	29,156,000
27/03/2023	32,714.00	32,714,000
Annual average	**1,888.67**	**1,888,666.67**
Daily average	**5.17**	**5,170.89**

5.3 Anticipated Water Demand

5.3.1 Anticipated water consumption has been calculated through the utilisation of the water efficiency calculator for dwellings, included in Approved Document G (Part G) of the Building Regulations (2015): Sanitation, hot water safety and water efficiency (HM Government, 2015).

5.3.2 A 'Fittings approach' has been introduced to the Part G calculator which calculates total water consumption (litres/person/day) based on flow rates and water consumption of sanitary ware and appliances, multiplied by a government 'use factor', which is based on how often they are likely to be used (Jostec, 2021).

5.3.3 The 'Fittings approach' of the Part G calculator is based on flow rates and water consumption of sanitary ware and appliances. The applicant has advised that the fittings would reflect those available in the Pemberton Avon 2 berth 30x12 ft, i.e. there would be no bath, washing machine or dishwasher (Pemberton Park and Leisure Homes, 2023). As such, these items have been excluded from the Part G calculation.

5.3.4 Details of the water fittings installed within the Pemberton Avon 2 berth 30x12 ft were supplied by Pemberton Park and Leisure Homes (Pemberton Park and Leisure Homes, 2023). Toilet flush volumes, and flow rates for the shower, bathroom and kitchen taps are derived from their respective product specifications. Flows rates are based on the typical end of communication water pressure aimed for by water companies, which is 1 bar (WaterSafe, 2023). Copies of product specifications can be found in Appendix B.

5.3.5 Total water consumption, as per the Part G calculation, is given in litres/person/day. Hence, Part G output was multiplied by the anticipated occupancy rate (number of residents) of the proposed development to calculate the total water use across the site. In this instance, the applicant has advised that there should be one person only living at the proposed development, and so in reality the Part G output is equal to all water consumed within the dwelling per day. However, following the guidance set out by the LPA, an occupancy of 1.88 was applied to the calculations, reflecting average occupancy rates for a two-bedroom dwelling based on extrapolated 2011 census data for Horsham District.

5.3.6 Outputs from the Part G calculator are presented in Figure 4. Average daily water consumption for the farm worker is 107.88 l/p/d, which is below the Southern Water target of 109 l/p/d by 2050.

Installation Type	Unit of measure	Capacity / flowrate (1)	Use factor (2)	Fixed use (l/person/day) (3)	Litres/person/day =[(1)*(2)]+(3) (4)
WC (single flush)	Flush volume (litres)		4.42	0	
WC (dual flush)	Full flush volume (litres)	6	1.46	0	8.76
	Part flush volume (litres)	4	2.96	0	11.84
WCs (multiple fittings)	Average effective flushing volume (litres)		4.42	0	
Taps (exc kitchen taps)	Flow rate (l/min)	8.10	1.58	1.58	14.378
Bath (where shower also present)	Capacity to overflow (l)		0.11	0	
Shower (where bath also present)	Flow rate (l/min)		4.37	0	
Bath only	Capacity to overflow (l)		0.5	0	
Shower only	Flow rate (l/min)	11	5.6	0	61.6
Kitchen sink taps	Flow rate (l/min)	13.90	0.44	10.36	16.476
Washing machine	l/kg dry load	0.00	2.1	0	0
Dishwasher	l/place setting	0.00	3.6	0	0
Waste disposal unit	l/use	0	3.08	0	0
Water softner	l/person/day	0	1	0	0
	(5)	**Total calculated use (l/person/day) = S[column (4)]**			**113.05**
	(6)	Contribution from greywater (l/person/day) from Table 4.6			0
	(7)	Contribution from rainwater (l/person/day) from Table 5.5			0
	(8)	Normalisation factor			0.91
	(9)	**Total water consumption (CSH) = [(5)-(6)-(7)]*(8) (l/person/day)**			**102.88**
	(10)	External water use			5
	(11)	**Total water consumption (Part G) = (9)+(10) (l/person/day)**			**107.88**

Figure 4. Part G Output for proposed dwelling

5.3.7 Application of the average occupancy rates of a two-bedroom dwelling in Horsham would mean that daily water consumption would be 202.81 l/d (107.88 l/p/d x 1.88). This water demand was added to the existing baseline at Sluetts Farm to give anticipated worst-case-scenario water consumption across the site. This allows for comparison with historical water consumption, and therefore enables judgement as to whether the proposed development is water neutral or not.

5.3.8 Table 3 outlines historical and anticipated water demand at the site. If it is assumed that the farm worker was not previously living in the SNWSZ or using water on the site, and that the dwelling is inhabited at the area average occupancy as opposed to the 1 employee anticipated by the applicant, total annual water consumption across the site would increase by 74,025.65 l. As this figure is greater than the historical baseline, further measures would be required to ensure water neutrality is achieved.

Table 3. Water consumption across the site

	Average Daily Consumption (l/d)	Average Annual Consumption (l/year)
Historical	5170.89	1,888,666.67
Anticipated	5373.70	1,962,692.32
Additional Demand	+202.81	+74,025.65

5.4 On-site Measures

5.4.1 In this case, the applicant proposes the installation of a bespoke Rainwater Harvesting System (RHS) to one of the barns on site. In the past, the vast majority of metered water consumption at Sluetts Farm has been used for agricultural purposes, with a negligible volume (<1%) used for hand washing and occasional kettle boiling; the rainwater collected by the RHS would replace a significant portion of this demand. The applicant has confirmed that *"Water supply pipes would be separated to only deliver rainwater to calf and cattle rearing units (animal drinking and wash down hoses)"*, which means that the harvested rainwater would not be for human consumption, and hence does not require treatment prior to use.

5.4.2 HDC advise that they *"will require details of the rainwater harvesting including the quantum of water capable of being harvested from the site and the means and capacity for storage to cater for drought."*, which equates to *"35 days"* (Horsham District Council, 2022). Although the harvested water is not for human consumption, drought capacity calculations have been conducted using the volume of additional water consumed by the proposed development (202.81 l/d) as this is figure represents the volume of water required to be offset by the RHS.

5.4.3 During a 35 day drought, additional water demand across the site due to the proposed development would equate to 7,098.35 l (35 x 202.81 l/d). The total capacity of the system at any given time is 88,000 l (4 x 22,000 l tanks), meaning that there is capacity to offset the additional demand caused by the proposed development during a period of drought.

5.4.4 During email correspondence on the 26/04/2023, the case officer from HDC also advised that there is a need *"to include a commitment to filling the rainwater tanks from outside of the water resource region prior to occupation of the dwelling with at least the 35 days capacity so that the system does not start at zero."* While the applicant would prefer to fill the system with rainwater harvested at the site, which is considered more sustainable, if this is not achieved prior to occupation, the applicant will commit to filling the rainwater tanks with the balance of 7,098.35 l from outside of the water resource region prior to occupation of the dwelling, if this is considered necessary, bearing in mind that no additional employment is proposed at the site and the employee is an existing consumer of water.

5.4.5 The annual offsetting capacity of the RHS has been calculated with consideration to average rainfall local patterns and barn roof area, and assumes that 90% of water will be going to the tanks. Further details of the system can be found in the service quote from the supplier, JRH Water Management (JRH Water Management, 2023), attached in Appendix C.

Table 4. Rainwater harvesting potential capacity

RHS Component	Annual Capacity (l/year)	Daily Capacity (l/d)
Valley and side system	774,180.00	2,121.04
Side system	257,805.00	706.31
Total	**1,031,985.00**	**2,827.36**

5.5 Water Neutral?

5.5.1 The difference between historical and anticipated water consumption trends is shown in Table 5. The results show that through the implementation of the RHS, there would be a decrease in average water consumption relative to no development at all. Not only does this qualify the proposed development as water neutral, but this impressive 51% reduction across the Sluetts Farm site would occur despite the erection of a new dwelling, which is a testament to the effectiveness of using water efficient water management systems such as RHS.

Table 5. Determining Water Neutrality

	Average Annual Mains Consumption (l)	Average Daily Mains Consumption (l)
Historical	**1,888,666.67**	5,174.43
Anticipated with RHS	930,707.32	2,549.88
Difference	-957,959.35	-2,624.55

6 Commentary and Conclusions

6.1.1 Noting that no additional employment is proposed at Sluett's Farm, and so, arguably, this development is inherently water neutral, this statement has been prepared in the light of the current delay to the Horsham District Local Plan following the release of Natural England's position statement regarding water abstraction within the SNWSZ. The consequence of this has been to delay development which may contribute to wider social, economic and environmental commitments made by HDC. This application, along with others, is being progressed anticipating the partnership work between HDC, Southern Water and Natural England being further progressed so a Water Neutrality Strategy for the area can be developed.

6.1.2 The Water Neutrality Strategy for the area will likely be in conjunction with the goals set out in Southern Water's next Water Resource Management Plan (WRMP24), which is currently available in draft form. The Draft WRMP24 seeks to reduce water stress in the supply zone by reducing leakage by 50%, and to achieve Per Capita Consumption (PCC) targets of 109 l/p/d by 2050, building on the substantial reductions in water supply achieved by Southern Water since privatisation, from over 725 Ml/day in 1989/1990 to less than 550 Ml/day in 2017/2018. The Part G output shows that the new, temporary agricultural workers dwelling would have a PCC of 1,07.9 l/p/d, which is in line with the targets in the Draft WRMP24.

6.1.3 As well as this, the calculated change in mains water consumption across the site presented in Table 5 illustrates how the proposed development would result in a reduction in overall metered water demand. The installation of a rainwater harvesting system would replace 1,031,985 l of existing mains water supply per year that is currently used for agricultural purposes. As such, the proposed development would provide a water surplus over existing modelled consumption of over +957,959 l per year, and thereby strongly supports HDC's Water Neutrality policy and aspirations. It also has the potential to provide offset opportunities for other development.

6.1.4 There would be no need for any off-site offsetting and the development would provide a small but significant positive contribution to the local water budget.

6.1.5 Without prejudice to the view that the competent authority for water abstraction licensing is the Environment Agency, the evidence provided in this statement provides a firm basis and strong incentive to progress the planning application from a water neutrality perspective.

7 References

HM Government. (2015). *The Building Regulations 2010. Approved Document G: Sanitation, hot water safety and water efficiency.*

HM Government. (2017). *The Conservation of Habitats and Specifes Regulations.* Retrieved from legislation.gov.uk: https://www.legislation.gov.uk/uksi/2017/1012/regulation/63

Horsham District Council. (2015). *Horsham District Planning Framework.* Retrieved from Horsham District Council: https://www.horsham.gov.uk/__data/assets/pdf_file/0016/60190/Horsham-District-Planning-Framework-November-2015.pdf

Horsham District Council. (2022, August 19). *Water neutrality and planning applications*. Retrieved from Horsham District Council: https://www.horsham.gov.uk/planning/water-neutrality-in-horsham-district/water-neutrality-and-planning-applications

Jostec. (2021). *Water Efficiency Calculations*. Retrieved from https://jostec.co.uk/services/water-efficiency-calculations/

JRH Water Management. (2023). *JRH Water Management*. Retrieved from JRH Water Management: https://jrhwatermanagement.co.uk/

Natural England. (2021). *Water neutrality: Position statement and response.* Retrieved from Horsham District Council: https://www.horsham.gov.uk/__data/assets/pdf_file/0019/106552/Natural-Englands-Position-Statement-for-Applications-within-the-Sussex-North-Water-Supply-Zone-September-2021.pdf

Pemberton Park and Leisure Homes. (2023). *2023 Avon 30 x 12 2 bedrooms.* Retrieved from Pemberton Park and Leisure Homes.

RSPB. (2023). *Pullborough Brooks*. Retrieved from RSPB: https://www.rspb.org.uk/reserves-and-events/reserves-a-z/pulborough-brooks/

Southern Water. (2022). *Draft Water Resources Management Plan 2024.*

WaterSafe. (2023). *What is the minimum water pressure that a water supplier must supply?* Retrieved from WaterSafe: https://www.watersafe.org.uk/advice/common_plumbing_questions1/pressure/what_is_the_minimum_water_pressure_that_a_water_supplier_must_supply/

WaterWise. (2021). *Water Neutrality Practical Guidance*. Retrieved from WaterWise: https://database.waterwise.org.uk/knowledge-base/water-neutrality-practical-guidance-2021/

Appendix A

Water Bill - 20/05/2021

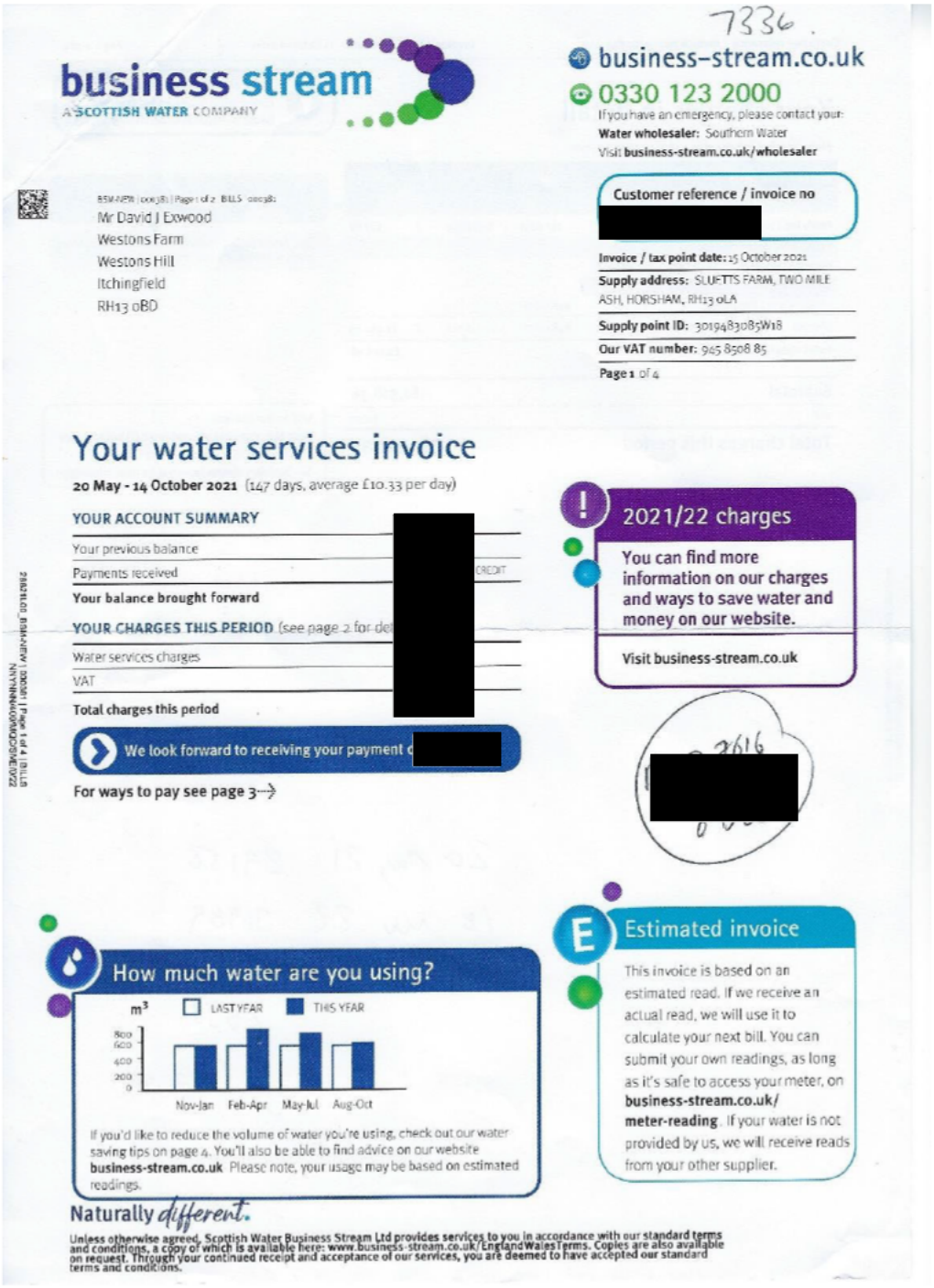

business stream
A SCOTTISH WATER COMPANY

7336.

business-stream.co.uk
0330 123 2000
If you have an emergency, please contact your:
Water wholesaler: Southern Water
Visit **business-stream.co.uk/wholesaler**

Mr David J Exwood
Westons Farm
Westons Hill
Itchingfield
RH13 0BD

Customer reference / invoice no [redacted]

Invoice / tax point date: 15 October 2021
Supply address: SLUFTTS FARM, TWO MILE ASH, HORSHAM, RH13 0LA
Supply point ID: 3019483085W18
Our VAT number: 945 8508 85
Page 1 of 4

Your water services invoice

20 May - 14 October 2021 (147 days, average £10.33 per day)

YOUR ACCOUNT SUMMARY

Your previous balance [redacted]
Payments received CREDIT
Your balance brought forward

YOUR CHARGES THIS PERIOD (see page 2 for de

Water services charges
VAT
Total charges this period

We look forward to receiving your payment [redacted]

For ways to pay see page 3→

2021/22 charges

You can find more information on our charges and ways to save water and money on our website.

Visit business-stream.co.uk

2616 [redacted]

How much water are you using?

If you'd like to reduce the volume of water you're using, check out our water saving tips on page 4. You'll also be able to find advice on our website **business-stream.co.uk**. Please note, your usage may be based on estimated readings.

Estimated invoice

This invoice is based on an estimated read. If we receive an actual read, we will use it to calculate your next bill. You can submit your own readings, as long as it's safe to access your meter, on **business-stream.co.uk/meter-reading**. If your water is not provided by us, we will receive reads from your other supplier.

Naturally *different.*

Unless otherwise agreed, Scottish Water Business Stream Ltd provides services to you in accordance with our standard terms and conditions, a copy of which is available here: www.business-stream.co.uk/EnglandWalesTerms. Copies are also available on request. Through your continued receipt and acceptance of our services, you are deemed to have accepted our standard terms and conditions.

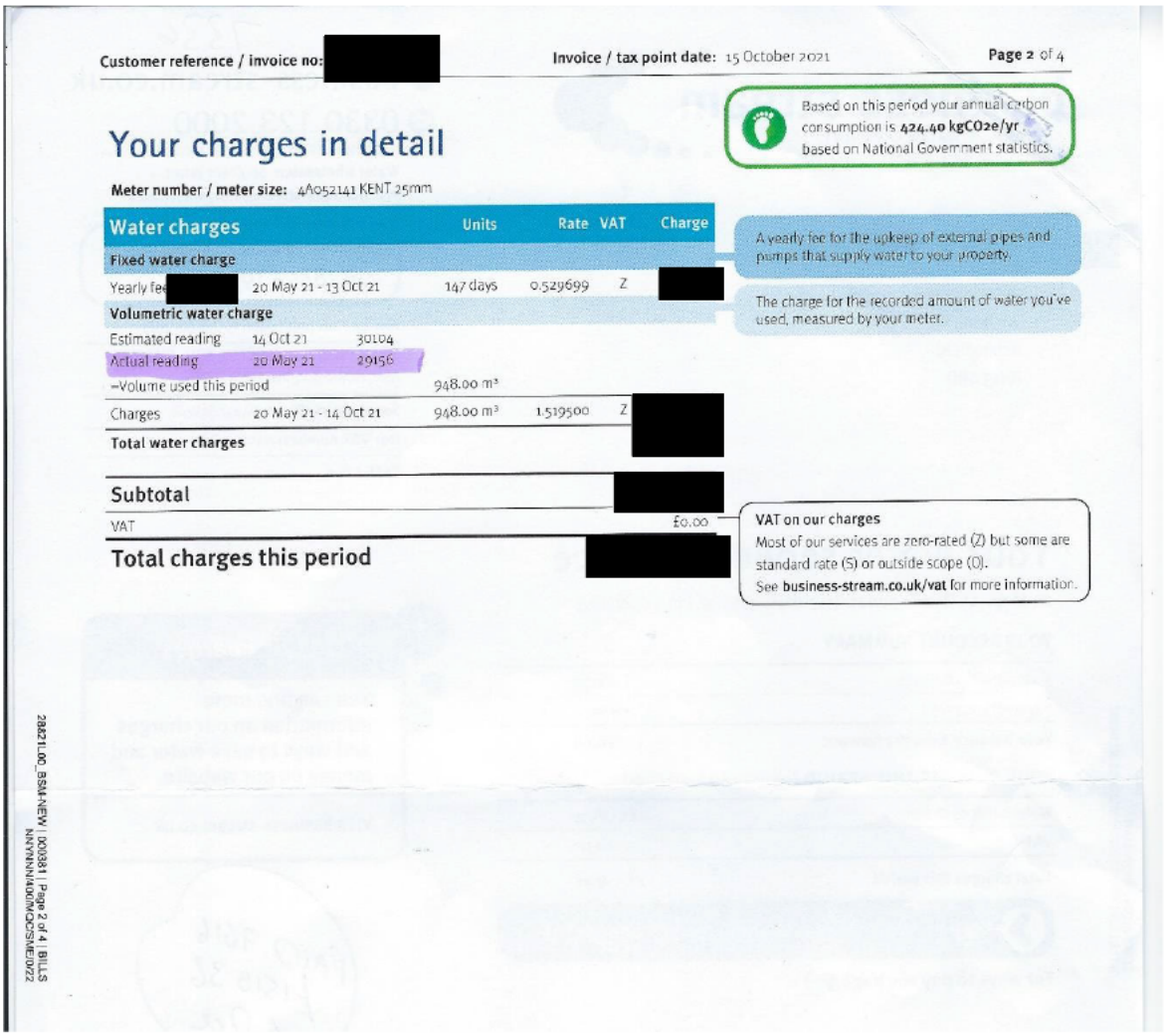

Customer reference / invoice no: [redacted]

Invoice / tax point date: 15 October 2021

Page 2 of 4

Based on this period your annual carbon consumption is **424.40 kgCO2e/yr** based on National Government statistics.

Your charges in detail

Meter number / meter size: 4A052141 KENT 25mm

Water charges			Units	Rate	VAT	Charge
Fixed water charge						
Yearly fee [redacted]	20 May 21 - 13 Oct 21		147 days	0.529699	Z	[redacted]
Volumetric water charge						
Estimated reading	14 Oct 21	30104				
Actual reading	20 May 21	29156				
–Volume used this period			948.00 m³			
Charges	20 May 21 - 14 Oct 21		948.00 m³	1.519500	Z	[redacted]
Total water charges						

A yearly fee for the upkeep of external pipes and pumps that supply water to your property.

The charge for the recorded amount of water you've used, measured by your meter.

Subtotal	[redacted]
VAT	£0.00
Total charges this period	[redacted]

VAT on our charges
Most of our services are zero-rated (Z) but some are standard rate (S) or outside scope (O).
See **business-stream.co.uk/vat** for more information.

28821L00_BSM-NEW | 000381 | Page 2 of 4 | BILLS
NNYNNN/400/MQCSME/0/22

Water Meter Reading - 27/03/2023

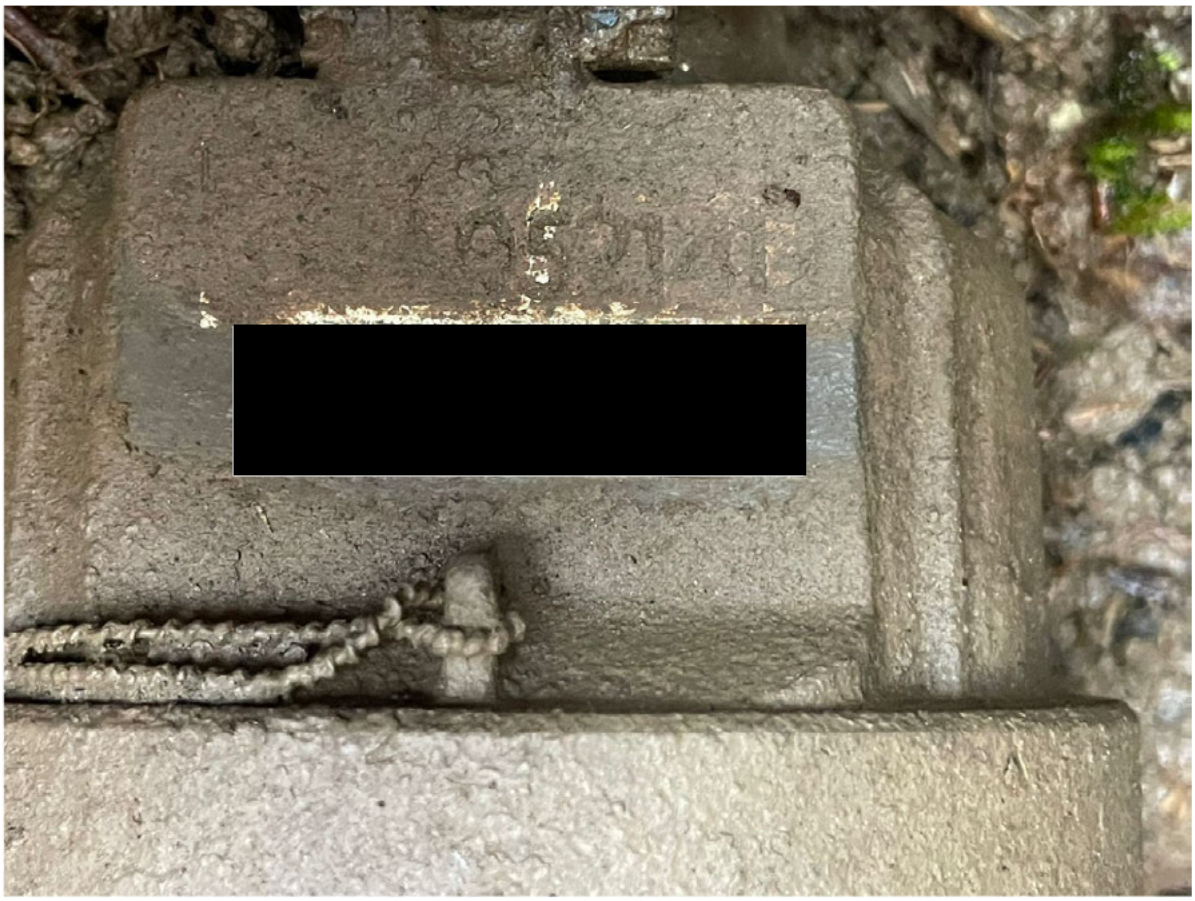

Appendix B

Toilet Specification

Atlas Trade

AT

SAKKARA CLOSE COUPLED PB CISTERN WITH FITTINGS



Product Code	SK2WHPCI
Weight (Kg)	14.2
Material	Vitreous china
Flushing Volume (L)	6/4
Flushing Mechanism	Dual Flush Flush Button
Inlet	RH Bottom Inlet
Cistern fittings included	Yes
Pre-Installed/Bagged	Pre-installed

Key features:

- UKCA compliant
- Smooth modern design
- Water saving option

Description:
A close coupled cistern with smooth lines, it's a family friendly easy clean cistern featuring dual flush push button operation. This cistern is designed to work on either 6/4 ltrs or 4/2.6 ltrs to aid in water saving.

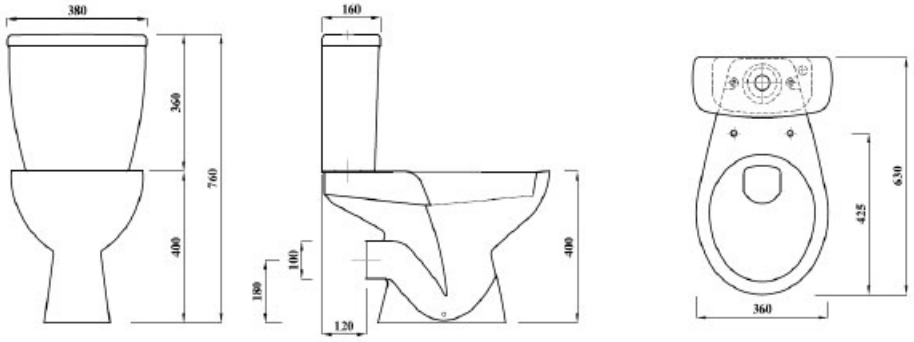

All dimensions are approximate and subject to normal ceramic variation. Although every effort is made not to change the above product specification, Lecico reserve the right to do so without prior notification if necessary. Lifetime ceramic guarantee against manufacturers defects. Full information on guarantees available upon request.

Lecico bathrooms

Kitchen Tap Specification

PEGLERFLOW

4J4011 – MONO SINK MIXER

Francis Pegler BY COMAP



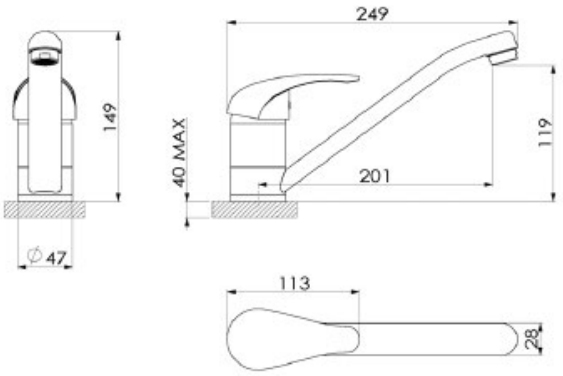

Specification	
Finish	Chrome
Body	Brass
Fittings	Metal plate, washer, stud & locking nut
Connection	M10 – DN8 flexible hoses with ½" BSP threaded ends
Min dynamic pressure	0.1
Max dynamic pressure	6
Max static pressure	16
Max water temperature	60°C

Flow rates				
Pressure	0.1	0.5	1	3
L/min	2.3	9.4	13.9	25.4

All Pressures are in Bar.

Dimensions supplied are nominal and subject to tolerance.

Inclusion of aerator (if supplied) or restrictors (sold separately unless stated) will affect flow rate result.

Performance details are based on trials under test conditions and for guidance only.

The Company reserves the right to change product specification without prior notice.

Features & Benefits

- 10 YEAR Guarantee
- L Low Pressure
- Flexible Hose
- Flow Straightener
- Flow Aerator
- Single Flow

Certifications

WRAS APPROVED PRODUCT	5.2 l/min
1804346 - April 23	*Tested at 0.2 bar*

COMAP UK Ltd. Unit C6, William Way, Moss Ind Est, St Helens Rd, Leigh. Lancashire. WN7 3PT
www.comaptaps.co.uk

aalberts

4J4011-PDS-V1

Shower Specification

SAGITTARIUS

TAPS & SHOWERING

Construction	Brass Body (CuZn38Pb1.8)
Finishes	Chrome plated to BS EN 248
Product Type	Contemporary
Water Pressure	Min. 0.5 bar, Max. 6.0 bar
Plumbing Systems	Suitable for all plumbing systems, preferably balanced.Min. supply pressure differential requirement is 5:1
Standards	Complies with BSEN 1111
Certification	Manufactured to comply with WRAS, TMV2
Cartridge	Thermostatic: Ceramic disc cartridge
Fitting	G1/2" BSP TAILS
Check valve	0.5-10 gpm
Packaging	38 x 22 x 29cm / carton (10 boxes / carton)
Guarantee	10 years against manufacturing faults. (excluding serviceable parts).
Additional Information	1.Temperature: Pre-set 38°C, with push button override to 48°C. 2.Automatic shut off in the event of hot or cold water supply failure.

MILAN VERTICAL EXPOSED SHOWER VALVE CHROME SH/163/C



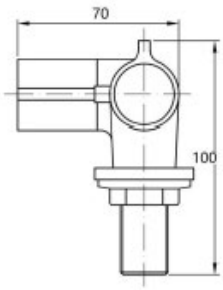

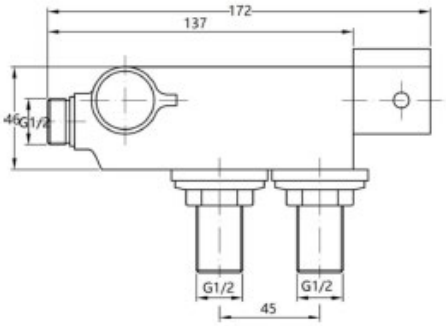

Flow Rates (Litres per minute)

System Pressure	0.1 Bar	0.2 Bar	0.3 Bar	0.5 Bar	1.0 Bar	1.5 Bar	2.0 Bar	3.0 Bar	4.0 Bar	5.0 Bar
SH/163/C	4.0	6.5		9.5	11.0	13.3	15.1	16.9		

The information contained on this page was correct at the date of issue. Fitting dimensions are provided as a guide only. Some variation may occur due to manufacturing tolerances. We pursue a policy of continuing improvement in design and performance of our products and so reserve the right to change specifications without prior notice

FOR FURTHER ADVICE PLEASE CONTACT :-
SAGITTARIUS LTD UNIT 1 LOWER VICTORIA STREET—CHADDERTON—OLDHAM—OL9 9TU TEL:0616 6202029
EMAIL:TECHNICAL@SAGITTARIUSTAPS.CO.UK

Bathroom Tap Specificaiton

TAPWARE

ETHOS

Ethos Mini Mono Basin Mixer

Product Code: ETH313

Finish: Chrome

Deva by METHVEN

Features

Construction:	Brass
Valve/Cartridge type:	Ceramic Cartridge
Supply:	Suitable for all plumbing systems
Working Pressures:	0.3 - 5.0 bar
Inlet connections:	½" BSP
Flexi or Copper:	Flexi Tails

- Ceramic Cartridge for smooth operation
- Tilt and turn temperature and flow control
- In full colour packaging

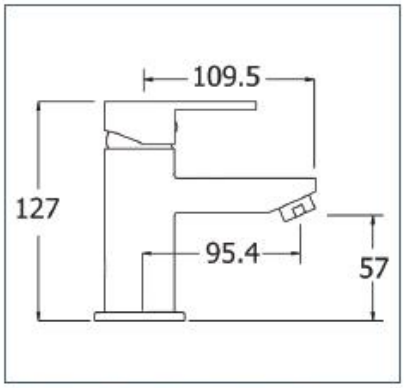



*Please refer to website for full warranty details.

Flow (Bar - l/min, open outlet)

Spout

Flow 0.1	Flow 0.3	Flow 0.5	Flow 1.0	Flow 2.0	Flow 3.0	Flow 4.0	Flow 5.0
2.8	4.7	5.9	8.1	11.3	14.1	16.1	18

kiwa 1912722

WRAS 1912307

12 YEAR GUARANTEE ON ALL DEVA CHROME TAPS *TERMS APPLY

www.deva-uk.com · 0800 195 1602 · sales@uk.methven.com

THE INFORMATION ON THIS SPECIFICATION DOCUMENT WAS CORRECT AT THE DATE OF ISSUE. SOME VARIATION MAY OCCUR DUE TO THE MANUFACTURING TOLERANCES AND SITE SPECIFIC CONDITIONS.

Appendix C

Rainwater Harvesting System Service Quote

JRH water management

Home Close
East Firsby
Market Rasen
Lincolnshire
LN8 2DB

Date:13/01/2021

To

Christ's Hospital
The Counting House
Christs Hospital
Horsham
West Sussex
RH13 0TL
Site - Westons Barn Farm
RH13 0BD
Francis Pulvermacher
07741 263031
fp@christs-hospital.org.uk

Salesperson	Job	Payment Terms	Due Date
MICHAEL JORDEN	Rainwater Harvesting System – Estimate	[redacted]	

Qty	Description	Unit Price	Line Total
Overview	To supply and install RWH system to sites – based on information provided - • RWH system to be installed to barn – taking total roof area • Splitting roof into two system – 1 x side for one system, valley and other side second system • Overflows – to 1 x drain back right corner – assuming 6" drain? • Tanks sited as per picture at bottom of estimate • Due to front valley outlet not being able to be taken across due to doors based on this outlet being blocked to make water run to back outlet • All based on pipework for both systems being installed to timber boarding on siding of shed		
RWH SYSTEM	Valley and side system Roof – 1012m2 roof size with average rainfall per year of 850mm with the filters working at 90% of water going to tanks gives – 774,180L per year going to store average per system 25mm of rainfall on the roof will collect to tanks – 22,700L • 3 x 22,000L NP tank with 2" outlets and fxf taps • 2 x tank link kits • 1 x Wall mounted filter set with mount brackets • 160mm & 110mm pipe, fittings & clips in black • 6x2 treated timber for filter frame supports • 1 x Mechanical tank water level gauge • Labour for x2 to install inc all screws, glues etc to complete works Side system Roof – 337m2 roof size with average rainfall per year of 850mm with the filters working at 90% of water going to tanks gives – 257,805L per year going to store average per system 25mm of rainfall on the roof will collect to tanks – 7582L	[redacted]	[redacted]

	• 1 x 22,000L NP tank with 2" outlets and fxf taps • 1 x Wall mounted filter set with mount brackets • 110mm pipe, fittings & clips in black • 6x2 treated timber for filter frame supports • 1 x Mechanical tank water level gauge • Labour for x2 to install inc all screws, glues etc to complete works		
PLEASE NOTE	• Recommended - Base of 4m x 12m for tanks x 3 and 4m x 4m for 1 x tank • Full access inside and outside of shed for duration of works • Tanks will need to be offloaded and put in location – telehandler needed with driver at all locations • Rubbish removal by customer		
		Subtotal	[redacted]
		VAT 20%	[redacted]
		Total	[redacted]

TERMS:
ALL PRICING IS VALID FOR 30 DAYS FROM DATE OF QUOTATION
JRH RESERVE THE RIGHT TO AMEND PRICES SHOULD SUBSEQUENT INFORMATION BE AT VARIANCE TO THE SPECIFICATION RECIEVED
PAYMENT TERMS AS PER ABOVE AND FINAL PAYMENT DUE WITHIN 48HRS OF JOB COMPLETION
JRH DO NOT GUARANTEE THE QUALITY OF THE EXISTING PIPE WORK AND CANNOT BE HELD RESPONSIBLE FOR ANY LEAKS CAUSED THROUGH DEFECTS IN THIS PIPE WORK
ALL MATERIALS REMAIN THE PROPERTY OF JRH WATER MANAGEMENT UNTIL FULL PAYMENT IS RECEIVED

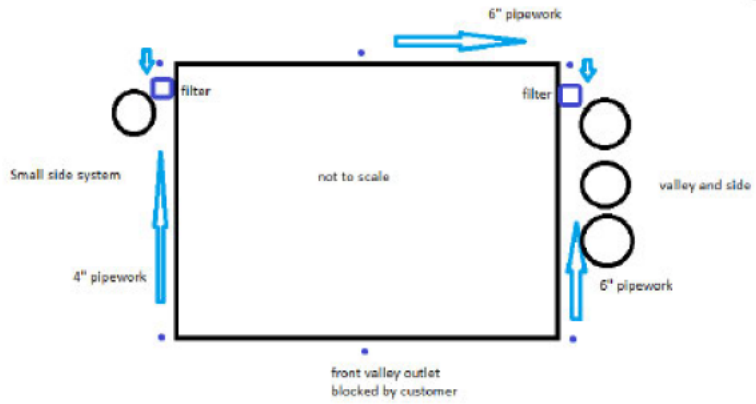

Appendix B
Service Quote Christs Hospital

Date:13/01/2021

Home Close
East Firsby
Market Rasen
Lincolnshire
LN8 2DB

To

Christ's Hospital
The Counting House
Christs Hospital
Horsham
West Sussex
RH13 0TL
Site - Westons Barn Farm
RH13 0BD
Francis Pulvermacher
07741 263031
ftp@christs-hospital.org.uk

Salesperson	Job	Payment Terms	Due Date
MICHAEL JORDEN	Rainwater Harvesting System – Estimate		

Qty	Description	Unit Price	Line Total
Overview	To supply and install RWH system to sites – based on information provided - • RWH system to be installed to barn – taking total roof area • Splitting roof into two system – 1 x side for one system, valley and other side second system • Overflows – to 1 x drain back right corner – assuming 6" drain? • Tanks sited as per picture at bottom of estimate • Due to front valley outlet not being able to be taken across due to doors based on this outlet being blocked to make water run to back outlet • All based on pipework for both systems being installed to timber boarding on siding of shed		
RWH SYSTEM	<u>Valley and side system</u> Roof – 1012m2 roof size with average rainfall per year of 850mm with the filters working at 90% of water going to tanks gives – 774,180L per year going to store average per system 25mm of rainfall on the roof will collect to tanks – 22,700L • 3 x 22,000L NP tank with 2" outlets and fxf taps • 2 x tank link kits • 1 x Wall mounted filter set with mount brackets • 160mm & 110mm pipe, fittings & clips in black • 6x2 treated timber for filter frame supports • 1 x Mechanical tank water level gauge • Labour for x2 to install inc all screws, glues etc to complete works <u>Side system</u> Roof – 337m2 roof size with average rainfall per year of 850mm with the filters working at 90% of water going to tanks gives – 257,805L per year going to store average per system 25mm of rainfall on the roof will collect to tanks – 7582L		

	• 1 x 22,000L NP tank with 2" outlets and fxf taps • 1 x Wall mounted filter set with mount brackets • 110mm pipe, fittings & clips in black • 6x2 treated timber for filter frame supports • 1 x Mechanical tank water level gauge • Labour for x2 to install inc all screws, glues etc to complete works		
PLEASE NOTE	• Recommended - Base of 4m x 12m for tanks x 3 and 4m x 4m for 1 x tank • Full access inside and outside of shed for duration of works • Tanks will need to be offloaded and put in location – telehandler needed with driver at all locations • Rubbish removal by customer		
		Subtotal	
		VAT 20%	
		Total	

TERMS:
ALL PRICING IS VALID FOR 30 DAYS FROM DATE OF QUOTATION
JRH RESERVE THE RIGHT TO AMEND PRICES SHOULD SUBSEQUENT INFORMATION BE AT VARIANCE TO THE SPECIFICATION RECIEVED
PAYMENT TERMS AS PER ABOVE AND FINAL PAYMENT DUE WITHIN 48HRS OF JOB COMPLETION
JRH DO NOT GUARANTEE THE QUALITY OF THE EXISTING PIPE WORK AND CANNOT BE HELD RESPONSIBLE FOR ANY LEAKS CAUSED THROUGH DEFECTS IN THIS PIPE WORK
ALL MATERIALS REMAIN THE PROPERTY OF JRH WATER MANAGEMENT UNTIL FULL PAYMENT IS RECEIVED

