Consulting Civil Engineers

Water Neutrality Report

Thistledown Cottage, West Chiltington

For

Anthony Grocott

Rev – **P3**

Reference **C3114**

Date **12th September 2024**

Revision	Date of Issue	Comments	Prepared By	Checked By
P-	15.04.2024	Initial Issue	LT	CS
P1	23.04.2024	Updated to reference the existing fittings survey	LT	CS
P2	05.09.2024	Proposed dwellings updated	LH	CS
P3	12.09.2024	Revised to suit comments	LH	CS

Richard Cobden House, Lion Street, Chichester, West Sussex, PO19 1LW
Tel: 01243 933253 E: mail@cgscivils.co.uk **W:** www.cgscivils.co.uk

1 Introduction

1.1.1 CGS Civils Ltd has been appointed by Anthony Grocott to undertake a Water Neutrality Report for a proposed development at Thistledown Cottage, Harbolets Road, West Chiltington, West Sussex. Planning permission is sought for the change of use of an existing agricultural building into two 3-bedroom dwellings.

1.1.2 The site falls within the Sussex North Water Supply Zone, in which Natural England have written to all authorities within the zone providing a position statement for applications which may place increased pressure on this zone. This explains that recent case law has established that abstraction from the Supply Zone may be having an impact on protected sites (Arun Valley Special Area of Conservations (SAC), Special Protection Area (SPA) and Ramsar site).

1.1.3 As a result, developments within this zone must not add to this impact, as such, the purpose of this report is to therefore provide an overview on the potential water usage changes on the site as a result of the proposed development, and to confirm that the site is water neutral.

Fig 1. Sussex North Water Supply Zone Area

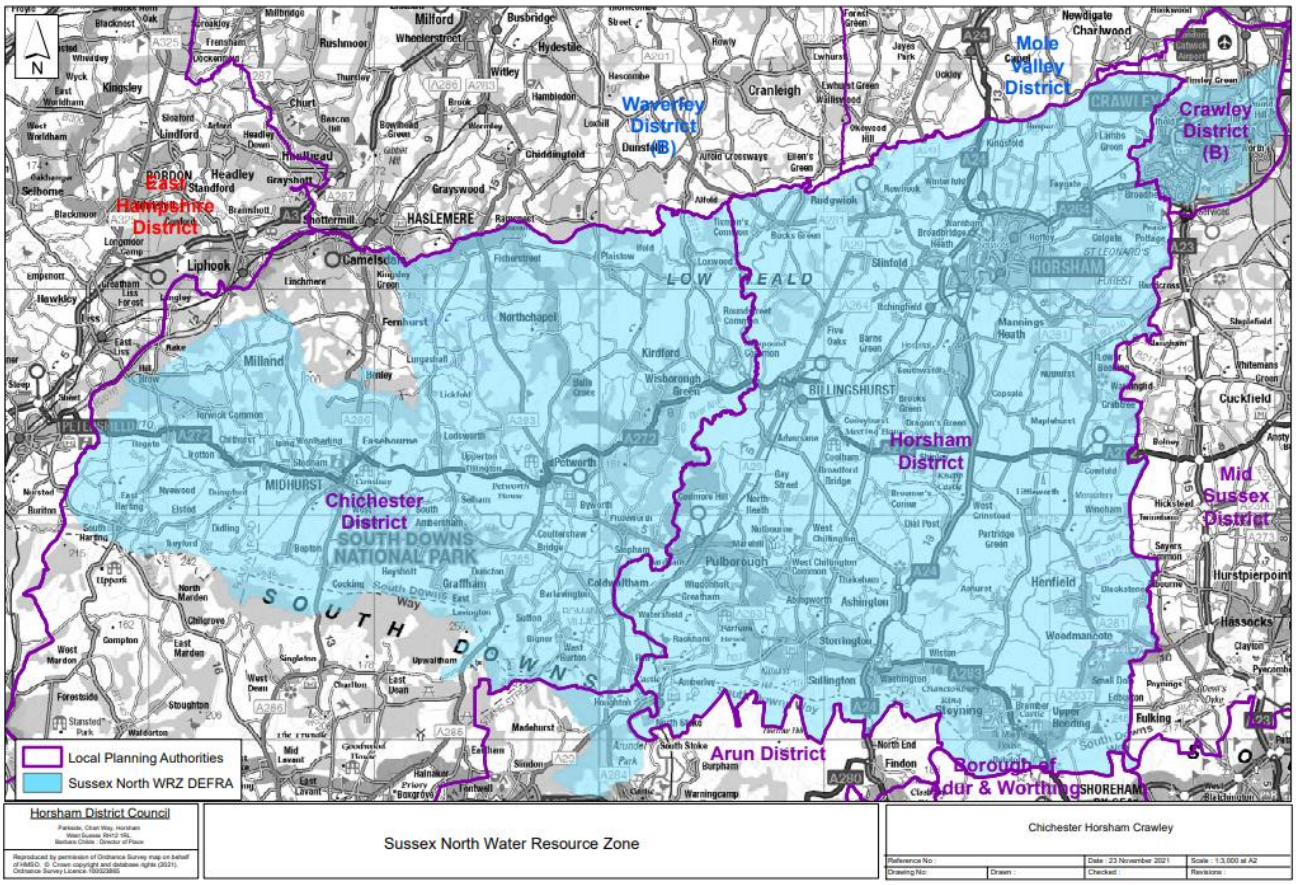

Fig 2. Site Location



1.1.4 The proposed development is located at OS Grid Reference TQ 10018 20985 and has the post code RH20 2LG.

1.1.5 Waterwise defined Water Neutrality as:

'For every new development, total water use in the region after the development must be equal to or less than the total water uses in the region before the new development.'

1.1.6 Achieving water neutrality involves using a three-step approach. First, the demand for water from the new development must be reduced as far as is practicable, followed by the re-use of water; then the remaining demand should be offset within the region. Following this three-step approach allows the volume that requires offsetting to be reduced which ultimately reduces the cost of the overall scheme. This is noted within the Waterwise neutrality definition, which defines the three steps which should be undertaken in order to achieve water neutrality in their recent review dated January 2021.

- Reduce water demand in the new development through improvement in efficiency.
- Re-use water, wherever possible.
- Offset the remaining water demand from the new development if required.

1.1.7 The report will be split into the following sections:

- A Review of Water Neutrality demand reduction
- A calculation of estimate water usage from proposed development
- Identification of measures that can be first used to reduce this demand
- Identification of measures that can be used to re-use water
- Establish solutions to offset that demand in order to achieve neutrality.

1.1.8 This report will follow the methods documented within *'A Review of Water Neutrality in the UK'* carried out by Waterwise in January 2021. The document provides details on how developments can achieve water neutrality by utilising the 3-stage approach.

Fig 2. 3-stage approach

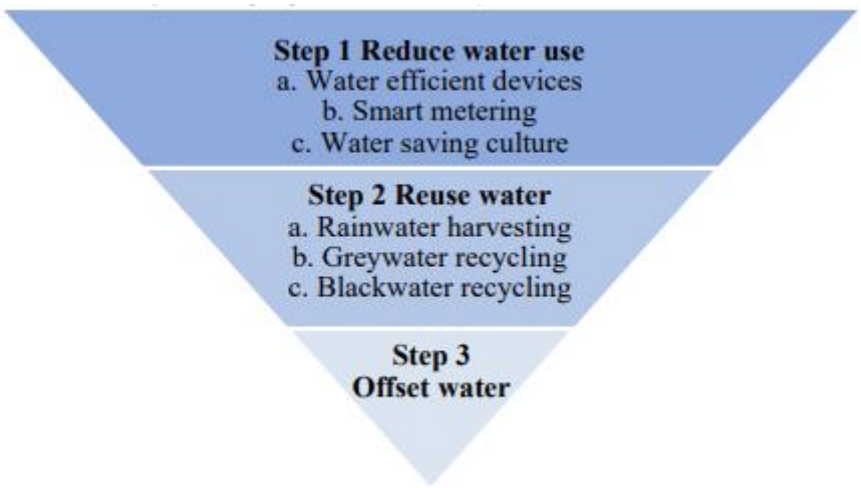

1.1.9 Some increase in water demand within the region from planned development during the local plan period is inevitable. However, it can be minimised by making the site as water efficient as possible.

1.1.10 Per Capita Consumption (PCC) is used as a measure of water use and is the volume of water that is used by one person in one day. It is usually measured in litres per person per day (l/p/d). The average PCC within Southern Water's 'Sussex North Water Resource Zones (WRZ)' is 135 l/p/d. Homes without a water meter consume on average 160 l/p/d and for homes with a water meter, consume on average 131 l/p/d.

1.1.11 Part G of the Building regulations currently states that new build housing should achieve a minimum of 125 l/p/d. A tighter target of 110 l/p/d can be requested if the local authority can establish a clear need based on available evidence.

1.1.12 The table below indicates different demand scenarios including Southern Water's Target 100 Ambition to achieve 100 l/p/d, as well as further scenarios where water demand is cut more dramatically.

Table 1 PCC Demand Scenarios

Demand Scenario	Per Capita Consumption (l/p/d)
British Flows and Loads	150
Building Regulations Standard	125
Building Regulations Optional	110
Target 100	100
Realistic Achievable	85
Ambitious	62

1.1.13 The benefits of water neutrality are wide ranging, from financial and reputational to environment and social. For a new domestic building, they could include:

- **Saving Water** – Over 100,000 litres of water can be saved per year for each water neutral home built
- **Saving Carbon** – A significant CO2 saving can be achieved by reducing the demand for hot water for baths, showers, basins, dishwashers and washing machines
- **Saving Money** – Both water and energy bills will reduce
- **Reducing environmental impact** – Decreasing water abstracted from rivers and groundwater sources
- **Improved Resilience** – For the future by minimising the additional pressure on water resources
- **Enabling future housing growth** – In water scarce areas by reducing the impact of new homes and buildings
- **Reducing discharge to sewage** – by using less water, collecting rainwater and recycling greywater, less water is discharged to the drainage network
- **Short pay-back time** – After approximately 5 years the saving of water neutrality will outweigh the costs of doing so.

2 Executive Summary

2.1.1 The existing site is currently a disused agricultural building, the water demand for which is therefore **0 l/day.** The proposed scheme will consist of converting this building into two 3-bedroom dwellings, the water demand for which will be **543.40 l/day** prior to any mitigation techniques.

2.1.2 As proven within this report, the installation of water efficient fittings and the implementation of rainwater harvesting techniques for both the proposed dwellings and the purchase of water credits will result in the site being water neutral.

Table 2 Water Usage Comparison

Existing Water usage	**0 l/day**
Proposed Scheme water usage prior to mitigation	543.4 l/day
Proposed scheme water usage post mitigation	304.3 l/day
Number of water credits purchased	305
Proposed Scheme water usage equal to or lower than existing site	Yes

3 Calculation of estimate water usage from the proposed development

3.1.1 Before any necessary steps to achieve water neutrality can be determined, the total water demand for the proposed development must first be calculated. The proposed scheme will consist of converting the existing agricultural building into two new 3-bedroom dwellings. In accordance with the average occupancy levels set out by Horsham DC, the population for each of the new properties will be 2.47.

Table 3 Average occupancy levels

Number of bedrooms	Average occupancy level
1	1.32
2	1.88
3	2.47
4	2.86
5	3.09

3.1.2 As the proposed property will be a new dwelling, Policy 37 of the Horsham District Planning Framework (HDPF) triggers the requirement for the optional building regulations standard of 110 litres per person per day (l/p/d), therefore:

2 x (2.47 x 110 l/p/d)
= 543.40 l/day

3.1.3 The following sections within this report will cover measures that can be undertaken in order to reduce the water consumption of the proposed property and aim for the 'Ambitious' PCC of 62/l/p/d.

4 Step 1 – Identifying measures that can be used to reduce this demand

4.1.1 The first and most important step in achieving water neutrality will be to ensure that the water used by the proposed development is used as efficiently as possible; the smaller the water demand of the building due to the design and fittings, the less water is needed to be reused and offset. There are a number of ways of achieving a smaller water demand:

- Fitting homes with efficient products, such as:
  - Aerated Taps
  - Aerated Shower heads
  - Low Flush Toilets, or air flush toilets
  - Water efficient white goods
- Installing Smart Meters, this allows the consumer to see how much water they are using, and how this affects their water saving bill. This can help consumers to reduce water usage, identify leaks, and meet water saving targets, with the bonus of reduced bills.
- Designing home to encourage water saving behaviours, this can also help reduce water use and help ensure that other measures that are put in place are effective. Education and awareness are important components of achieving water neutrality.

4.1.2 Building Regulations Part G states that when the new fittings approach is used, the water consumption of the fittings must not exceed a total of 125 l/p/day/. The values are listed in the table 4 below:

Table 4 Maximum Fittings Consumption from Building Regulations Part G

Water Fitting	Maximum Rating
WC	6/4 litres dual flush or 4.5 litres single flush
Shower	10 l/min
Bath	185 litres
Basin Taps	6 l/min
Sink Taps	8 l/min
Dishwasher	1.25 l/place setting
Washing Machine	8.17 l/kilogram

4.1.3 Should the proposed development be required to comply with the optional water efficiency as part of the conditions for planning permission, the estimated consumption of water can be calculated via the Optional requirement level of fittings consumption. This is listed within Building Regulations Part G, which also states that the water consumption must not exceed 110 l/p/day, and the maximum fittings consumption for optional requirement can be found in Table 5 below:

Table 5 Maximum fittings consumption optional requirement level from Building Regulations Part G

Water Fitting	National Base Level
WC	4/2.6 litres dual flush
Shower	8 l/min
Bath	170 litres
Basin Taps	5 l/min
Sink Taps	6 l/min
Dishwasher	1.25 l/place setting
Washing Machine	8.17 l/kilogram

4.1.4 However, to improve on the above requirements, the proposed site can implement the following measures in order to focus on becoming a water efficient development. By installing the following features, the development can achieve a water demand of around 85 l/p/d, which aligns with a 'Realistic Achievable' PCC. See Table 6 below:

Table 6 Water efficient fittings consumption

Water Fitting	Consumption Level
WC	4/2.6 litres dual flush
Shower	6 l/min
Bath	145 litres
Basin Taps	2.5 l/min
Sink Taps	5 l/min
Dishwasher	0.67 l/place setting
Washing Machine	5.5 l/kilogram

Please note that by accepting this report, you accept the low flow rates of the proposed fittings required to achieve water neutrality. CGS Civils cannot be held responsible for any reduced comfort levels that may arise from the use of these fittings.

4.1.5 Water demand can also be reduced through fitting metres, which help to identify leaks and track water consumption as a way to support and encourage behavioural changes such as, not leaving the tap running when brushing teeth and using eco settings on the washing machine and dishwasher. It should be noted that behavioural changes have not been used within the calculations within this report as it is impossible to enforce.

Table 7 Practical Summary of Step 1

Step 1: Reduce Water				
Toilets	Cistern displacement devices (toilet hippos)	Retrofit flush devices to dual flush	Fix leaky toilets	
Taps	Tap inserts (aerators)	Low flow restrictors	Push taps	Infrared Taps
Showers/baths	Low flow shower heads (less than 8litres/min)	Shower timers	Reduced bath frequency & volume	
Outdoors	Hosepipe flow restrictors	Hosepipe siphons	Water butts	Mulches and composting to keep soil moist
Smart Metering	Leakage information	Encourage behavioural changes	Innovative tariffs	Savings estimates

4.1.6 By installing the water efficient devices listed above, it is possible to reduce the water demand on site from **543.40 l/day** down to **439.9 l/day.**

2 x (2.47 x 89.04 l/p/d)

= **439.9 l/day**

- *2 (number of properties) x 2.47 (average occupancy level for a 3-bedroom dwelling) x 89.04 (Appendix A – Water Calculator for Proposed fittings)*

5 Step 2 – Identify measures that can be used to re-use water

5.1.1 Once the water demand has been reduced via the installation of water efficient products, water reuse should be considered. The term 'water reused' refers to the capture, treatment (if it is required) and the use of alternative water supplies for non-potable purposes. It includes:

- Rainwater and surface water harvesting
- Greywater recycling (typically the used water from baths, showers and hand basins)
- Wastewater recycling.

5.1.2 The installation of water reusing technology has the potential to save significant amounts of water; for example, 24% of water in the home is used for flushing the toilet and only 4% externally in the garden meaning a water reuse system could save at least a quarter of the demand if it was installed for these purposes. Depending on the quality and the system installed, it could also be possible to re-use water for a washing machine which accounts for 12% of total water usage.

Table 8 Practical Summary of Step 2

Step 2: Reuse Water			
Rainwater Harvesting	Small scale water butt	Rainwater Harvesting system for individual homes and buildings	Large scale surface water harvesting
Greywater Recycling		Small systems for individual homes	Largest scale systems for commercial and mixed-use sites

5.1.3 In this instance however, rainwater harvesting is proposed to provide water to the proposed dwellings' toilets, washing machines, baths as well as provide **5 l/p/day** for outdoor use. The installation of water reusing technologies will further reduce the water demand on site, depending on the harvesting tank installed. The proposed roof area is sufficient to provide the required water to the property via a rainwater harvesting tank as well as has sufficient capacity for a 35-day drought period. **See Appendix C**.

5.1.4 By installing the water efficient devices listed above as well as the rainwater harvesting technologies listed above, the total demand will be reduced to:

2 x (2.47 x 61.6)

= 304.3 l/day

- *2 (number of properties) x 2.47 (average occupancy level for 3-bedroom dwelling) x 61.6 (Appendix B – Water calculator for proposed fittings with RWH)*

Table 9 Part G rainwater collection calculator

Rainwater Collection Calculation (for each individual dwelling)	
Collection Area (m^2)	88
Yield Coefficient	0.8
Depth of rainfall (mm/year)	805
Daily rainwater collection (litres)	155.16
Number of occupants	2.47
Daily Rainwater per person (litres)	62.82

5.1.5 A calculation is to be made to ensure that the rainwater harvested is greater than the rainwater demand within the dwelling. The following is a calculation for 5% of the annual rainwater yield and has been calculated using Rainfall data from the National River Flow Archive which provides annual rainfall data as recorded by the Met office and follows the intermediate approach as detailed within BS 8515:2009.

5.1.6 Using the rainfall catchment data provided by the National River Flow Archives, the closest station point to the site is 41014 – Arun at Pallingham:

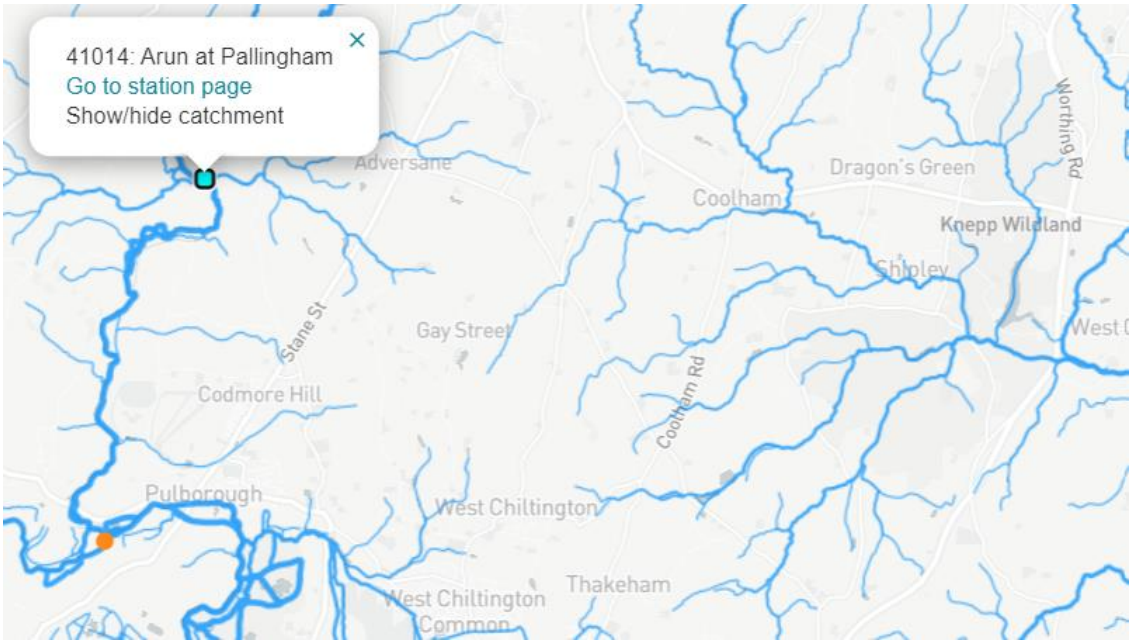

5.1.7 The latest data available for this station is SAAR 1961-1990, which shows that the depth of rainfall in the area is 805mm.

$$Y_R = A \times e \times h \times n \times 0.05$$

Where:

Y_R = the annual rainwater yield (l)
A = The collecting area (m^2)
e = yield coefficient (%)
h = depth of rainfall (mm)
n = hydraulic filter efficiency

$$\underline{\mathbf{2,692}} = 88 \times 0.8 \times 805 \times 0.95 \times 0.05$$

5.1.8 In order to ensure there is sufficient roof area, another calculation from BS 8515:2009 must be carried out in order to calculate the annual demand within the property. The following is a calculation for 5% of the annual non-potable water demand.

$$D_N = P_d \times n \times 365 \times 0.05$$

Where:
D_N = the annual non-potable water demand (l)
P_d = The daily requirement per person (l)
n = number of persons

$$1397.4 = 31 \times 2.47 \times 365 \times 0.05$$

5.1.9 To ensure there is sufficient area to allow a 35-day drought storage, an extra 35 days is to be included:

$$\underline{\mathbf{1531.4}} = 31 \times 2.47 \times 400 \times 0.05$$

Fig. 4 Potential Rainwater Harvesting tank locations



5.1.10 From the above water calculations, we have:

- Proposed water usage rate of 110 litres/person/day based on 'HDPF'.
- Which can then be reduced to a proposed water usage rate of 61.66 litres/person/day with water efficient devices and rainwater harvesting.

5.1.11 In order to provide a cumulative consumption comparison between the existing and the proposed water usage, the occupancy rates would be for 'as existing' and 'as proposed':

- Proposed water demand from HDPF – 110 l/p/d at an occupancy of 2.47 people per dwelling = **271.7 l/day** for each dwelling, or **543.4 l/day** for the entire site**.**
- Proposed Water Demand with water efficient devices listed in **Table 4** and Rainwater harvesting – 61.66 l/p/d at an overall occupancy rate of 2.47 people per dwelling = **152.15 l/day** for each dwelling, or **304.3 l/day** for the entire site**.**

5.1.12 The client is willing to install two 3000-litre rainwater harvesting tanks, one for reach property, in order to achieve total self-sufficiency within the property. The harvesting tank is to be fitted with the following equipment in order to get the rainwater to a level safe for human consumption.

- Aerator
- Lowara 0.55 kW variable speed booster set
- PREFILT103/4 10" prefilter housing
- CRT10SW-05 5 micro sediment filter
- WH1MH Whole house water filter

5.1.13 The likely contaminants associated with rainwater harvesting systems and how to treat them are:

- Dust – Sediment Filter
- Nitrates – Heavy Metal reduction filter
- Organics – Carbon Filter

Table 9 Schedule of Example Fittings

Water Fitting	Water Usage	Example Fitting:
WC	4/2.6 litres dual flush	E8967 Sandringham 21
Shower	6 l/min	Hansgrohe Crometta Hand Shower 100
Bath	145 litres	Carron Shallow Single Bath
Basin Taps	2.5 l/min	Grohe Eurosmart Cosmopolitan
Sink Taps	5 l/min	Carron Phoenix Pura Plus
Dishwasher	0.73 l/place setting	Bosch SMS6EDI02G
Washing Machine	5.5 l/kilogram	Fisher & Paykel WM1490F1

Please note that the above fittings are examples only. Ensure that your chosen fittings meet the required water usage. All basin and Kitchen taps can be fitted with flow restrictors instead of a reduced flow tap in order to achieve necessary reduced water usage.

6 Step 3 – Offsetting remaining water demand

6.1.1 Finally, the remaining water demand must be offset. The client and Sussex Water Neutrality have drawn up a contract for the purchase of 305 water credits in order to offset the water demand from the site. A copy of this contract can be found in **Appendix E.**

6.1.2 The proposal is to offset the proposed dwellings against a water offsetting scheme at 40 Caburn Heights, Crawley RH11 8QX. A summary report can be found within **Appendix F.**

7 Conclusion

7.1.1 To summarise:

- The proposed development will use on average **543.40 l/day** prior to any mitigation techniques.
- This water demand can be reduced to **439.9 l/day** through the installation of water reducing appliances.
- Re-using the water through rainwater harvesting tanks can further reduce the water demand down to **304.3 l/day.**
- The remaining water demand is to be offset via the purchase of 305 water credits.

8 Appendices

8.1 Appendix A:

Table 11 – Water Calculator from Building Regulations Part G – Information input from proposed site with water efficient devices from Table 6.

The Water Calculator for New Dwellings with Water efficient measures					
Installation Type	Unit of measure	Volume/ flow rate	Use factor	Fixed use	Litres/person/day
WC (Single Use)	Flush volume (l)	0	4.42	0	0
WC (Dual Flush)	Full Flush Vol.	4	1.46	0	5.84
	Part Flush vol.	2.6	2.96	0	7.70
WC (Multiple Fittings)	Average effective flush volume (l)	0	4.42	0	0
Taps (excl. Kitchen)	Flow rate (l/min)	2.5	1.58	1.58	5.53
Bath (shower also present)	Capacity to overflow (l)	145	0.11	0	15.95
Shower (bath also present)	Flow rate (l/min)	7	4.37	0	30.6
Bath only	Capacity to overflow (l)	0	0.5	0	0
Shower only	Flow rate (l/min)		5.6	0	0
Kitchen sink taps	Flow rate (l/min)	5	0.44	10.36	12.56
Washing Machine	Litres/kg dry load	5.5	2.1	0	11.55
Dishwasher	litres/place setting	0.73	3.6	0	2.62
Waste disposal unit	litres/use	0	3.08	0	0
Water softener	litres/person/day	0	1	0	0
		Total Calculated use (l/p/d)			92.358
		Contribution from greywater (l/p/d)			0
		Contribution from rainwater (l/p/d)			0
		Normalisation factor			0.91
		External water use			5
		Total water consumption (36(1)) (l/p/d)			89.045

8.2 Appendix B:

Table 12 – Water Calculator from Building Regulations Part G – Information input from proposed site with water efficient devices from Table 6 with Rainwater Harvesting supplying water to the toilets, baths, washing machines as well as 5 l/p/day for outdoor use.

The Water Calculator for New Dwellings with Water efficient measures					
Installation Type	Unit of measure	Volume/ flow rate	Use factor	Fixed use	Litres/person/day
WC (Single Use)	Flush volume (l)	0	4.42	0	0
WC (Dual Flush)	Full Flush Vol.	4	1.46	0	5.84
	Part Flush vol.	2.6	2.96	0	7.70
WC (Multiple Fittings)	Average effective flush volume (l)	0	4.42	0	0
Taps (excl. Kitchen)	Flow rate (l/min)	2.5	1.58	1.58	5.53
Bath (shower also present)	Capacity to overflow (l)	145	0.11	0	15.95
Shower (bath also present)	Flow rate (l/min)	7	4.37	0	30.6
Bath only	Capacity to overflow (l)	0	0.5	0	0
Shower only	Flow rate (l/min)		5.6	0	0
Kitchen sink taps	Flow rate (l/min)	5	0.44	10.36	12.56
Washing Machine	Litres/kg dry load	5.5	2.1	0	11.55
Dishwasher	litres/place setting	0.73	3.6	0	2.62
Waste disposal unit	litres/use	0	3.08	0	0
Water softener	litres/person/day	0	1	0	0
		Total Calculated use (l/p/d)			92.358
		Contribution from greywater (l/p/d)			0
		Contribution from rainwater (l/p/d)			30.086
		Normalisation factor			0.91
		External water use			5
		Total water consumption (36(1)) (l/p/d)			61.66

8.3 Appendix C:

Rainwater Harvesting Tank Size Calculator, for each individual dwelling.

COLLECTABLE ROOF AREA (M²)

Main Building	Width:		Length:		Rain Collection Area:	0 m²
Extension one	Width:		Length:		Rain Collection Area:	0 m²
Extension Two	Width:		Length:		Rain Collection Area:	0 m²
Extension Three	Width:		Length:		Rain Collection Area:	0 m²
Or the total roof area, if you already know it:				88	Total area of collectable roof space:	88 m²
Select Your Region		England SE & Central			Average rainfall per year in your region:	64 L
Collectable rainwater per annum in litres - discounted by 20% to account for water loss						**45056 L**

USE OF RAINWATER IN THE BUILDING

	people:	bedrooms:	
Number of people or bedrooms in the building -	2.47	0	
☑ Number of clothes washing cycles per day (*50 litres each*)	0.50 Cycles	25.00	L
☑ Number of toilet flushes per day (*4.42 flushes per person, average 5 litres each*)	8.84 Flushes	44.20	L
Outdoor use in litres, per person per day (*recommended 5 litres per person per day*)	5	10.00	L
Amount of water you require every day		79.2	L
Amount of water you require every year	**DEMAND**	**28908**	**L**

FINAL FIGURES

How many days drought protection do you need? Typically 21 (18 minimum)	35	
Capacity of water storage in litres required for drought protection	2772.00	L
The lesser of YIELD (blue) or DEMAND (green) per annum	28908	L
Therefore, volume of rainwater storage required	**2772**	**L**

CONCLUSION

Is there sufficient roof water available:		YES
Recommended tank size from our shallow dig range:	F-Line Range:	3000 LITRE F-LINE TANK

8.4 Appendix D:

Example Rainwater Harvesting Tank Brochure:

Carat Rainwater Harvesting solutions



RAINWATER HARVESTING

WASTEWATER SYSTEMS

RAINWATER RETENTION

DRINKING WATER RESERVOIRS

Edition 2007
Salesfolder C 27-2 Carat EN

Benefits of the Carat System

Flexible, stackable, user-friendly and better for the environment

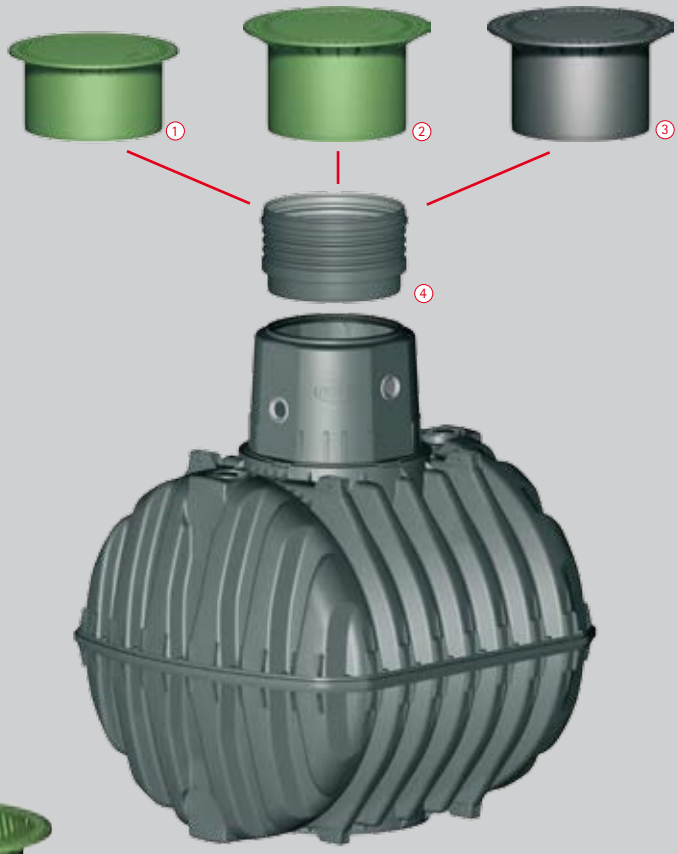

① **Mini telescopic dome shaft with PE lid**
Designed for non-vehicle loading and ideal for garden use, the shaft can be adjusted from 750 - 950 mm and tilted up to 5% to sit flush with the ground level. Includes a PE lid with child safety lock. This item is supplied in green.

② **Maxi telescopic dome shaft with PE lid**
Designed for non-vehicle loading and ideal for the Complete Package (Eco-Plus), the shaft can be adjusted from 750 - 1,050 mm and tilted up to 5% to sit flush with the ground level. Includes PE lid with child safety lock. This item is supplied in green.

③ **Vehicle loading telescopic dome shaft with cast iron lid**
Designed for vehicle loading applications, the tank can be adjusted from 750 -1,050 mm and tilted up to 5% to sit flush with the ground level. Includes child-safe cast iron cover. This item is supplied in dark grey.

④ **Extension**
For use with the telescopic dome shaft to increase the height of the lid from 1,000 - 1,500 mm. Always refer to installation instructions when usig this item.





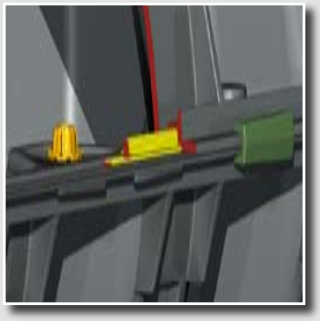

Logistical advantages of the Carat

The Carat tank consists of two half shells which can be stacked on top of each other, allowing multiple tanks to be stacked on a single pallet for shipping. For example, it is possible to stack five 6,500 ltr Carat tanks, or nine 2,700 ltr Carat tanks on a single pallet. This allows a standard 40 ft. shipping container to house a total tank volume of up to 130,000 ltrs! The tanks unique stacking feature directly reduces transport costs and environmental impact from vehicle emissions, whilst allowing shipments to any destination in the world.

Easy and safe assembly

- The patented quick connection (illustrated in green), allows the Carat tank to be assembled without screws in only few minutes. Disassembly is possible at any time.
- The first-class EPDM material used in the profile sealings (illustrated in yellow), has been laboratory tested to last more than 25 years.
- The centering bolt (illustrated in orange) assures the accurate and easy assembly of the two half shells preventing any leaks

The Carat

The first Rainwater underground tank of its kind!

NEW

Unique manufacturing process

The GRAF Carat underground tank is unlike any other underground tank in the world. It is the largest tank of its kind to be manufactured by injection compression moulding. This technique provides the tank with unbeatable stability and ensures that each component is produced with the highest of accuracy.

Unlike other underground tanks, the wall thickness is equal in all areas of the tank. The production tolerances are kept to a minimum, resulting in a product of the highest quality, which is strong, accurate, reliable and extremely user-friendly.

To manufacture the Carat range, one of the worlds largest injection moulding systems had to be developed.

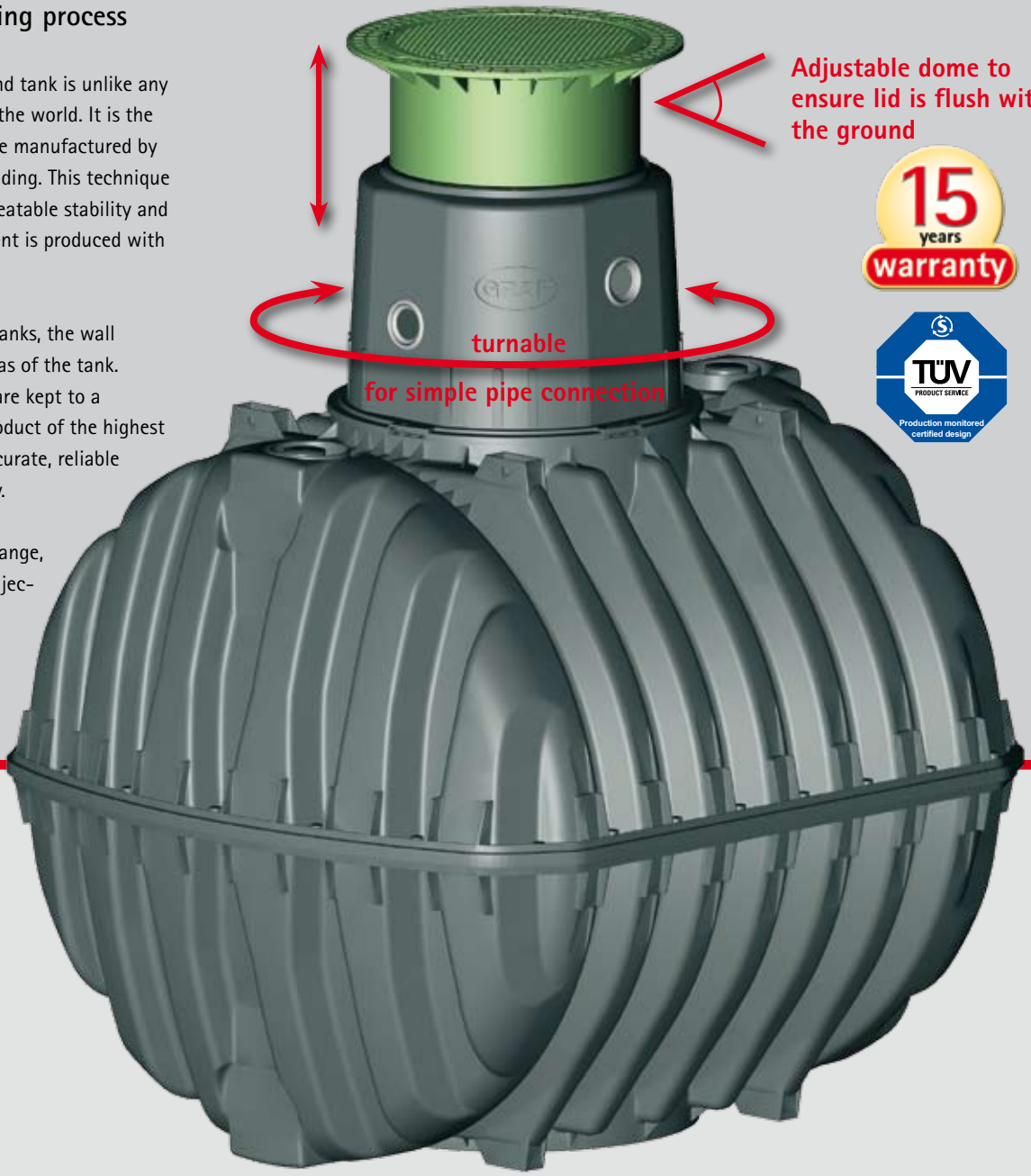

The Carat underground tank is made from Duralen®, a high quality material that is extremely rigid and impact resistant, therefore ideally suited for producing underground tanks. With very low warping characteristics and high stiffness, this material provides high stability and a unique life expectancy. Duralen® can also be easily recycled which reduces waste and environmental impact.

Duralen®

The modular Carat system

Choose your tank size

NEW

Carat, vehicle bearing underground tank

Size 2,700 – 13,000 litres
(700 – 3,400 US-Gallons).
Designed to be used in conjunction with the vehicle loading telescope dome shaft. The access dome is designed in accordance to DIN testing.

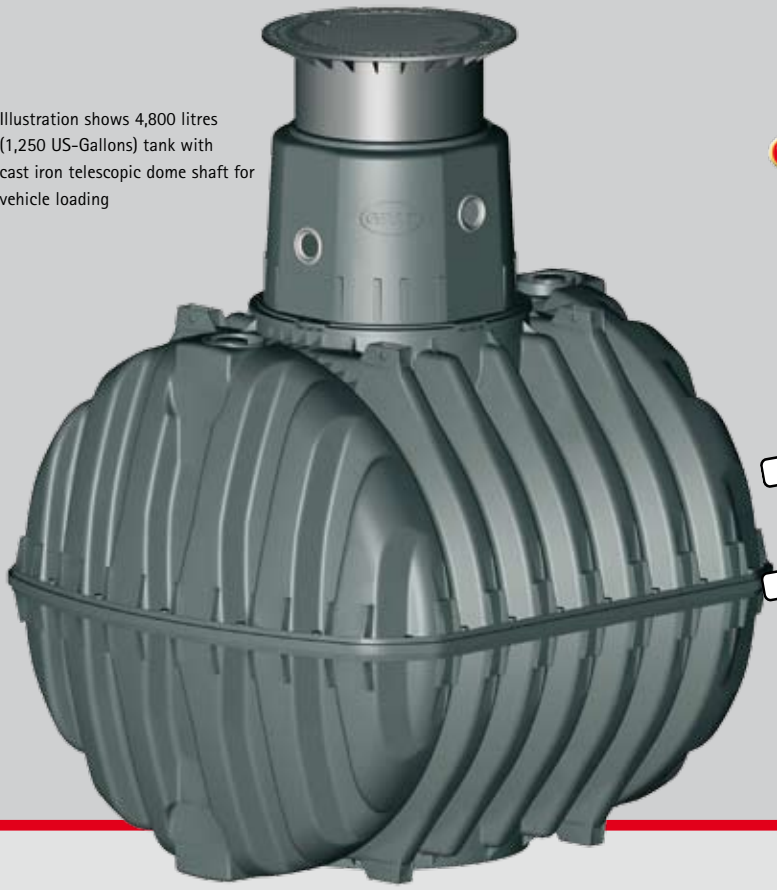

Illustration shows 4,800 litres (1,250 US-Gallons) tank with cast iron telescopic dome shaft for vehicle loading

15 years warranty

EINSTIEGSDOM nach DIN EINSTIEGSDOM

TÜV

European 0870877 Patent

US 5878907 Patent

Volume

Litres	US-Gallons
2,700	700
3,750	1,000
4,800	1,250
6,500	1,700
7,500*	2000*
9,600*	2,500*
13,000*	3,400*

* Set consisting of two Carat underground tanks

Technical data

Dimensions/weight	2,700 L 700 US-Gallons	3,750 L 1000 US-Gallons	4,800 L 1,250 US-Gallons	6,500 L 1,700 US-Gallons	7,500 L* 1,850 US-Gallons	9,600 L* 2,500 US-Gallons	13,000 L* 3,400 US-Gallons
Length	2,080 mm (81.9 inches)	2,280 mm (89.8 inches)	2,280 mm (89.8 inches)	2,390 mm (94.1 inches)	Set consisting of two Carat underground tanks		
Width	1,565 mm (61.6 inches)	1,755 mm (69.1 inches)	1,985 mm (78.1 inches)	2,190 mm (86.2 inches)			
Heigth (including tank dome)	2,010 mm (79.1 inches)	2,200 mm (86.6 inches)	2,430 mm (95.7 inches)	2,710 mm (106.7 inches)			
Height of tank dome	610 mm (24.0 inches)						
Internal Ø tank dome	800 mm (31,5 inches)						
Weight	120 kg (265 lbs.)	150 kg (331 lbs.)	185 kg (408 lbs.)	220 kg (485 lbs.)			
Load							
Max. axle load	Car-bearing				see 3,750 L tank	see 4,800 L tank*	see 6,500 L tank*
Earth covering	800 - 1,200 mm (31.5 - 47.2 inches)						
Groundwater							
Groundwater stable	up to the middle of the tank				see 3,750 L tank	see 4,800 L tank	see 6,500 L tank
Required earth covering	800 mm (31.5 inches)						



For dimensions see 3,750 L tank*



For dimensions see 4,800 L tank*



For dimensions see 6,500 L tank*

Garden Comfort package

The simple garden solution with submersible pump system



Carat Garden Comfort underground tank package

- Simple to install and use
- Use a simple hose connection socket and pressure sensitive pump for automatic water activation, purposely designed for the Gardena® system
- Low visual impact
- Reduces electricity consumption by using a pressure drop activation system, so that electricity is only used when required

Scope of supply

① Carat underground tank
② Mini telescopic dome shaft for pedestrian loading with an adjustable PE lid
③ Filter package 2, consisting of:
- Internal Universal Filter 3
- Inflow stilling system for controlling the water inflow
- Overflow siphon and rodent guard
- Spannfix pipe connection sleeve

④ Garden Comfort pump package, consists of:
- Integra-Duo® 1100 Submersible pump, with protection against dry running and automatic Start / Stop function
- Floating water extraction unit
- Water hose connection box
- 10 m of pressure hose

Volume

Litres	US-Gallons
2,700	700
3,750	1,000
4,800	1,250
6,500	1,700
7,500*	2,000*
9,600*	2,500*
13,000*	3,400*

* Set consisting of two Carat underground tanks

Vehicle loading version available on request

Eco-Plus package

The ideal solution for use in the home and garden

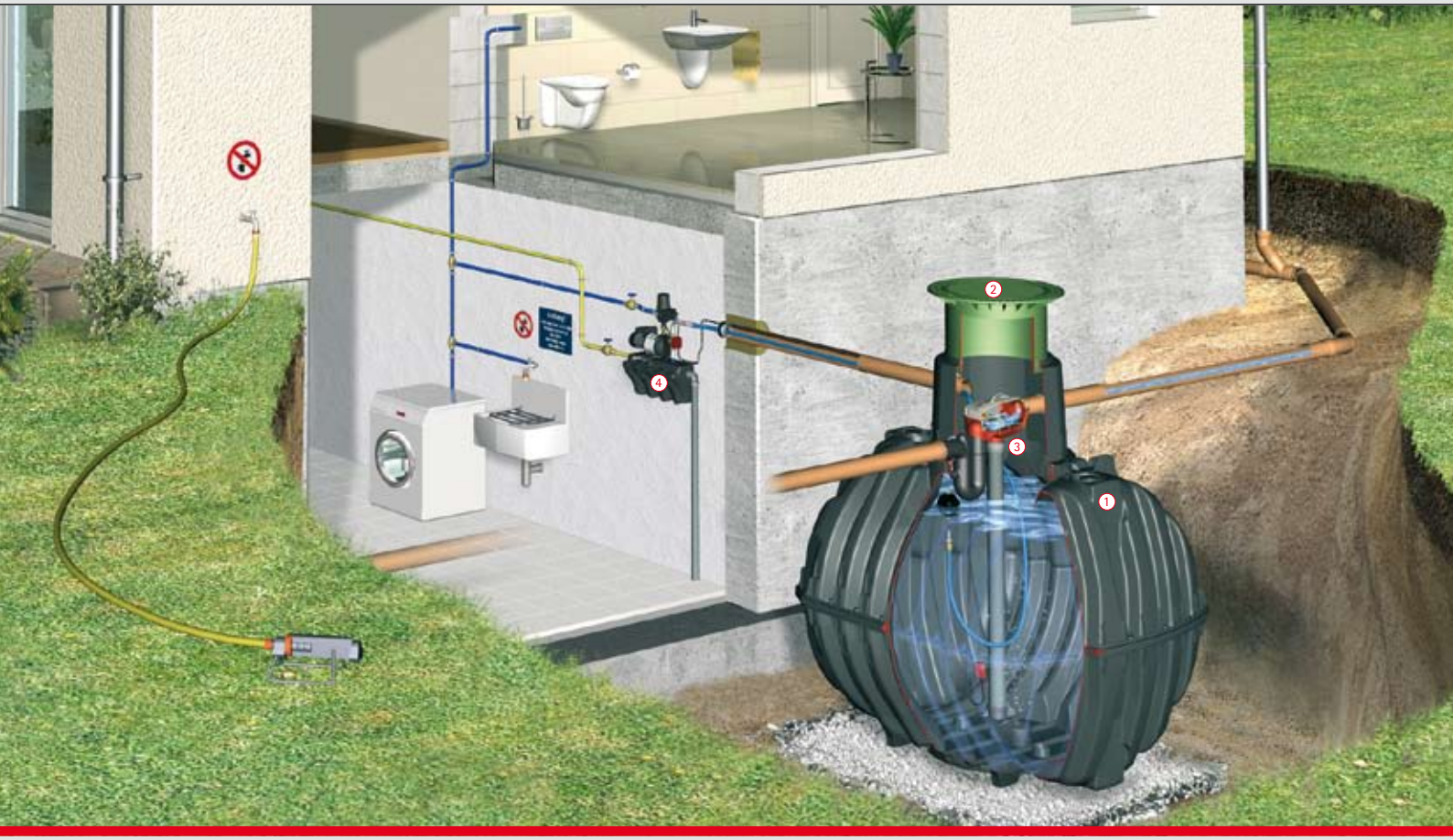

Carat underground tank package Eco Plus

- Economic package solution
- Patented filter technology and in-house pump system with automatic switch-over to mains water supply
- Easy to assemble due to modular components
- Float switch controlled
- Only one cover viewable on the surface

Scope of supply

① Carat underground tank
② Maxi telescopic dome shaft for pedestrian loading with an adjustable PE lid
③ Filter package 3, consisting of:
- Internal Optimax-Pro (self-cleaning) filter
- Inflow stilling system for controlling the water inflow
- Overflow siphon and rodent guard
- Spannfix pipe connection sleeve

④ Eco-Plus pump package consists of:
- Water supply control unit
- Floating water extraction unit
- DN 100 wall duct
- Labelling set
- Suction pipe

Volume

Litres	US-Gallons
3,750	1,000
4,800	1,250
6,500	1,700
7,500*	2,000*
9,600*	2,500*
13,000*	3,400*

*Set consisting of two Carat underground tanks

Vehicle loading version available on request

Internal filter technology

NEW

Efficient cleaning system with high water yield

Optimax Pro, self-cleaning Filter

Advantages

- Provides over 95% water yield
- Utilises patented, high quality filter technology
- Low-maintenance (self-cleaning)
- TÜV-tested to German standards
- Space-saving filter technology inside the tank
- Filter housing can be easily removed without the need for tools
- Transparent lid for filter visibility
- **Can manage roof areas up to 350 m²**
- Standard 100 mm connections
- Self cleaning Opticlean system available as an optional extra
- Low offset height of 165 mm between inlet and outlet



Universal Filter 3

up to 100% water yield

Advantages

- Allows up to 100% water yield
- Ideal for small roof surfaces
- Space-saving filter technology inside the tank
- The Filter housing can be easily removed without the need for tools
- Ideally suited when connecting the tank to a soakaway
- 250 mm offset height between inlet and outlet
- **Can manage roof areas up to 350 m²**
- Standard 100 mm connections
- Emergency overflow system available (optional extra)

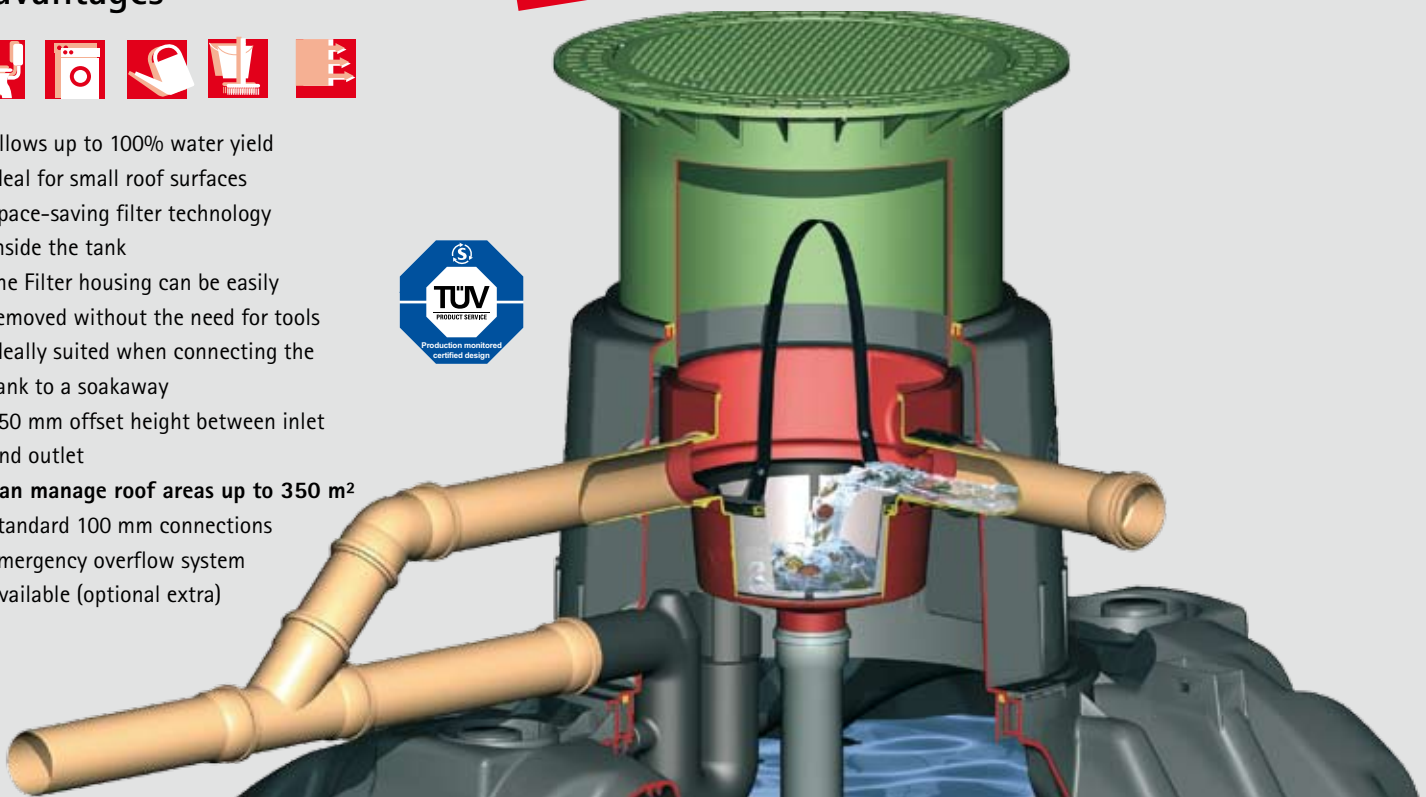

GRAF – Setting the standards in quality



Production site at Teningen (Germany) near Freiburg



Production site at Dachstein (France)

High Quality Manufacturing

GRAF has invested more than € 20 million in a new production site specially set up for the new CARAT range. The new facility has an approximate surface area of 155,000 m² - that equals 31 football pitches - one of the most modern production facilities for plastic products in the world

For over 40 years, Otto Graf GmbH has been offering high-class plastic products to its customers. In 1974 GRAF developed its first pioneering range of rainwater harvesting products. Now GRAF is recognised as Germany's number one rainwater harvesting brand and proudly presents the new premium Carat range of the tanks. A range which is manufactured in one of the most modern and efficent plastic manufacturing facilities in the world!

RAINWATER HARVESTING



STORMWATER MANAGEMENT



AGRICULTURAL CONTAINERS



SEWAGE TREATMENT PLANTS



Warranty clause:
The warranty mentioned in this brochure only refers to the tank in question and not to the accessories. Within the warranty period we grant free replacement of the material. Further benefits are excluded. Pre-condition for warranty benefits are proper handling, assembly and installation according to the mounting guidelines.

N.B. Protect tanks from frost when installed above-ground! In case of groundwater installation, please contact us for further information previous to the purchase!

For all indications of measurements in this brochure we reserve a tolerance of +/- 3%. The useful volume of the tanks may be up to 10% lower than the tank capacity, according to the connecting option.

Technical modifications and further development of the different products are subject to change. Errors excepted.

Otto Graf GmbH
Kunststofferzeugnisse
Carl-Zeiss-Straße 2-6
79331 Teningen / Germany

Phone: +49 (0) 76 41/5 89-0
Fax: +49 (0) 76 41/5 89-50
info@graf-online.de
www.graf-online.de

Over 40 years of quality and innovation

© Otto Graf GmbH, Teningen. Germany
Reproduction – also in extracts – only with written authorisation.

8.5 Appendix E:

Water credit purchase contract.

SUSSEX WATER NEUTRALITY

Water Credit Purchase Option Agreement - Developer

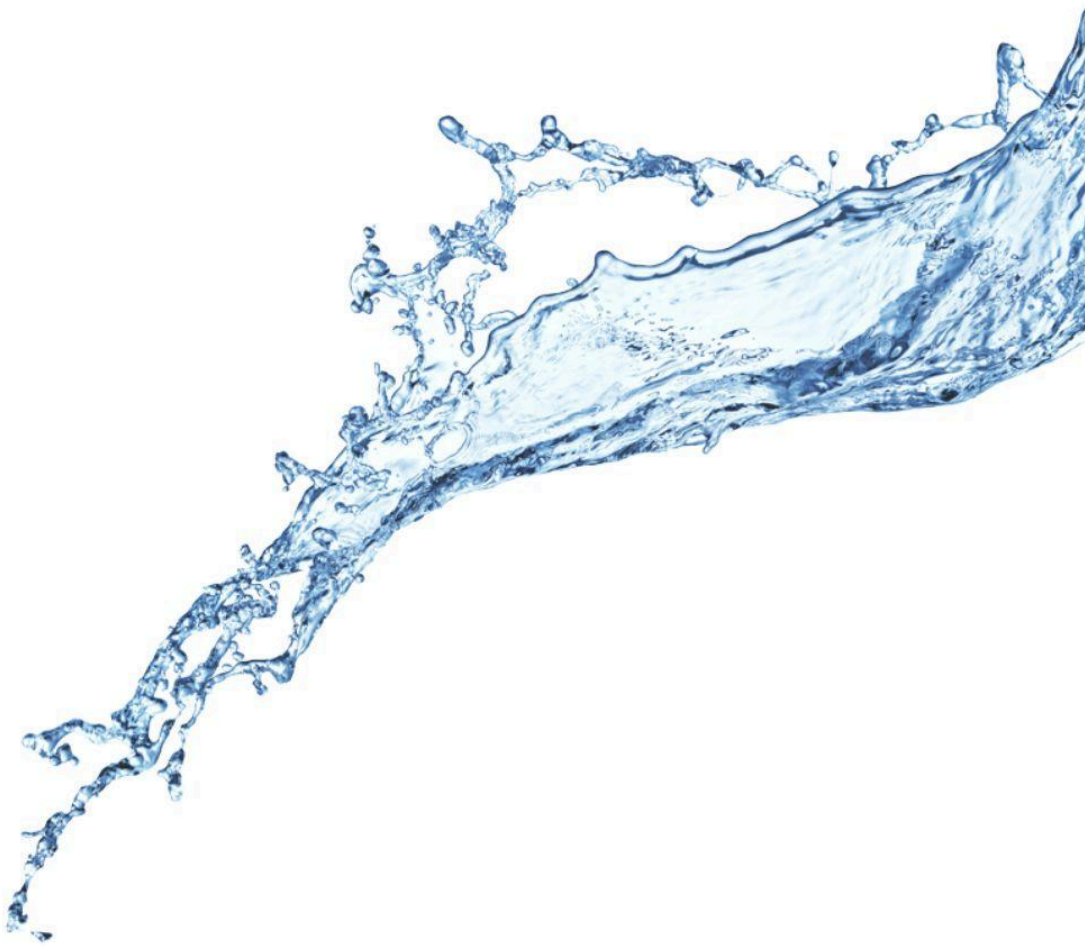

Water Credit Purchase Option Agreement

This agreement is made and effective as of 15th July 2024

between:

1. SUSSEX WATER NEUTRALITY LTD a company registered in England with company number 15002940, whose registered office is at Maria House, 35 Millers Road, Brighton, BN1 5NP ("**Seller**"); and
2. Anthony Grocott of Thistledown Cottage, Harbolets Road, West Chiltington, West Sussex RH20 2LG

Background

- Seller is engaged in securing and selling Water Credits from Landowners within water-stressed areas.
- Developer may require Water Credits to satisfy water neutrality requirements for future development projects.
- This agreement outlines an option for the Developer to purchase Water Credits from the Seller to satisfy the requirements of the Planning Permission and any associated Statutory Agreements.

Terms of the Agreement

1. Definitions

Decision Notice: A document which formally approves or denies a Planning Application for a Development Site, issued by a Relevant Authority.

Development Site: A property or properties intended for development by the Developer pursuant to a Planning Application and which requires water neutrality offsetting by quantifiable and verifiable reductions in water usage elsewhere within the same Water Resource Zone.

Landowner: An individual or entity owning land generating Water Credits.

Landowner Agreement: The agreement between the Seller and a Landowner outlining the generation and sale of Water Credits.

Maximum Available Water Credits: 305

Option Fee: an amount equal to 35% of (Water Credit Price multiplied by Maximum Available Water Credits), plus any VAT payable thereon.

Option Notice: written notice served on the Seller by the Developer indicating their intention to exercise the option given in this agreement or an Option Notice deemed to have been served following a Deemed Exercise Event.

Option Period: 18 months from the date of this agreement, subject to extension in accordance with clause 2.3;

Planning Application: An application(s) submitted by the Developer for Planning Permission for a Development Site.

Planning Permission: A planning permission from a Relevant Authority, which shall include consent through a prior notification application, permitted development, or similar application, for development.

Relevant Authority: means either the Environment Agency, Natural England, a local authority or any other body duly authorised to make decisions relating to planning or environmental matters.

Statutory Agreements: Any agreement or unilateral undertaking relating to a Development Site (with or without other property) made or given under any of:

(a) either or both of sections 90A and 106 of Town and Country Planning Act 1990;

(b) section 111 of the Local Government Act 1972;

(c) section 33 of the Local Government (Miscellaneous Provisions) Act 1982;

(d) section 104 of the Water Industry Act 1991;

(e) any similar or equivalent statutory provision

Water Credit(s): A unit representing a daily reduction of one litre in water usage on land owned or managed by a Landowner which can be sold by the Seller and are recognised by a Relevant Authority for achieving water neutrality in development projects.

Water Credit Price: £69.00 plus VAT per unit

Water Credit Payment: means the amount equal to: Water Credit Price multiplied by the number of purchased Water Credits.

Water Offset Solution: The principle of planning, designing and licensing, water offsetting measures on a Landowner's property to generate Water Credits.

Water Resource Zone: An area defined by a Relevant Authority to manage water supply and demand.

2. **Purchase Option and Fees**

2.1. Upon payment of the Option Fee, the Seller grants the Developer an option to purchase Water Credits, not exceeding the amount of Maximum Available Water Credits, in return for payment of the Water Credit Payment.

2.2. Subject to clauses 6.4 and 6.5 the Option Fee is non-refundable.

2.3. The Developer may extend the Option Period for up to 12 months in the event;

2.3.1. The Developer can demonstrate they have made all reasonable efforts to progress the Planning Application (and any appeal, if applicable);

2.3.2. a Relevant Authority has provisionally confirmed in writing the Water Offset Solution is acceptable for the purpose of granting a Planning Permission;

2.3.3. the Developer has given the Seller not less than 2 weeks' notice of their intent to extend; and

2.3.4. the Developer pays an extension fee equivalent to 3% of the Water Credit Payment for each month the Option Period is extended.

2.4. The Developer may extend the Option Period as many times as they choose provided:

2.4.1. they have complied with clause 2.3 each time;

2.4.2. each extension will be for a set number of whole months; and

2.4.3. the total extension(s) shall not exceed 12 months from the end of the original Option Period.

3. Water Credit Allocation

3.1. The Seller will identify and secure Water Credits from suitable Landowner(s) under the terms of separate Landowner Agreement(s).

3.2. The Developer may specify preferences for the source of Water Credits (e.g., geographic location), and the Seller may endeavour to accommodate these preferences but shall be under no obligation to do so.

4. Exercising the Option

4.1. The Developer can exercise their option to purchase the Water Credits at any time during the Option Period by serving an Option Notice on the Seller.

4.2. On serving an Option Notice, including an Option Notice deemed served following a Deemed Exercise Event, the Developer must pay the Water Credit Payment (less the Option Fee) within [14] working days.

4.3. The Developer will be deemed to have immediately and irrevocably served an Option Notice in the event:

4.3.1. Planning Permission is granted for a Development Site; or

4.3.2. a Statutory Agreement is entered into relating to a Development Site,

(each a "**Deemed Exercise Event**").

4.4. Should a Deemed Exercise Event occur the Developer will be deemed to have served a valid Option Notice which shall be deemed to be dated on the earlier of (1) the date of the Decision Notice for a Planning Permission or (2) the date of execution of a Statutory Agreement. In the event both Deemed Exercise Events occur, the earliest date will be the date of the Option Notice.

5. Transfer of Water Credits

5.1. Upon receipt of the Water Credit Payment, the Seller will facilitate the transfer of Water Credits from the original Landowner to the Developer within [20] working days.

5.2. The Developer will enter into additional agreements with the Landowner(s) as reasonably required to finalise any transfer of Water Credits.

6. Planning Application Failure

6.1. Should the Developer's Planning Application be denied for reasons other than an inadequate Water Offset Solution, the Developer may, during the Option Period, elect to exercise the option and purchase the Water Credits for the Water Credit payment and:

6.1.1. apply the Water Credits to a future Development Site; or

6.1.2. sell the Water Credits to a third-party developer.

6.2. Should the Developer elect to purchase the Water Credits in accordance with clause 6.1, the Developer will pay the full Water Credit Payment plus an additional 15% of the Water Credit Payment value to cover the Seller's costs of reallocating the Water Credits ("**Reallocation Fee**").

6.3. During the Option Period, the Developer may request the Seller to attempt to find a buyer for the Water Credits over which the Developer has the option to purchase. The decision to attempt to sell the Water Credits shall be at the absolute discretion of the Seller. Should the Seller sell the Water Credits the Developer must pay the Reallocation Fee to the Seller prior to the transfer of any Water Credits.

6.4. Subject to all payments being made to the Seller, the Seller shall refund the Option Fee to the Developer in the event all of the Maximum Available Water Credits are sold to a third party within the Option Period.

6.5. In the event the Developer's Planning Application is refused due to, or including, an insufficient Water Offset Solution provided the Seller will refund the Option Fee (less any bank transfer fees) to the Developer. For the purpose of this clause an "insufficient Water Offset Solution" means a Water Offset Solution which could not have been reasonably, promptly and efficiently rectified by the Seller to meet the planning requirements, which shall be determined exclusively by the Seller, acting reasonably.

7. Seller's Obligations

7.1. To support the Developer's Planning Application for the Development Site, the Seller will:

7.1.1. identify and secure Water Credits from suitable Landowner(s) under the terms of separate Landowner Agreements. The Developer acknowledges the Water Credits may be obtained by more than one Landowner and from more than one site.

7.1.2. use all reasonable endeavours to coordinate the signing of necessary Statutory Agreements between the Developer and the Landowner(s).

7.1.3. submit documentation reasonably required by the Relevant Authority confirming that the Water Offsetting Solution is established and functioning.

7.1.4. provide a detailed report outlining the Water Offsetting Solution for the Developer's water neutrality statement.

7.1.5. use reasonable endeavours to assist the Developer on matters relating to the Water Offset Solution throughout the planning process.

8. Developer's Obligations

8.1. The Developer agrees to only use the Water Credits at the Development Site and in compliance with a Planning Permission and any associated Statutory Agreements.

8.2. The Developer agrees to collaborate fully with the Seller and Landowner(s) to ensure the successful implementation of this agreement. This includes providing all documentation and information reasonably requested to facilitate the process.

8.3. The Developer will provide planning reference numbers to the Seller within seven working days of each Planning Application's validation by the Relevant Authority.

8.4. The Developer will not contact or attempt to contact the Landowner without the Seller's prior written consent.

8.5. The Developer will procure at their own expense all necessary water reports to be provided in support of each Planning Application other than the Water Offsetting Solution.

8.6. The Developer acknowledges and agrees that they are solely responsible for all fees, costs, and expenses incurred in connection with this agreement and the purchase of Water Credits, including but not limited to:

8.6.1. fees charged to the Developer, Seller or Landowner(s) by local authorities, planning bodies, or other regulatory agencies.

8.6.2. legal fees and expenses incurred by the Developer, the Seller, and Landowner(s) in relation to this agreement, Statutory Agreements, transfer of Water Credits, or any associated disputes,

and such fees shall be payable on demand.

8.7. Neither the Seller nor the Landowner shall not be liable for, and the Developer hereby indemnifies the Seller and the Landowner(s) against, any of the fees, costs, or expenses outlines in clause 8.5, or in accordance with the terms of this agreement.

9. Confidentiality

9.1. "**Confidential Information**" includes any and all information disclosed or obtained relating to the Seller, Developer or Landowner by either of them to the other, whether in writing, orally, or by any other means, including but not limited to:

9.1.1. the terms of this agreement

9.1.2. Planning Applications, drawings, plans, and supporting documents related to the Development Site

9.1.3. details of the Water Offsetting Solution

9.1.4. financial and/or personal information of the Seller, Developer, or Landowner(s).

9.2. Information will not be considered Confidential Information if it:

9.2.1. was already in the receiving party's possession without confidentiality obligations.

is or becomes public knowledge through no fault of the receiving party.

9.2.2. is rightfully obtained from a third party without confidentiality restrictions.

9.2.3. is required to be disclosed by law, regulation, or court order (provided the receiving party gives the disclosing party prompt notice to allow them to seek a protective order).

9.3. Each party agrees to:

9.3.1. hold Confidential Information in strict confidence.

9.3.2. use Confidential Information solely for the purposes of fulfilling this agreement.

9.3.3. restrict disclosure of Confidential Information to employees, representatives, or advisors with a need to know, and who are bound by similar confidentiality obligations.

9.4. The obligations and restrictions in this clause 9 shall survive termination or expiry of this agreement for a period of 5 years.

10. Assignment

10.1. The Developer cannot transfer (assign) their rights or obligations under this agreement to another party without the Seller's prior written consent. The Seller cannot unreasonably withhold this consent but shall be entitled to charge reasonable fees to facilitate the assignment and recover all expenses and costs, including time spent.

10.2. Any assignment is strictly subject to all costs and expenses owing to the Seller, including cost in accordance with this agreement.

11. Grant of Exclusive License and Warranty of Title

11.1. Upon full payment of the Water Credit Payment by the Developer, the Seller hereby grants to the Developer an exclusive, irrevocable license (the "License") to use the Water Credits purchased in accordance with this agreement solely for the Development Site.

11.2. The Seller warrants and represents:

11.2.1. the Seller has the full right, power, and authority to grant the License to the Developer.

11.2.2. The use of the Water Credits by the Developer in accordance with this agreement will not infringe upon any third-party rights.

11.3. The Developer agrees to:

11.3.1. use the Water Credits solely for the Development Site and in strict compliance with all applicable laws, regulations, and Statutory Agreements.

11.3.2. hold the Seller harmless from and against any claims, losses, damages, or liabilities arising from the Developer's use of the Water Credits, except to the extent such claims, losses, damages, or liabilities are caused by a breach of the Seller's warranties under clause 11.2

12. Limitation of Liability

12.1. The Seller's total liability (including that of its employees, agents, or subcontractors) arising from or related to this agreement, regardless of the cause of action, shall not

exceed the Option Fee paid by the Developer under this agreement.

12.2. In no event shall the Seller be liable to the Developer for any indirect, special, incidental, consequential, or punitive damages. This includes, but is not limited to, lost profits, loss of use, or damage to reputation arising out of this agreement, even if the Seller was aware of the possibility of such damages.

12.3. These liability limitations shall not apply to:

12.3.1. the Seller's gross negligence or wilful misconduct.

12.3.2. claims required to be excluded by law.

13. Force Majeure

13.1. "**Force Majeure Event**" means an event or circumstance beyond the reasonable control of a party, which prevents or delays that party from performing its obligations under this agreement. This includes, but is not limited to:

13.1.1. natural disasters including floods, earthquakes, hurricanes, or similar.

13.1.2. war, terrorism, civil unrest, or riots.

13.1.3. Government restrictions or actions.

13.1.4. strikes or labour disputes (excluding those specific to the affected party).

13.1.5. epidemics or pandemics.

13.2. If a Force Majeure Event occurs, the affected party will be excused from performing its obligations under this agreement for the duration of the event, provided that the affected party:

13.2.1. gives prompt written notice of the Force Majeure Event to the other party;

13.2.2. uses reasonable efforts to mitigate the effects of the event.

13.3. As soon as reasonably possible after the Force Majeure Event has ended, subject to clause 14.3, the affected party shall resume its performance under this agreement.

14. Termination

14.1. Either party may terminate this agreement if the other party commits a material breach and fails to cure such breach within 10 days of receiving written notice detailing the breach.

14.2. The Developer may terminate this agreement at any time for convenience by providing the Seller with [10] days' prior written notice. In such a case, the Option Fee shall be retained by the Seller.

14.3. Should a Force Majeure Event prevent either party from fulfilling their obligations for a continuous period exceeding [28] days, either party may terminate this agreement by providing written notice to the other party.

14.4. Upon proper termination of this agreement the parties are released from any further liability under it, but without canceling or affecting any liability for a breach of this agreement arising before it has ended.

15. Disputes

15.1. Any dispute arising under this agreement, which cannot be resolved amicably between the parties, shall be settled by binding arbitration.

15.2. The arbitration shall be conducted in English, at a mutually agreed location, in accordance with the rules of the Royal Institution of Chartered Surveyors (RICS).

15.3. Parties may seek temporary or preliminary injunctive relief from a court of competent

jurisdiction, if necessary, while arbitration proceedings are pending.

15.4. The arbitral award shall be final and binding on both parties. Both parties waive any right to appeal the award in court.

16. Notices

16.1. Any notice required to be given under this agreement must be in writing and is valid only if:

16.1.1. it is given by hand or sent by special or recorded delivery; and

16.1.2. it is served on the recipient at the address of that party shown in this agreement in the United Kingdom or such other address for service in the United Kingdom specified in a notice given by the recipient to the other party.

17. Third Parties

Unless expressly stated, nothing in this agreement confers any right on any person pursuant to the Contracts (Rights of Third Parties) Act 1999.

18. Governing law and Jurisdiction

18.1. This agreement and any dispute or claim arising out of or in connection with it, its subject matter or its formation (including any non-contractual dispute or claim) is governed by, and must be construed in accordance with, the laws of England and Wales.

18.2. The courts of England and Wales have exclusive jurisdiction to settle any dispute or claim arising out of, or in connection with, this agreement, its subject matter or its formation (including non-contractual disputes or claims).

Signed by the parties on the date set out at the start of this agreement.

Anthony Grocott

Anthony Grocott (Jul 16, 2024 10:20 GMT+1)

Seller

Anthony Grocott

Print Name

Kevin Shaw

Developer

Kevin Shaw

Print Name

Thistledown Cottage _ Anthony Grocott - Developer -Sussex Water Neutrality Contract (2)

Final Audit Report 2024-07-16

Created:	2024-07-15
By:	Kevin Shaw (kevin@sussexwaterneutrality.co.uk)
Status:	Signed
Transaction ID:	CBJCHBCAABAAK_sP3sPLuIGFCYYqiub09lvb1Odoi3nj

"Thistledown Cottage _ Anthony Grocott - Developer -Sussex Water Neutrality Contract (2)" History

Document created by Kevin Shaw (kevin@sussexwaterneutrality.co.uk)
2024-07-15 - 14:50:58 GMT

Document emailed to Anthony Grocott (anthony.grocott@yahoo.co.uk) for signature
2024-07-15 - 14:51:02 GMT

Email viewed by Anthony Grocott (anthony.grocott@yahoo.co.uk)
2024-07-16 - 09:20:08 GMT

Document e-signed by Anthony Grocott (anthony.grocott@yahoo.co.uk)
Signature Date: 2024-07-16 - 09:20:33 GMT - Time Source: server

Document emailed to Kevin Shaw (kevin@sussexwaterneutrality.co.uk) for signature
2024-07-16 - 09:20:35 GMT

Email viewed by Kevin Shaw (kevin@sussexwaterneutrality.co.uk)
2024-07-16 - 09:21:24 GMT

Document e-signed by Kevin Shaw (kevin@sussexwaterneutrality.co.uk)
Signature Date: 2024-07-16 - 09:24:24 GMT - Time Source: server

Agreement completed.
2024-07-16 - 09:24:24 GMT

8.6 Appendix F:

Water offsetting report.

Water Neutrality Offsetting Report

Site: Thistledown Cottage, Harbolets Road, West Chiltington
Prepared by: Neil Jaques
Approved by: Neil Jaques
Date: 16 September 2024

motion
84 North Street
Guildford
GU1 4AU

Tel: 01483 531300
www.motion.co.uk

1.0 Introduction

1.1 This report has been created to set out the proposed offsetting measures for the site at Thistledown Cottage, Harbolets Road, West Chiltington.

1.2 The NE Position Statement states that offsetting can be carried out by retrofitting existing properties with grey water recycling systems, rainwater harvesting and/or water reduction fittings.

1.3 The proposal is to offset the development against a water offsetting scheme in Crawley. A summary of the offsetting scheme can be seen in **Appendix A**. 40 Caburn Heights, Crawley (RH11 8QX) will be used to offset this development.

2.0 Offsetting Measures

2.1 40 Caburn Heights is a six-bedroom property with a maximum population of six people. Within the HMO there are two kitchen spaces, one kitchen used by three occupants and another kitchen used by the other three occupants. The bathrooms are split between the bedrooms. This means that one bathroom (Bathroom One) will be used by three of the occupants and the second bathroom (Bathroom Two) will be used by three other occupants.

Flow Survey

2.2 A flow survey was undertaken in April 2024 to determine the existing water usage of 40 Caburn Heights. A copy of the flow survey can be found in **Appendix B**.

2.3 Noting how the kitchens and bathrooms are used, the Part G calculation has been split into two. A Part G calculation for the water use by the first three occupants and a Part G calculation for the water use by the other three occupants. They all use the communal washing machine, therefore this will be the same across the calculations.

2.4 A Part G calculation following the flow survey on Bathroom One gives a water consumption of 145.78 litres per person per day, which includes an allowance of 5 litres per person per day for external water usage. This equates to 437.33 litres per day with a population of three.

2.5 A Part G calculation following the flow survey on Bathroom Two gives a water consumption of 146.07 litres per person per day, which includes an allowance of 5 litres per person per day for external water usage. This equates to 438.20 litres per day with a population of three. A copy of the Part G calculations for each bathroom can be found in **Appendix C**.

2.6 Following the flow survey, the total water consumption at 40 Caburn Heights is 875.53 litres per day

Water Reduction Measures

2.7 Flow restricting valves will be fitted to all basin taps and kitchen taps within the property to reduce the water consumption. The shower in Bathroom One and Two will be fitted with a flow restricting valve and the bath in Bathroom Two will be disconnected so that it will act as a shower tray.

2.8 A water calculation in accordance with Building Regulations Part G has been carried out and this confirms that the water use of the occupants using Bathrooms One can be reduced to 91.19 litres per person per day, which includes an allowance of 5 litres per person per day for external water usage. A copy of the Part G calculation can be found in **Appendix D** and is summarised in Table 6.1 below:

Fixture	Capacity/Flow Rate	Water Usage (l/p/day)
WC (Dual Flush)	6.0	8.76
WC (Dual Flush) Part	3.0	8.88
Taps (excluding kitchen)	3.5	7.11
Shower (where bath present)	8.0	44.80
Kitchen Sink	5.0	12.56
Washing Machine	6.00	12.60
	Total	94.71
	Normalisation Factor	0.91
	Total	86.19
	External Water Use	5.00
	Total	91.19

Table 6.1 – Offsetting Water Usage: Bathroom One

2.9 Using the Part G water consumption of 91.19 litres per person per day and a population of three, it is estimated that the water usage of Bathroom One will reduce to 273.56 litres per day.

2.10 A water calculation in accordance with Building Regulations Part G has been carried out and this confirms that the water use of the occupants using Bathroom Two can be reduced to 91.19 litres per person per day, which includes an allowance of 5 litres per person per day for external water usage. A copy of the Part G calculation can be found in **Appendix D** and is summarised in Table 6.2 below:

Fixture	Capacity/Flow Rate	Water Usage (l/p/day)
WC (Dual Flush)	6.0	8.76
WC (Dual Flush) Part	3.0	8.88
Taps (excluding kitchen)	3.5	7.11
Shower (where bath present)	8.0	22.40
Kitchen Sink	5.0	12.56
Washing Machine	6.00	12.60
	Total	94.71
	Normalisation Factor	0.91
	Total	86.19
	External Water Use	5.00
	Total	91.19

Table 6.2 – Offsetting Water Usage: Bathroom Two

2.11 Using the Part G water consumption of 91.19 litres per person per day and a population of four, it is estimated that the water usage of Bathroom Two will reduce to 273.56 litres per day.

2.12 A copy of the flow restricting valves to achieve the above water consumptions can be found in **Appendix E**.

2.13 Following the installation of the flow restricting valves at 40 Caburn Heights the total water consumption can be reduce to 547.12 litres per day.

Summary of Offsetting

2.14 40 Caburn Heights, baseline water usage was 875.53 litres per day, following the incorporation of the above measures the water usage will be reduced to 547.12 litres per day. This will provide 328.42 litres per day to offset the water use of other proposed developments to ensure they remain water neutral.

2.15 One litre of water per day is equal to one credit.

2.16 It is understood that the development at Thistledown Cottage requires 305 credits to remain water neutral and these credits will be purchased from the offsetting scheme at 40 Caburn Heights. The remaining 23.42 credits will remain in the credit scheme for use on other proposed developments.

Appendix A

Sussex Water Neutrality Offsetting Scheme Summary

SUSSEX WATER NEUTRALITY

Sussex Water Neutrality: Water Credits for Sustainable Development

Introduction to Sussex Water Neutrality (SWN)

- **Who We Are:** A premier provider specialising in securing and selling water credits to developers engaged in new constructions within water-stressed areas of West Sussex.

Our Expertise: Leveraging over 25 years in the local property market, facilitating sustainable development through innovative water neutrality solutions.







Understanding Water Credits

What Are Water Credits? Units that represent a daily reduction of one litre in water usage, recognised by relevant authorities to satisfy water neutrality in development projects.

Why Water Credits? Essential for developers to meet stringent environmental regulations and ensure their projects contribute positively to water sustainability.



Our Services...

Water Credit Procurement: We secure water credits from various landowners with verified water savings, ensuring a reliable supply for your development needs.

Option to Purchase: Developers are given the option to purchase the necessary credits, safeguarding their development approval process.







Option Fee and Pricing Structure

Option Fee: 35% of the total water credit cost is required upfront as an option fee to secure the exclusive right to purchase specified water credits within the option period.

Cost of Water Credits: £69 per unit, plus VAT. This price is inclusive of the **35% option fee** already paid, ensuring transparent and straightforward financial planning for developers.

Option Period: 18 months, with the possibility to extend under specific conditions, providing flexibility in your project timelines.

Benefits of Choosing SWN

Compliance with Local Regulations: Our credits comply fully with local planning permissions and statutory agreements.

Flexibility: The structured option period and potential for extension accommodate various project timelines and planning stages.

Expert Support: Full support in planning applications, including necessary documentation and coordination with landowners for water offset solutions.



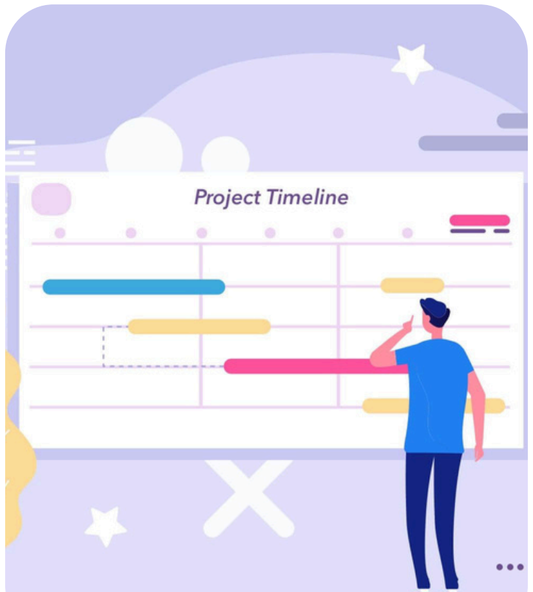



The Process

Initial Consultation:
Understanding your development needs and the scale of water neutrality required.

Secure the Option:
Pay the option fee, which is part of the total cost of the water credits.

Planning and Implementation:
Assist in the planning application and implement the water offset solution.

Exercise the Option:
Complete the purchase of credits upon obtaining planning permission or entering into statutory agreements.









Why Developers Trust Us

Proven Track Record: Successfully provided water neutrality solutions across multiple projects.

Reliability: Guaranteed availability of credits through established agreements with multiple landowners.

Cost-Effectiveness: Transparent and all-inclusive pricing simplifies budgeting and financial planning for your projects.







Time to reach out....

- **Contact Us:** Start securing your water credits today to ensure your project meets all regulatory requirements.
- **Learn More:** Visit our website for more information on how our water credits can facilitate your development goals.

Kevin Shaw - 07872518110

Kevin@sussexwaterneutrality.co.uk

www.sussexwaterneutrality.co.uk



Appendix B

Flow Survey

Residential Flow Survey

23 Apr 2024 / Kevin Shaw @ 40 Caburn Heights

Complete

Score	14 / 14 (100%)	Flagged items	0	Actions	0

Site conducted	40 Caburn Heights, Crawley, RH11 8QX
Conducted on	23.04.2024 14:09 BST
Prepared by	Kevin Shaw @ 40 Caburn Heights
Location	40 Caburn Heights Crawley England RH11 8QX United Kingdom (51.10481538269468, -0.19669830264006113)
Water Meter Reading	
Type of Property	Flat
Number of bedrooms	6

Untitled Page	13 / 13 (100%)
Kitchen 1	2 / 2 (100%)
- Sink Taps - litres/minute VIDEO REQUIRED	Mixer 17Lpm
9EC972FA-6126-40D0-9353-FDC18F29CBD7-video.mov	
- Washing Machine Make & Model - litres/kg dry load PHOTO REQUIRED	No
- Dishwasher Make & Model - litres/place setting PHOTO REQUIRED	No
Utility Room/Kitchen 2	
Is there a utility room/second kitchen?	Yes
2 tenants use this kitchen	
- Washing Machine Make & Model - litres/kg dry load PHOTO REQUIRED	Yes
- Sink Taps - litres/minute VIDEO REQUIRED	Mixer 19Lpm
E13646B4-ADBC-4890-8898-116E9F274FA8-video.mov	
WC	1 / 1 (100%)
Is there a WC?	Yes
- Basin Taps - litres/minute VIDEO REQUIRED	Mixer 8Lpm
7F041F88-1BE4-4191-AE86-22989B339F97-video.mov	
- WC - litres PHOTO REQUIRED	Dual Flush
 Photo 1	
Bathroom 1	2 / 2 (100%)
- Shower Make/Model - litres/minute VIDEO REQUIRED	Thermostatic mixer 16.5Lpm
3 tenants use this bathroom	
10AF1782-D607-49D1-8070-B4B7DDBCCB3F-video.mov	
- Basin Taps - litres/minute VIDEO REQUIRED	Mixer tap 8Lpm
030EDE54-48B4-464C-901B-A242D0B7C855-video.mov	

- WC - litres PHOTO REQUIRED	Dual Flush



Photo 2

Is there a bath?	No
- Bathroom 2	1 / 1 (100%)
Is there an additional bathroom?	Yes

3 tenants use this bathroom

- Basin Taps - litres/minute VIDEO REQUIRED	Mixer 8Lpm

C65B4926-386C-4C4B-BA66-F3E003523AE7-video.mov

- Shower - litres/minute VIDEO REQUIRED	Thermostatic Mixer 15Lpm

B55CA421-D026-48DA-B33B-573B4B79CF34-video.mov

- WC - litres PHOTO REQUIRED	Dual Flush



Photo 3

Is there a bath?	Yes
- Bath and Taps - Measure Bath and litres/minute VIDEO REQUIRED	L1400 W550 D310 (to overflow)

Plan to remove bath



Photo 4

Bathroom 3	2 / 2 (100%)
Is there an additional bathroom?	No
Is there a bath?	No
Bathroom 4	2 / 2 (100%)

Is there an additional bathroom?	No
Is there a bath?	No
Bathroom 5	2 / 2 (100%)
Is there an additional bathroom?	No
Is there a bath?	No
- Bath and Taps - Measure Bath and litres/minute VIDEO REQUIRED	
Other Water uses	1 / 1 (100%)
Are there any other water uses?	No

Media summary



Photo 1



Photo 2

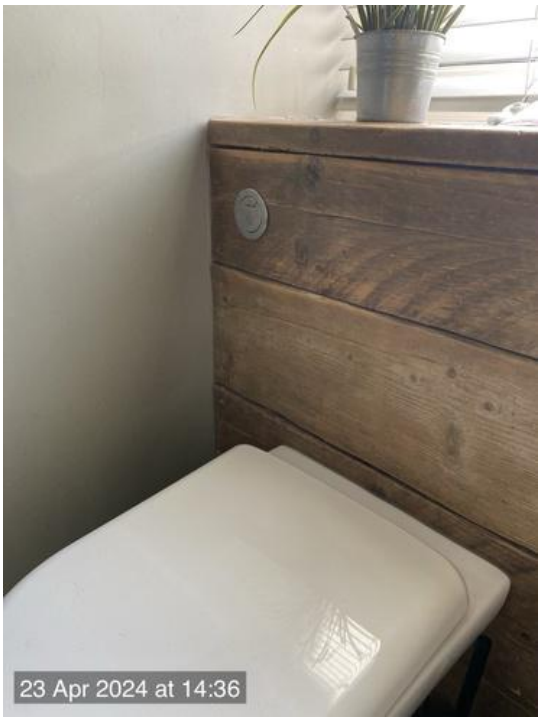

Photo 3

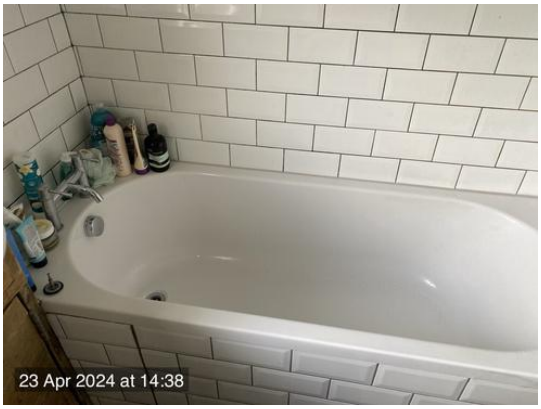

Photo 4

File summary

9EC972FA-6126-40D0-9353-FDC18F29CBD7-video.mov
E13646B4-ADBC-4890-8898-116E9F274FA8-video.mov
7F041F88-1BE4-4191-AE86-22989B339F97-video.mov
10AF1782-D607-49D1-8070-B4B7DDBCCB3F-video.mov

030EDE54-48B4-464C-901B-A242D0B7C855-video.mov
C65B4926-386C-4C4B-BA66-F3E003523AE7-video.mov
B55CA421-D026-48DA-B33B-573B4B79CF34-video.mov

Appendix C

Part G Calculation: Flow Survey

Part G Calculation - 40 Caburn Heights (Flow Survey)

Bathroom 1

Fixture	Capacity/Flow Rate	Use Factor	Fixed Use	litres/person/ day
WC (Single Flush)		4.42		0.00
WC (Dual Flush)	6	1.46		8.76
WC (Dual Flush) Part	3	2.96		8.88
Taps (excluding kitchen)	8	1.58	1.58	14.22
Bath (where shower present)		0.11		0.00
Shower (where bath present)		4.37		0.00
Bath Only		0.5		0.00
Shower Only	16.5	5.6		92.40
Kitchen Sink	17	0.44	10.36	17.84
Washing Machine	6.00	2.1		12.60
Dishwasher		3.6		0.00
	Total calculated use (litres/person/day)			154.70
Normalisation Factor				0.91
Total Water Consumption (CSH) (litres/person/day)				140.78
External Water Use				5.00
Total Water Consumption (Part G) (litres/person/day)				145.78

	Number of Units	Census	Population	Mains Water Usage
6-bedroom	1	3	3	437.33
Totals	1		3	437.33

Part G Calculation - 40 Caburn Heights (Flow Survey)

Bathroom 2

Fixture	Capacity/Flow Rate	Use Factor	Fixed Use	litres/person/ day
WC (Single Flush)		4.42		0.00
WC (Dual Flush)	6	1.46		8.76
WC (Dual Flush) Part	3	2.96		8.88
Taps (excluding kitchen)	8	1.58	1.58	14.22
Bath (where shower present)	239	0.11		26.29
Shower (where bath present)	15	4.37		65.55
Bath Only		0.5		0.00
Shower Only		5.6		0.00
Kitchen Sink	19	0.44	10.36	18.72
Washing Machine	6.00	2.1		12.60
Dishwasher		3.6		0.00
	Total calculated use (litres/person/day)			155.02
Normalisation Factor				0.91
Total Water Consumption (CSH) (litres/person/day)				141.07
External Water Use				5.00
Total Water Consumption (Part G) (litres/person/day)				146.07

	Number of Units	Census	Population	Mains Water Usage
6-bedroom	1	3	3	438.20
Totals	1		3	438.20

Appendix D

Part G Calculation: Retrofit

Part G Calculation - 40 Caburn Heights (Flow Restricting Valves)

Bathroom 1

Fixture	Capacity/Flow Rate	Use Factor	Fixed Use	litres/person /day
WC (Single Flush)		4.42		0.00
WC (Dual Flush)	6	1.46		8.76
WC (Dual Flush) Part	3	2.96		8.88
Taps (excluding kitchen)	3.5	1.58	1.58	7.11
Bath (where shower present)		0.11		0.00
Shower (where bath present)		4.37		0.00
Bath Only		0.5		0.00
Shower Only	8	5.6		44.80
Kitchen Sink	5	0.44	10.36	12.56
Washing Machine	6.00	2.1		12.60
Dishwasher		3.6		0.00
	Total calculated use (litres/person/day)			94.71
Normalisation Factor				0.91
Total Water Consumption (CSH) (litres/person/day)				86.19
External Water Use				5.00
Total Water Consumption (Part G) (litres/person/day)				91.19

	Number of Units	Census	Population	Mains Water Usage
6-bedroom	1	3	3	273.56
Totals	1		3	273.56

Part G Calculation - 40 Caburn Heights (Flow Restricting Valves)

Fixture	Capacity/Flow Rate	Use Factor	Fixed Use	litres/person /day
WC (Single Flush)		4.42		0.00
WC (Dual Flush)	6	1.46		8.76
WC (Dual Flush) Part	3	2.96		8.88
Taps (excluding kitchen)	3.5	1.58	1.58	7.11
Bath (where shower present)		0.11		0.00
Shower (where bath present)		4.37		0.00
Bath Only		0.5		0.00
Shower Only	8	5.6		44.80
Kitchen Sink	5	0.44	10.36	12.56
Washing Machine	6.00	2.1		12.60
Dishwasher		3.6		0.00
	Total calculated use (litres/person/day)			94.71
Normalisation Factor				0.91
Total Water Consumption (CSH) (litres/person/day)				86.19
External Water Use				5.00
Total Water Consumption (Part G) (litres/person/day)				91.19

	Number of Units	Census	Population	Mains Water Usage
6-bedroom	1	3	3	273.56
Totals	1		3	273.56

Appendix E

Fixtures and Fittings Specifications: Retrofit

Fixtures and Fittings - Part G Specifications

Item	Capacity/Flow rate	Overview
Basin Tap	3.5 litres/minute	Flow Restricting Valve
Shower	8 litres/minute	Flow Restricting Valve
Kitchen Sink	5 litres/minute	Flow Restricting Valve