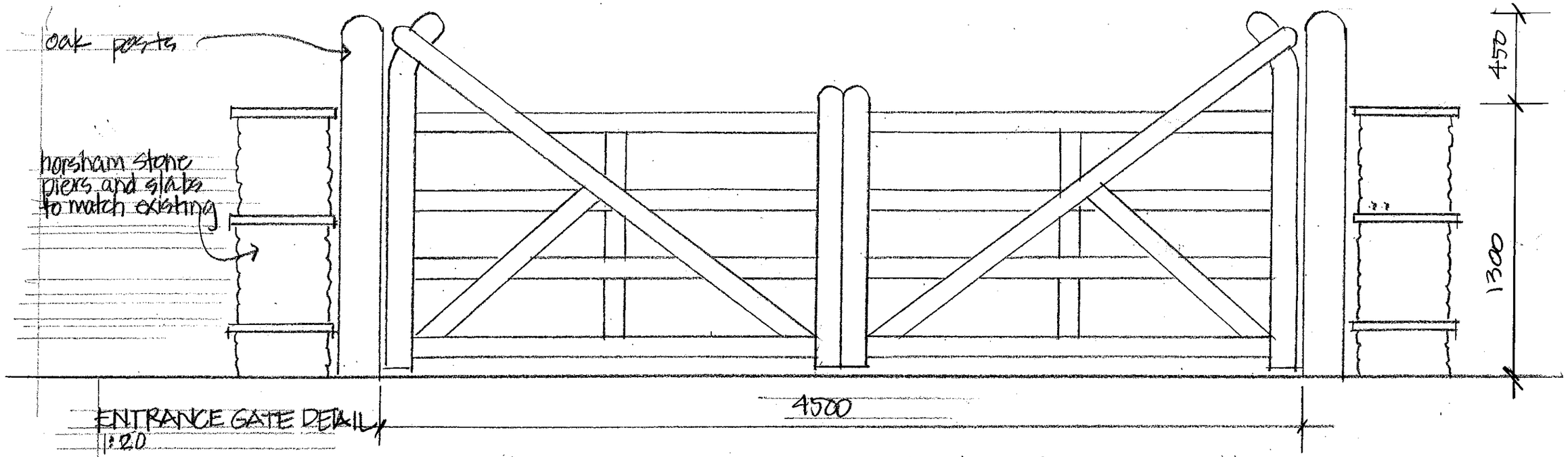

ENTRANCE GATE DETAIL
1:20

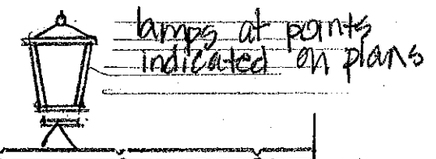

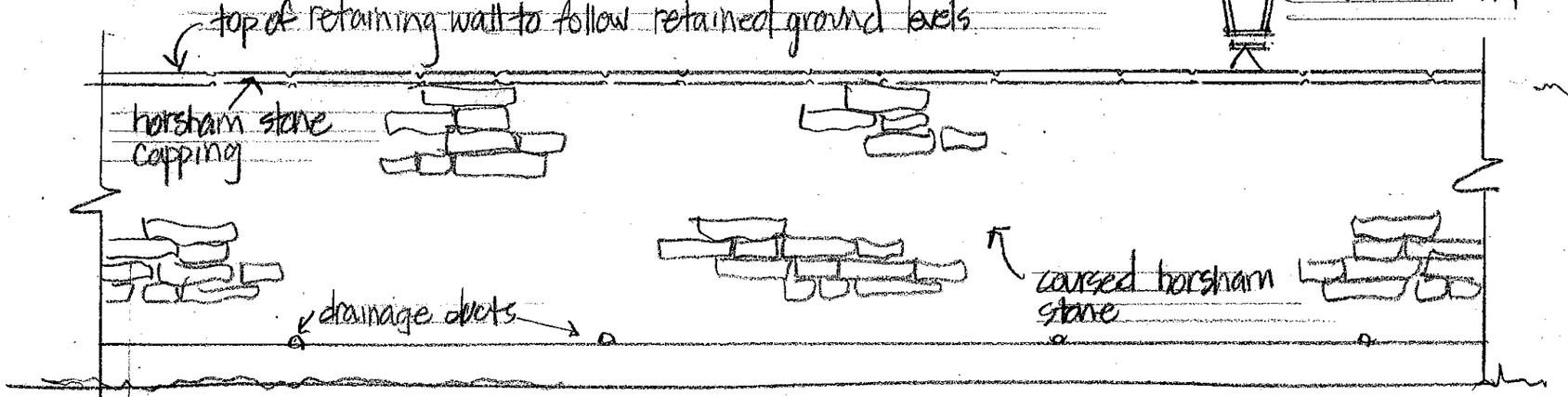

RETAINING WALL DETAILS - ELEVATION AND SECTION
1:20

0 .2 .4 .6 .8 1.0 1.2 1.4 1.6 1.8 2M

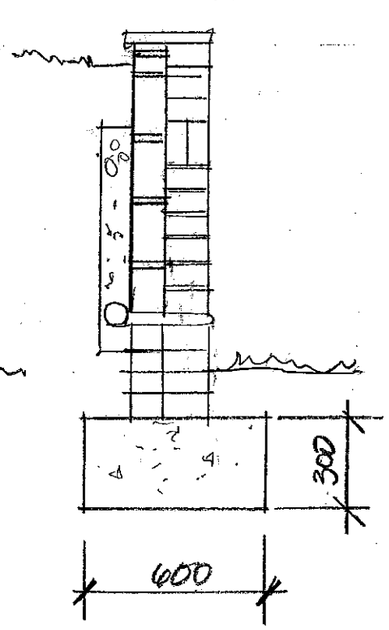

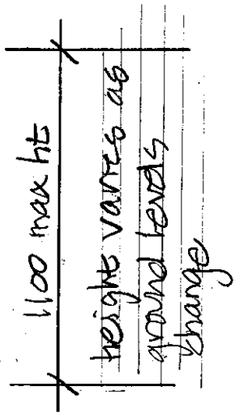

Porch, entrance gates, and driveway and drainage repair and improvements
DURFOLD, DORKING RD, WARNHAM, W SUSSEX RH12 3RY drwg 3003/4A

Rev A scale adjusted 23.7.25

JAYE FORD
ARCHITECTURE LTD

MANLEYS
MANLEYS HILL
STORRINGTON
WEST SUSSEX RH20 4BT
TEL: 01903 745393
EMAIL: jayefordarch@gmail.com