CRADDYS

SuDS VERIFICATION REPORT

FOR

ALDI STORE, TANBRIDGE RETAIL PARK, HORSHAM

CLIENT
ALDI STORES LTD

AUTHOR
CRADDYS

63 MACRAE ROAD
EDEN OFFICE PARK
HAM GREEN
BRISTOL
BS20 0DD

PHONE: 01275 371333
E-MAIL: Max.Bowyer@Craddys.co.uk

DATE: NOVEMBER 2024
CRADDYS DOCUMENT REFERENCE: 11787w0017

CONTENTS

1. INTRODUCTION 3
2. DESCRIPTION OF THE PROJECT 3
3. SURFACE WATER DRAINAGE SYSTEM COMPONENTS 3
4. VERIFICATION EVIDENCE 4
5. DRAINAGE VERIFICATION CHECK 4
6. OPERATION & MAINTENANCE MANUAL 4
7. CONCLUSION 4

Appendix A -Site Plan
Appendix B -Drainage Layout & Details
Appendix C -Drainage Installation Photos
Appendix D -Drainage CCTV Survey
Appendix E -Drainage O&M Manual
Appendix F -Terms of Business

Revision	Date	Notes	Author	Checked	Approved
A	04.11.24	1st Issue	MTB	AST	RAG

1. INTRODUCTION

1.1. Background to report

The planning permission number DC/21/1413 included condition 14 relating to the verification of the surface water drainage system features and reads as follows:

No part of the development hereby permitted shall be occupied until a verification report demonstrating that the SuDS drainage system has been constructed in accordance with the approved design drawings has been submitted to and approved by the Local Planning Authority. The development shall be maintained in accordance with the approved report.

Reason: To ensure a SuDS drainage system has been provided to an acceptable standard to the reduce risk of flooding, to improve and protect water quality, improve habitat and amenity, and ensure future maintenance in accordance Policies 35 and 38 of the Horsham District Planning Framework (2015).

1.2. This verification has therefore been written with the purpose of discharging the above planning condition.

2. DESCRIPTION OF THE PROJECT

2.1. Site Location

Tanbridge Retail Park, Horsham, RH12 1AJ.

2.2. Brief

The development consists of a new Aldi Store, including infrastructural works of access, parking, drainage and services.

3. SURFACE WATER DRAINAGE SYSTEM COMPONENTS

3.1. Site Plan

The site plan which can be found in Appendix A highlights the proposed landscaping for the site. This coincides with what was originally proposed.

3.2. SuDS and Drainage Features

A number of surface water drainage features are outlined below. For the As-Built Drainage Layout, please refer to Appendix B. The drainage features are not limited to below.

3.3. Car Park Drainage

Car park drainage consists of gullies and drainage channels serving hard standing areas, as well as permeable paving for as many parking bays as permitted, refer to Appendix B for the As-Built Drainage Layout and the Drainage Details.

3.4. Roof Drainage

The roof drainage will be channelled into the surface water drainage system through several rainwater pipes positioned around the store. This system will connect with the surface water from the hardstanding areas of the site tat do not need treatment. For details, please refer to Appendix B which contains the As-Built Drainage Layout.

3.5. Geocellular Attenuation

A 105m^3 storage (void) space Geocellular attenuation tank has been installed in order to provide storage for storm events up to and including the 1 in 100-year with a 25% allowance for climate change. Refer to Appendix B for the As-Built Drainage Layout and for the Drainage Details.

3.6. Oil Interceptor

A Klargester NSBP006 bypass oil interceptor has been installed prior to the attenuation in order to provide further treatment to the surface water that passes through it, reducing the risk of hydrocarbons discharging into the River Arun. Refer to Appendix B for the As-Built Drainage Layout and for the Drainage Details.

3.7. Pump Chamber

A package pump chamber has been installed with a peak flow rate of 35l/s due to the level requirements of the site and the outfall level of the existing watercourse. Refer to Appendix B for the As-Built Drainage Layout and for the Drainage Details.

3.8. Rainwater Harvesting Tank

A Klargester rainwater harvesting tank has been installed to collect and store water from sections of the roof , once the tank has reached capacity any additional surface water will be discharged downstream towards the watercourse. Refer to Appendix B for the As-Built Drainage Layout and for the Drainage Details.

4. VERIFICATION EVIDENCE

4.1. As-Built Drainage Layout

An as built drainage layout has been drawn based on an as installed drainage layout provided by the contractor with measured invert and cover levels. Refer to Appendix B for the As-Built Drainage Layout.

4.2. Photo Records

Photo records have been compiled during the construction of the surface water drainage, refer to Appendix C for said records.

4.3. As-Built Drainage CCTV Report

An As-Built CCTV survey was conducted to confirm the condition and size of the installed surface water drainage, as well as the depths of inlets and outlets within manholes and the materials the surface water drainage is constructed from. Refer to the foul and storm CCTV survey reports by Eko Construction in Appendix D.

5. DRAINAGE VERIFICATION CHECK

This section will cross reference as designed drainage with the drainage evidence that has been provided.

5.1. Car Park Drainage; Locations, Construction

To confirm the positions of the surface and foul wate drainage items, please refer to Appendix B for the As-Built Drainage Layout, and Appendix D for drainage CCTV surveys which confirm the condition of installed drainage. Pipes were shown to be free of cracking and water, at an appropriate gradient. Some cover levels increased As Built, however this is not expected to negatively impact the drainage.

5.2. Attenuation/ Interceptor Location, Size, Construction

The attenuation tank was constructer in the appropriate depth, area and location, refer to Appendix B for the As Built Drainage Layout. As shown in Appendix C from the site photos, the attenuation is tanked and ties into the pumping station.

6. OPERATION & MAINTENANCE MANUAL

6.1. For O&M Manual, see Appendix E.

7. CONCLUSION

It is concluded from this report that the drainage has been installed to the specification and arrangement set out by Craddys, while the as built condition of the drainage systems is satisfactory. This report therefore verifies the drainage is installed as designed by Craddys and as approved by Horsham District Council.

Report prepared by Craddys.

APPENDIX A
Site Plan

REV	DATE	DESCRIPTION	DRW	CHK
C01	24.10.2022	Tender Issue	PW	ROD
C02	15.11.2022	Tender Amendments: Spec of staff cycle shelter amended. External steps added to loading bay. Paving edge of resin bonded path confirmed. Extent of block paving updated to match engineer's proposals.	PW	ROD
C03	29.11.2022	Knee rail extended around cycle shelter enclosure. Extent of concrete ramp shown.	PW	ROD
C04	25.01.2023	Construction Issue: Permeable paving updated and cycle shelter setting out updated.	PW	ROD
C05	15.02.2023	Fire hydrant location confirmed.	PW	ROD

WAITROSE

EXISTING WAITROSE AND JOHN LEWIS AT HOME

NEW PROPOSED KERBS TO LINK INTO EXISTING KERBS EITHER SIDE OF ACCESS ROAD

EXISTING RETAINING WALL RETAINED

NEW PROPOSED TOTEM SIGNAGE, SUBJECT TO SEPARATE ADVERTISEMENT APPLICATION

NEW PROPOSED RAMP TO SITE

2.4M HIGH PALADIN FENCE TO BOUNDARY

THP's SUGGESTED LINE OF TREE ROOT PROTECTION AREA

HATCH DENOTES EXTENT OF PERMEABLE PAVING TO RELEVANT PARKING BAYS

NEW PROPOSED PEDESTRIAN RAMP

6No. x EXISTING TREES TO BE FELLED

2.4M HIGH PALADIN FENCE TO BOUNDARY

EXISTING RETAINING WALL RETAINED (INDICATIVELY SHOWN)

NOTE:
EXTERNAL FINISHES ARE IN ABEYANCE , SUBJECT TO APPROVAL BY THE LPA

RIVER ARUN

PROPOSED RAINWATER HARVESTING TANK (REFER TO ENGINEER'S DESIGN FOR FURTHER DETAILS)

BROXAP BXMW/AP APOLLO CYCLE SHELTER 2753(w) x 5000 (l) x 2150(h) FOR 12 (No.) CUSTOMER SPACES

EXTENT OF EXISTING RETAINING TO BE REMOVED WALL (INDICATIVELY SHOWN)

96 PARKING SPACES
(5 DDA, 9 PARENT & CHILD, 4 STAFF, 4 EV & 8 PASSIVE CHARGING)

PROPOSED LOCATION OF FUTURE DRS UNIT. FOUL DRAINAGE POP-UP TO BE CAPPED-OFF. DUCTS TO BE PROVIDED FOR:
- POWER (100mm dia.)
- DATA (100mm dia.)
- FIRE COMMS (100mm dia.)

ALBION WAY (B2237)

TIMBER KNEE RAIL TO THE TOP OF SLOPE TO PROTECT PLANTING

8 CUSTOMER CYCLE SPACES

EXISTING PUBLIC FOOTBRIDGE

NEW PEDESTRIAN ACCESS TO BE FORMED

NEW LINK FORMED TO EXISTING FOOT PATH

ALDI FOOD STORE
Retail Area = 1,315m2
GIA = 1,810m2

4 x STAFF SPACES

EXISTING TREES TO RIVER BANK BOUNDARY, ALL TO BE SIGNIFICANTLY CUT BACK

TOP OF CONCRETE LOADING RAMP

TIMBER KNEE RAIL TO RAMP TO PROTECT PLANTING

TIMBER KNEE RAIL TO REAR BOUNDARY

EXTERNAL STEPS WITH CYCLE TRACK TO ACCESS SHELTER AT HIGHER LEVEL

BROXAP PREMIER SECURITY CAGE CYCLE SHELTER 2080(w) x 4100 (l) x 2181(h) FOR 10 (No.) STAFF SPACES

RIVER ARUN

NEW DESIRE LINE PATH TO CROSSING RESIN BONDED GRAVEL

2m HIGH CLOSEBOARD FENCE TO FOLLOW LINE OF FOOTPATH. ACCESS GATES TO STAFF CYCLE STORE AREA

CROPPED GRANITE SETTS TO PAVING EDGE

RIGHT OF WAY EXISTING PUBLIC FOOTPATH ACCESS

WORTHING ROAD (B2237)

Fire Hydrant

TAN BRIDGE

Prewetts Mill

EXTERNAL WORKS KEY:

- PERMEABLE BLOCK PAVING: MARSHALLS DRIVELINE PRIORA (COLOUR: BRINDLE)
- RESIN BONDED GRAVEL PAVING: ADDAGRIP TERRABASE CLASSIC (COLOUR: TBC). PAVING EDGING TO BE MARSHALLS 110 x 110 x 100 FAIRSTONE CROPPED GRANITE SETTS
- BARK MULCH
- SS BOLLARDS TO SHOPFRONT
- HEAVY DUTY CONCRETE BOLLARD
- KNEE RAIL FENCING
- TACTILE PAVING (COLOUR: BUFF)

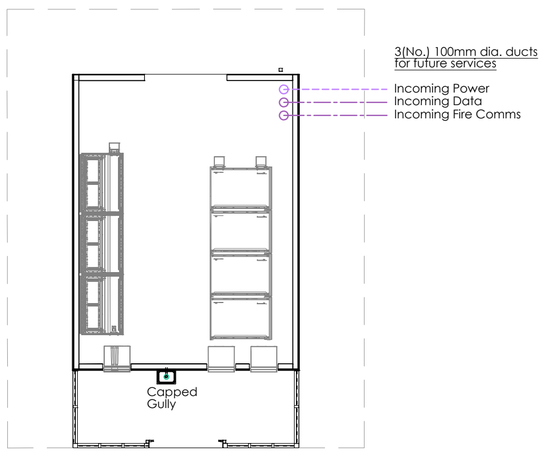

Future DRS Unit
1:100

CONTRACT DRAWING
Signed by Contractor

Date:
Signed by Employer

Date:

CONTRACT DRAWING

THE HARRIS GROUP LTD DOES NOT ACCEPT LIABILITY FOR ANY DEVIATION FROM OUR DRAWINGS OR SPECIFICATION

FOR STRUCTURAL DETAILS REFER TO THE CONSULTING STRUCTURAL & CIVIL ENGINEERING DETAILED DESIGN DRAWINGS & SPECIFICATION

NOTE:
ALL STRUCTURAL STEELWORK & SUBSTRUCTURE ELEMENTS ARE SHOWN INDICATIVE. PLEASE REFER TO STRUCTURAL ENGINEER'S INFORMATION FOR DESIGN INTENT. STRUCTURAL STEELWORK IS SUBJECT TO SPECIALIST SUBCONTRACTOR'S DESIGN & DETAIL. CONTRACTOR TO CONSIDER ALL SECONDARY STEELWORK FOR CLADDING SUPPORT, BLOCKWORK RESTRAINT AND BUILDING OPENINGS.

FOR M + E INFORMATION, REFER TO THE M & E ENGINEER'S AND SUB-CONTRACTOR'S DESIGN DRAWINGS & SPECIFICATION

THE HARRIS GROUP LTD DOES NOT ACCEPT LIABILITY FOR ANY COMPOSITE, INSULATION OR DECORATION PANELS

Client
Aldi Store Limited - Sheppey

Project Title
New Build Food Store

Project Address
Tanbridge Retail Park,
Worthing Road,
Horsham

Job No.	Originator	Zone	Level	Type	Role
2810	THP	XX	ZZ	DR	A

System Classification: Ac_25_20_88- Drawing No.: 205 | Suitability: A5 | Revision: C05

Drawn	Checked	Date	Scale	Size
AC	PAW	28/07/2022	1:250	A1

Drawing Title
Proposed Site Plan

THE HARRIS PARTNERSHIP WAKEFIELD
2 St. Johns North, Wakefield, WF1 3QA
t. 01924 291 800 f. 01924 290 072

THE HARRIS PARTNERSHIP MANCHESTER
2nd Floor, Carvers Warehouse,
77 Dale Street, Manchester, M1 2HG
t. 0161 238 8555 f. 0161 244 5809

THE HARRIS PARTNERSHIP MILTON KEYNES
The Old Rectory, 79 High Street
Newport Pagnell, MK16 8AB
t. 01908 211 577 f. 01908 211 722

THE HARRIS PARTNERSHIP READING
101 London Road, Reading, RG1 5BY
t. 0118 950 7700 f. 0118 956 8642

THE HARRIS PARTNERSHIP LONDON
10 GEES COURT, LONDON, W1U 1JJ
t. 020 7409 1215

THE HARRIS PARTNERSHIP ARCHITECTS
www.harrispartnership.com

CAD file reference CAD FILE REFERENCE

This drawing is copyright and may not be reproduced in whole or part without written authority. Do not scale off this drawing.

APPENDIX B
Drainage Layout & Details

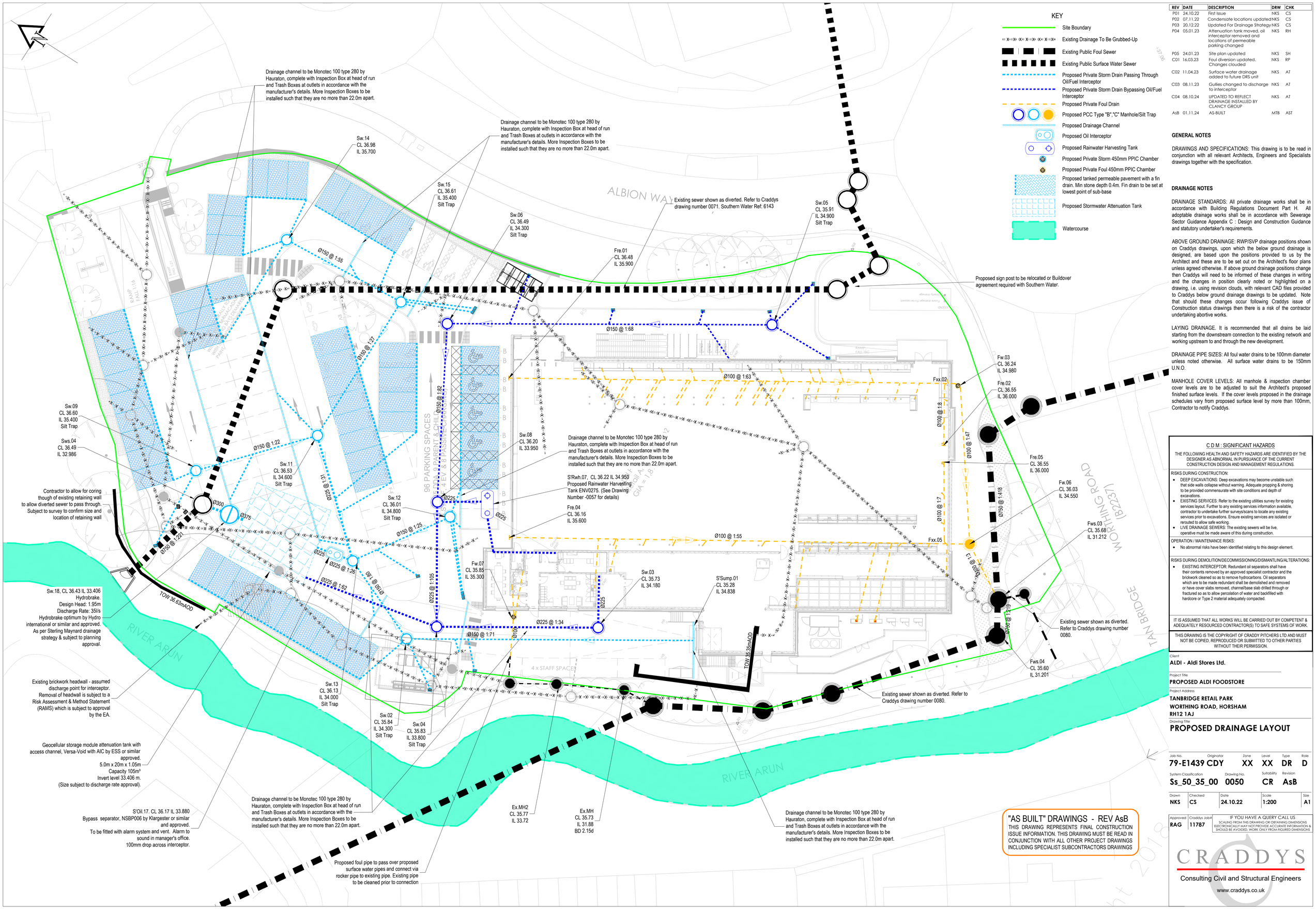

KEY

- Site Boundary
- Existing Drainage To Be Grubbed-Up
- Existing Public Foul Sewer
- Existing Public Surface Water Sewer
- Proposed Private Storm Drain Passing Through Oil/Fuel Interceptor
- Proposed Private Storm Drain Bypassing Oil/Fuel Interceptor
- Proposed Private Foul Drain
- Proposed PCC Type "B","C" Manhole/Silt Trap
- Proposed Drainage Channel
- Proposed Oil Interceptor
- Proposed Rainwater Harvesting Tank
- Proposed Private Storm 450mm PPIC Chamber
- Proposed Private Foul 450mm PPIC Chamber
- Proposed tanked permeable pavement with a fin drain. Min stone depth 0.4m. Fin drain to be set at lowest point of sub-base
- Proposed Stormwater Attenuation Tank
- Watercourse

REV	DATE	DESCRIPTION	DRW	CHK
P01	24.10.22	First Issue	NKS	CS
P02	07.11.22	Condensate locations updated	NKS	CS
P03	20.12.22	Updated For Drainage Strategy	NKS	CS
P04	05.01.23	Attenuation tank moved, oil interceptor removed and locations of permeable parking changed	NKS	RH
P05	24.01.23	Site plan updated	NKS	SH
C01	16.03.23	Foul diversion updated. Changes clouded	NKS	RP
C02	11.04.23	Surface water drainage added to future DRS unit	NKS	AT
C03	08.11.23	Gullies changed to discharge to interceptor	NKS	AT
C04	08.10.24	UPDATED TO REFLECT DRAINAGE INSTALLED BY CLANCY GROUP	NKS	AT
AsB	01.11.24	AS-BUILT	MTB	AST

GENERAL NOTES

DRAWINGS AND SPECIFICATIONS: This drawing is to be read in conjunction with all relevant Architects, Engineers and Specialists drawings together with the specification.

DRAINAGE NOTES

DRAINAGE STANDARDS: All private drainage works shall be in accordance with Building Regulations Document Part H. All adoptable drainage works shall be in accordance with Sewerage Sector Guidance Appendix C : Design and Construction Guidance and statutory undertaker's requirements.

ABOVE GROUND DRAINAGE: RWP/SVP drainage positions shown on Craddys drawings, upon which the below ground drainage is designed, are based upon the positions provided to us by the Architect and these are to be set out on the Architect's floor plans unless agreed otherwise. If above ground drainage positions change then Craddys will need to be informed of these changes in writing and the changes in position clearly noted or highlighted on a drawing, i.e. using revision clouds, with relevant CAD files provided to Craddys below ground drainage drawings to be updated. Note that should these changes occur following Craddys issue of Construction status drawings then there is a risk of the contractor undertaking abortive works.

LAYING DRAINAGE. It is recommended that all drains be laid starting from the downstream connection to the existing network and working upstream to and through the new development.

DRAINAGE PIPE SIZES: All foul water drains to be 100mm diameter unless noted otherwise. All surface water drains to be 150mm U.N.O.

MANHOLE COVER LEVELS: All manhole & inspection chamber cover levels are to be adjusted to suit the Architect's proposed finished surface levels. If the cover levels proposed in the drainage schedules vary from proposed surface level by more than 100mm, Contractor to notify Craddys.

C D M : SIGNIFICANT HAZARDS

THE FOLLOWING HEALTH AND SAFETY HAZARDS ARE IDENTIFIED BY THE DESIGNER AS ABNORMAL IN PURSUANCE OF THE CURRENT CONSTRUCTION DESIGN AND MANAGEMENT REGULATIONS.

RISKS DURING CONSTRUCTION:

- DEEP EXCAVATIONS: Deep excavations may become unstable such that side walls collapse without warning. Adequate propping & shoring to be provided commensurate with site conditions and depth of excavations.
- EXISTING SERVICES: Refer to the existing utilities survey for existing services layout. Further to any existing services information available, contractor to undertake further surveys/scans to locate any existing services prior to excavations. Ensure existing services are isolated or rerouted to allow safe working.
- LIVE DRAINAGE SEWERS: The existing sewers will be live, operative must be made aware of this during construction.

OPERATION / MAINTENANCE RISKS:

- No abnormal risks have been identified relating to this design element.

RISKS DURING DEMOLITION/DECOMMISSIONING/DISMANTLING/ALTERATIONS:

- EXISTING INTERCEPTOR: Redundant oil separators shall have their contents removed by an approved specialist contractor and the brickwork cleaned so as to remove hydrocarbons. Oil separators which are to be made redundant shall be demolished and removed or have cover slabs removed, channel/base slab drilled through or fractured so as to allow percolation of water and backfilled with hardcore or Type 2 material adequately compacted.

IT IS ASSUMED THAT ALL WORKS WILL BE CARRIED OUT BY COMPETENT & ADEQUATELY RESOURCED CONTRACTOR(S) TO SAFE SYSTEMS OF WORK.

THIS DRAWING IS THE COPYRIGHT OF CRADDY PITCHERS LTD AND MUST NOT BE COPIED, REPRODUCED OR SUBMITTED TO OTHER PARTIES WITHOUT THEIR PERMISSION.

Client
ALDI - Aldi Stores Ltd.

Project Title
PROPOSED ALDI FOODSTORE

Project Address
TANBRIDGE RETAIL PARK
WORTHING ROAD, HORSHAM
RH12 1AJ

Drawing Title
PROPOSED DRAINAGE LAYOUT

Job No.	Originator	Zone	Level	Type	Role
79-E1439	CDY	XX	XX	DR	D

System Classification	Drawing No.	Suitability	Revision
Ss_50_35_00	0050	CR	AsB

Drawn	Checked	Date	Scale	Size
NKS	CS	24.10.22	1:200	A1

Approved	Craddys Job#
RAG	11787

IF YOU HAVE A QUERY CALL US
SCALING FROM THIS DRAWING OR OBTAINING DIMENSIONS ELECTRONICALLY MAY NOT PROVIDE ACCURATE INFORMATION & SHOULD BE AVOIDED. WORK ONLY FROM FIGURED DIMENSIONS

"AS BUILT" DRAWINGS - REV AsB
THIS DRAWING REPRESENTS FINAL CONSTRUCTION ISSUE INFORMATION. THIS DRAWING MUST BE READ IN CONJUNCTION WITH ALL OTHER PROJECT DRAWINGS INCLUDING SPECIALIST SUBCONTRACTORS DRAWINGS

CRADDYS
Consulting Civil and Structural Engineers
www.craddys.co.uk

REV	DATE	DESCRIPTION	DRW	CHK
P01	24.10.22	INITIAL ISSUE	NKS	CS
C01	06.04.23	CONSTRUCTION ISSUE	NKS	CS
C02	08.10.24	FINAL CONSTRUCTION ISSUE	GW	CS
AsB	01.11.24	AS-BUILT	MTB	AST

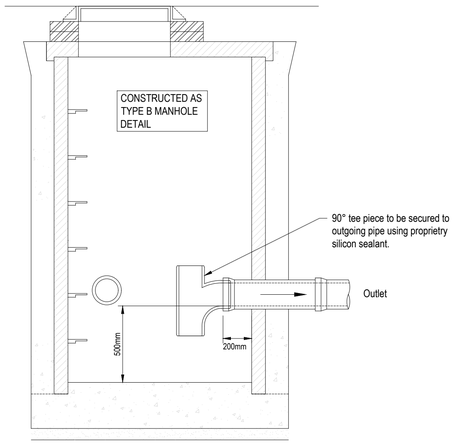

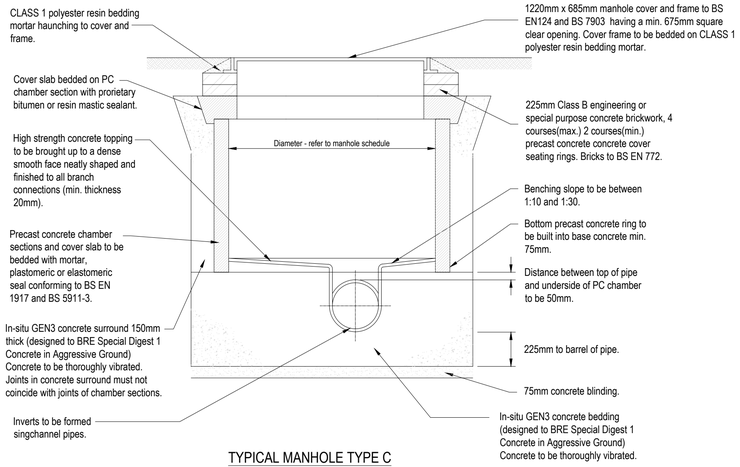

TYPICAL MANHOLE TYPE C
Scale 1:20

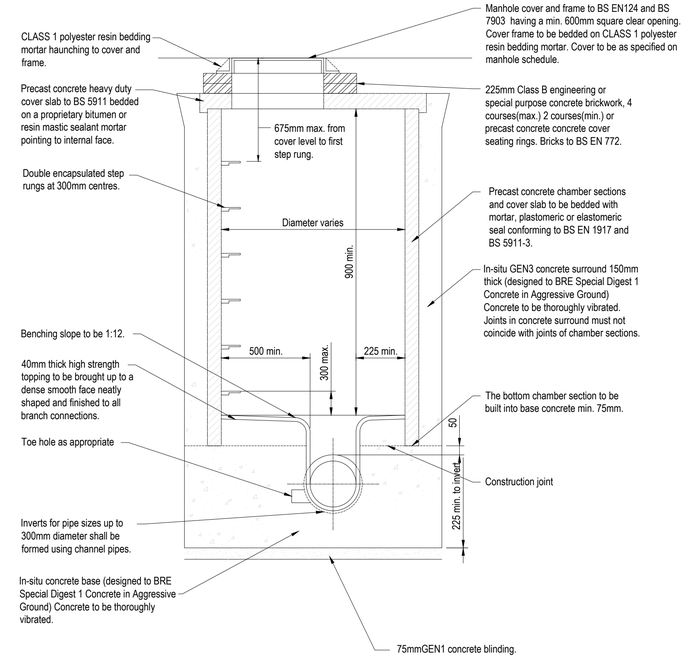

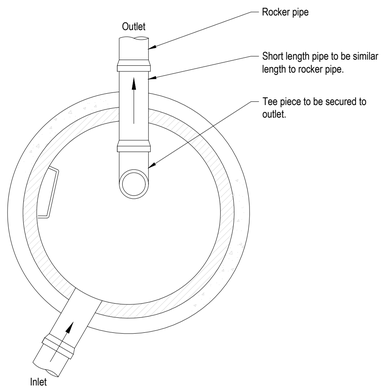

TYPICAL SILT TRAP DETAIL
Not To Scale
Depth to soffit = 3.0m max.

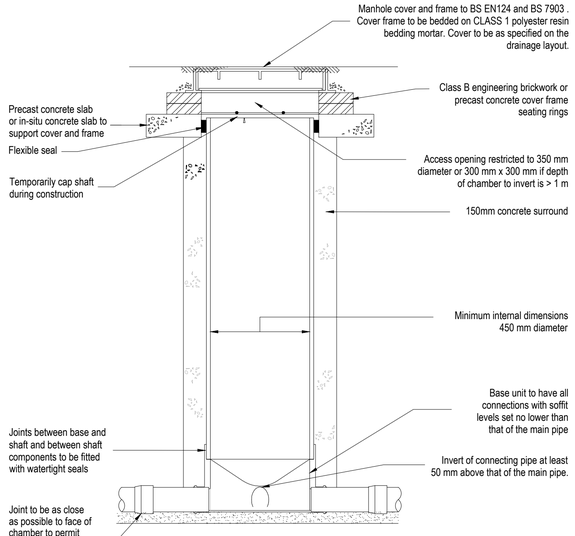

TYPE D (450 DIA) INSPECTION CHAMBER DETAIL
Not To Scale

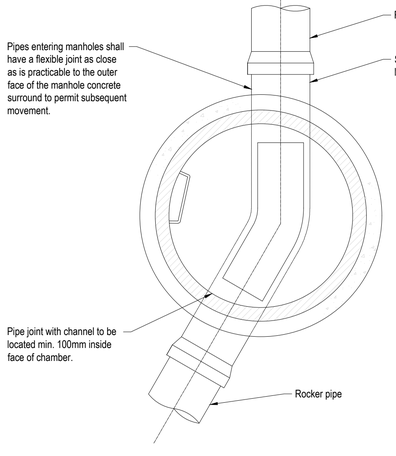

MANHOLE - TYPE B not to scale
Depth to soffit = 3.0m max.

MH chamber sizes

Diameter of Largest pipe in Manhole (mm)	Internal Diameter of Manhole (mm)
Less than 375	1200
375 - 700	1500
750 - 900	1800

Rocker Pipes

Pipe dia.	Rocker pipe length
100 - 450	0.6m

"AS BUILT" DRAWINGS - REV AsB
THIS DRAWING REPRESENTS FINAL CONSTRUCTION ISSUE INFORMATION. THIS DRAWING MUST BE READ IN CONJUNCTION WITH ALL OTHER PROJECT DRAWINGS INCLUDING SPECIALIST SUBCONTRACTORS DRAWINGS

GENERAL NOTES

DRAWINGS AND SPECIFICATIONS: This drawing is to be read in conjunction with all relevant Architects, Engineers and Specialists drawings together with the specification.

C D M : SIGNIFICANT HAZARDS

THE FOLLOWING HEALTH AND SAFETY HAZARDS ARE IDENTIFIED BY THE DESIGNER AS ABNORMAL IN PURSUANCE OF THE CURRENT CONSTRUCTION DESIGN AND MANAGEMENT REGULATIONS.

RISKS DURING CONSTRUCTION:
- Refer to drawing 0050.

OPERATION / MAINTENANCE RISKS:
- Refer to drawing 0050.

RISKS DURING DEMOLITION/DECOMMISSIONING/DISMANTLING/ALTERATIONS:
- Refer to drawing 0050.

IT IS ASSUMED THAT ALL WORKS WILL BE CARRIED OUT BY COMPETENT & ADEQUATELY RESOURCED CONTRACTOR(S) TO SAFE SYSTEMS OF WORK.

THIS DRAWING IS THE COPYRIGHT OF CRADDY PITCHERS LTD AND MUST NOT BE COPIED, REPRODUCED OR SUBMITTED TO OTHER PARTIES WITHOUT THEIR PERMISSION.

Client
ALDI - Aldi Stores Ltd.

Project Title
PROPOSED ALDI STORE

Project Address
TANBRIDGE RETAIL PARK
WORTHING ROAD, HORSHAM
RH12 1AJ

Drawing Title
PRIVATE DRAINAGE DETAILS SHEET 1 OF 3

Job No.	Originator	Zone	Level	Type	Role
11787	CDY	XX	XX	DR	D

System Classification	Drawing No.	Suitability	Revision
Ss_50_35_00	0055	CR	AsB

Drawn	Checked	Date	Scale	Size
NKS	CS	24.10.22	AS SHOWN	A1

Approved	Craddys Job#
RAG	11787

IF YOU HAVE A QUERY CALL US
SCALING FROM THIS DRAWING OR OBTAINING DIMENSIONS ELECTRONICALLY MAY NOT PROVIDE ACCURATE INFORMATION & SHOULD BE AVOIDED. WORK ONLY FROM FIGURED DIMENSIONS.

CRADDYS
Consulting Civil and Structural Engineers
www.craddys.co.uk

REV	DATE	DESCRIPTION	DRW	CHK
P01	24.10.22	INITIAL ISSUE	NKS	CS
C01	04.04.23	CONSTRUCTION ISSUE	NKS	CS
C02	08.10.24	FINAL CONSTRUCTION ISSUE	GW	CS
AsB	01.11.24	AS-BUILT	MTB	AST

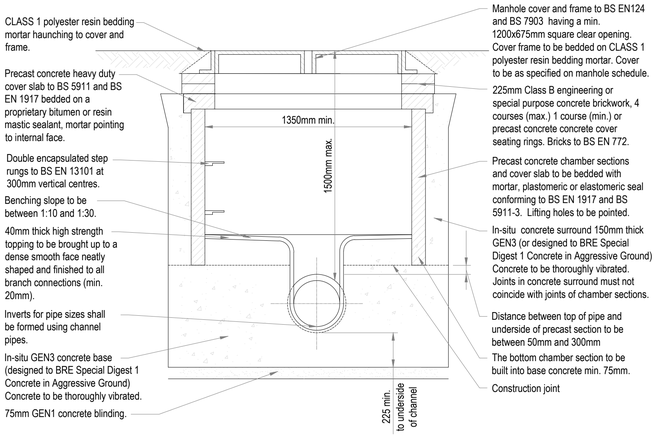

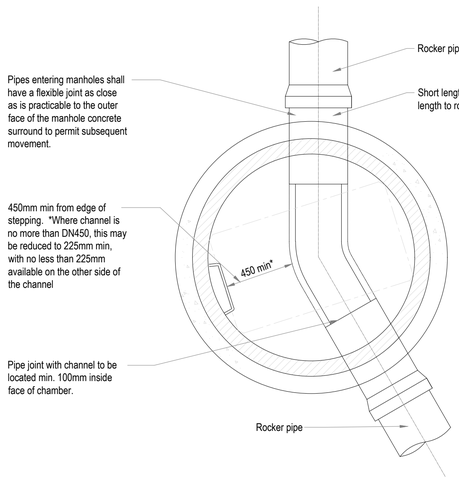

Manhole Chamber Sizes

Diameter of Largest pipe in Manhole (mm)	Internal Diameter of Manhole (mm)
Less than 450	1350
500 - 700	1500
750 - 900	1800
Greater than 900	Pipe dia. + 900

Rocker Pipe Lengths

Pipe dia.	Rocker pipe length
100 - 600	0.6m
601 - 750	1.0m
over 750	1.25m

MANHOLE - TYPE C - RIGID MATERIAL WITH CONCRETE SURROUND

Depth to soffit of pipe less than 1.5m

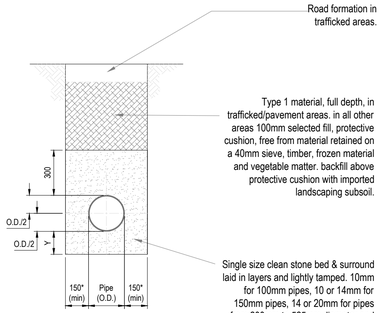

Notes:

1. Bedding beneath and at sides of pipe to be well compacted.
2. The first 300mm of fill above the crown of the pipe is to be lightly tamped by hand. Mechanical compaction may be used only above this level.
3. Geotextiles may be used where directed or approved by the engineer to contain bedding material in certain soils e.g. running sand.
4. In very wet conditions, where directed or approved by the engineer a temporary land drain may be laid within the granular bed.
5. * = 150mm for 300mm diameter pipes or less.
6. * = 200mm for pipe diameters over 300mm.
7. Y = 100mm for 100mm diameter pipes or less.
8. Y = 150mm for pipe diameters more than 100mm.
9. Y = 200mm for pipe trenches in rock.

CLASS S BEDDING FOR DRAINS (WHERE COVER TO SOFFIT IS MORE THAN 1200mm IN TRAFFICKED AREAS OR 600mm ELSEWHERE) BEDDING FACTOR 2.5

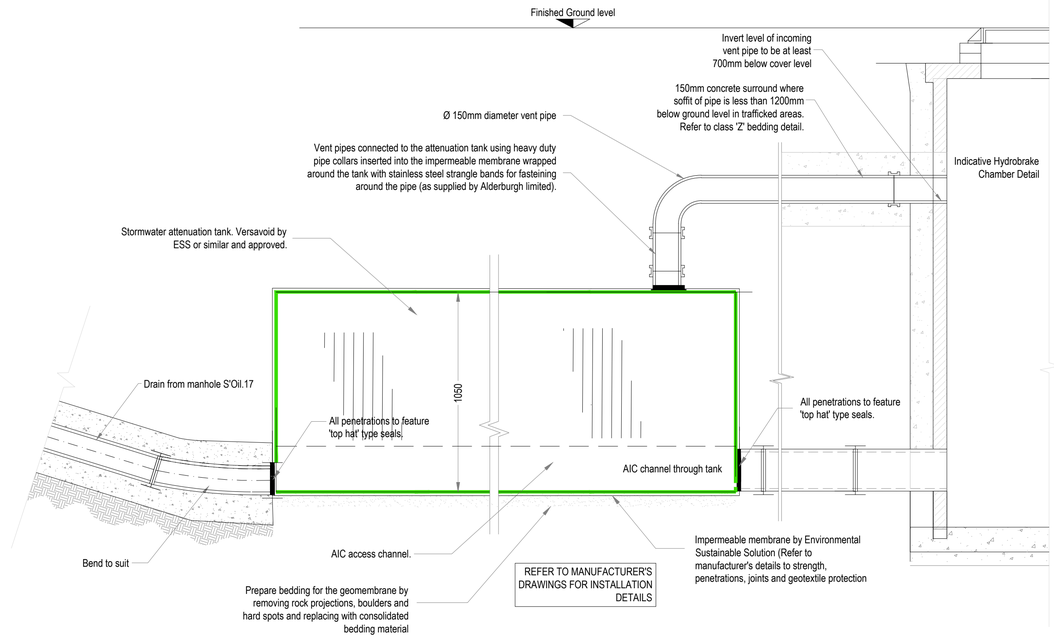

TYPICAL SECTION THROUGH ATTENUATION TANK WITH VENTILATION.

NTS

"AS BUILT" DRAWINGS - REV AsB

THIS DRAWING REPRESENTS FINAL CONSTRUCTION ISSUE INFORMATION. THIS DRAWING MUST BE READ IN CONJUNCTION WITH ALL OTHER PROJECT DRAWINGS INCLUDING SPECIALIST SUBCONTRACTORS DRAWINGS

GENERAL NOTES

DRAWINGS AND SPECIFICATIONS: This drawing is to be read in conjunction with all relevant Architects, Engineers and Specialists drawings together with the specification.

C D M : SIGNIFICANT HAZARDS

THE FOLLOWING HEALTH AND SAFETY HAZARDS ARE IDENTIFIED BY THE DESIGNER AS ABNORMAL IN PURSUANCE OF THE CURRENT CONSTRUCTION DESIGN AND MANAGEMENT REGULATIONS.

RISKS DURING CONSTRUCTION:
- Refer to drawing 0050.

OPERATION / MAINTENANCE RISKS:
- Refer to drawing 0050.

RISKS DURING DEMOLITION/DECOMMISSIONING/DISMANTLING/ALTERATIONS:
- Refer to drawing 0050.

IT IS ASSUMED THAT ALL WORKS WILL BE CARRIED OUT BY COMPETENT & ADEQUATELY RESOURCED CONTRACTOR(S) TO SAFE SYSTEMS OF WORK.

THIS DRAWING IS THE COPYRIGHT OF CRADDY PITCHERS LTD AND MUST NOT BE COPIED, REPRODUCED OR SUBMITTED TO OTHER PARTIES WITHOUT THEIR PERMISSION.

Client
ALDI - Aldi Stores Ltd.

Project Title
PROPOSED ALDI STORE

Project Address
TANBRIDGE RETAIL PARK
WORTHING ROAD, HORSHAM
RH12 1AJ

Drawing Title
PRIVATE DRAINAGE DETAILS SHEET 2 OF 3

Job No.	Originator	Zone	Level	Type	Role
11787	CDY	XX	XX	DR	D

System Classification	Drawing No.	Suitability	Revision
Ss_50_35_00	0056	CR	AsB

Drawn	Checked	Date	Scale	Size
NKS	CS	24.10.22	AS SHOWN	A1

Approved	Craddys Job#
RAG	11787

IF YOU HAVE A QUERY CALL US
SCALING FROM THIS DRAWING OR OBTAINING DIMENSIONS ELECTRONICALLY MAY NOT PROVIDE ACCURATE INFORMATION & SHOULD BE AVOIDED. WORK ONLY FROM FIGURED DIMENSIONS

CRADDYS
Consulting Civil and Structural Engineers
www.craddys.co.uk

REV	DATE	DESCRIPTION	DRW	CHK
P01	24.10.22	INITIAL ISSUE	NKS	CS
P02	07.11.22	CONCRETE SURROUND ADDED TO RWH TANK DETAIL	NKS	CS
C01	06.04.23	CONSTRUCTION ISSUE	NKS	SH
C02	09.10.24	FINAL CONSTRUCTION ISSUE	GW	SH
AsB	01.11.24	AS-BUILT	MTB	AST

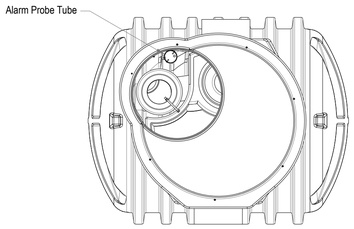

Unit Ref No	Nominal Flow	Dim L (mm)	Approx Empty Weight (kgs)	Fall across unit	Inlet Size 'A'	Outlet Size 'B'
NSBP003	3 L/s	1700	180	100	Ø160 mm	Ø160 mm
NSBP006	6 L/s	1700	180	100	Ø315 mm	Ø315 mm

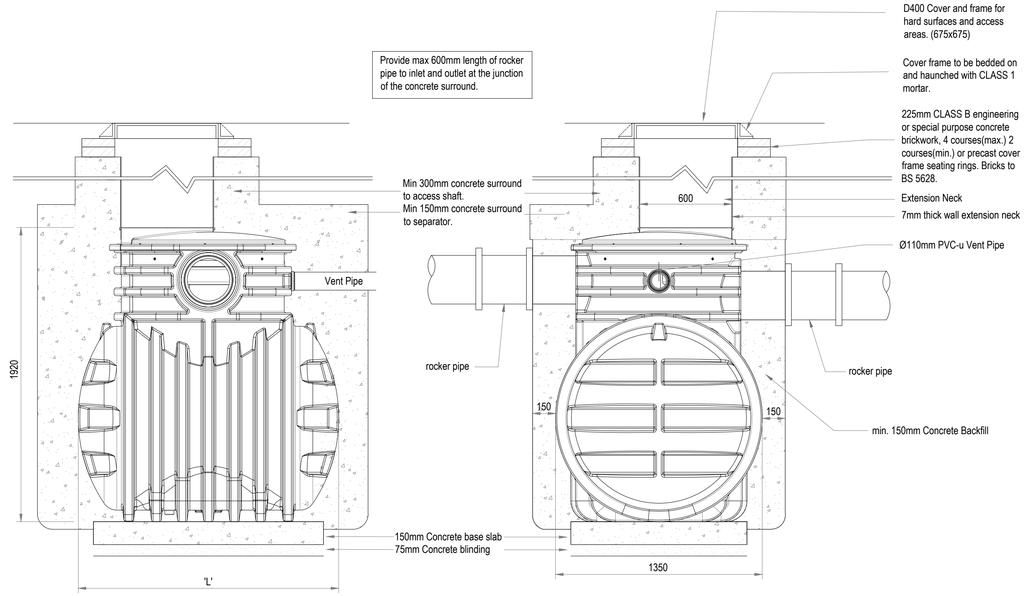

CLASS 1 BYPASS INTERCEPTOR - KLARGESTER

Scale: 1:20

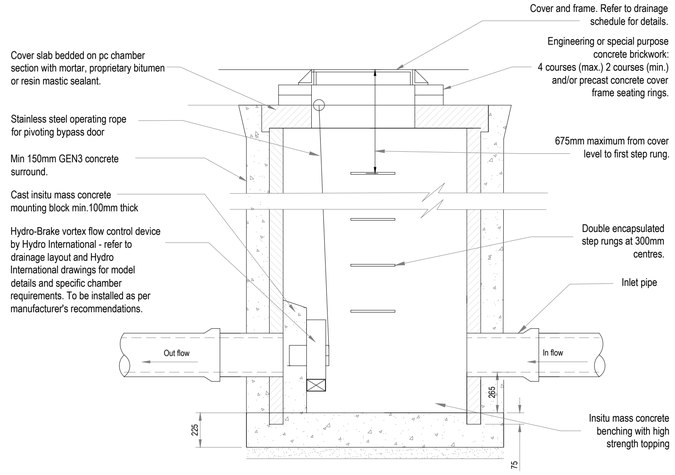

TYPICAL HYDRO-BRAKE CHAMBER DETAIL.

Scale: 1:20

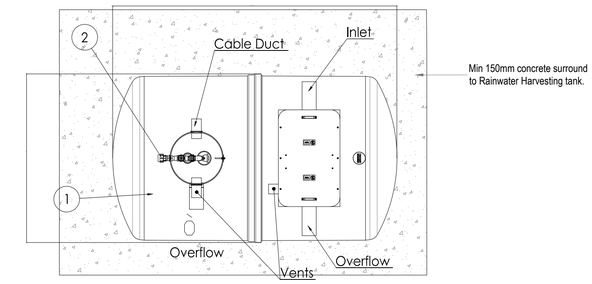

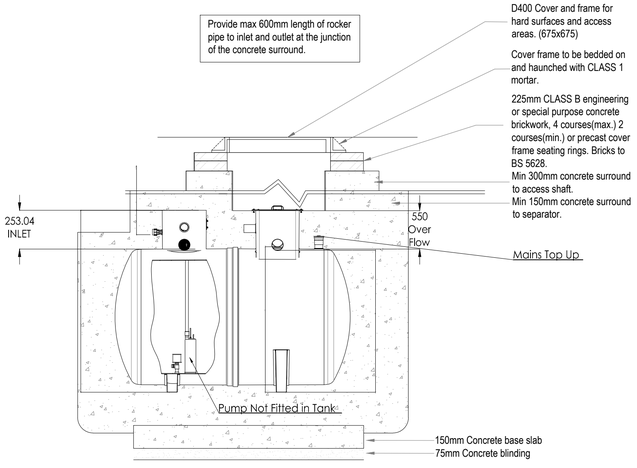

UNDERGROUND RAINWATER HARVESTING SYSTEM - KLARGESTER ENV0275

Scale: 1:20

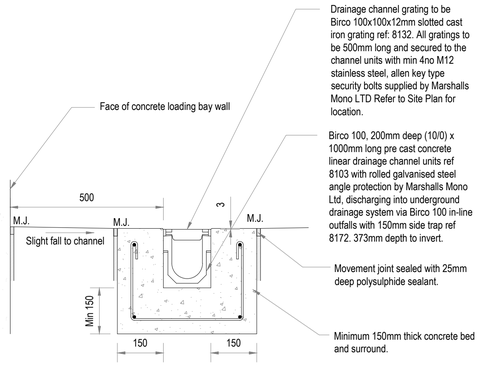

LOADING BAY RAMP DRAINAGE CHANNEL

Scale 1:10

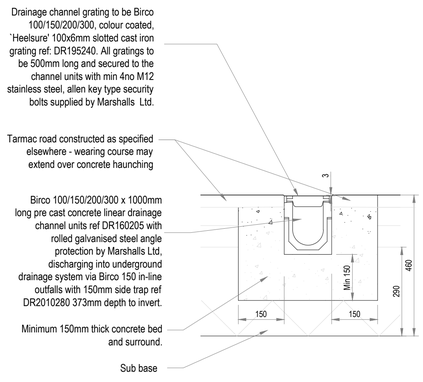

CAR PARK DRAINAGE CHANNEL

Scale 1:10

"AS BUILT" DRAWINGS - REV AsB

THIS DRAWING REPRESENTS FINAL CONSTRUCTION ISSUE INFORMATION. THIS DRAWING MUST BE READ IN CONJUNCTION WITH ALL OTHER PROJECT DRAWINGS INCLUDING SPECIALIST SUBCONTRACTORS DRAWINGS

GENERAL NOTES

DRAWINGS AND SPECIFICATIONS: This drawing is to be read in conjunction with all relevant Architects, Engineers and Specialists drawings together with the specification.

C D M : SIGNIFICANT HAZARDS

THE FOLLOWING HEALTH AND SAFETY HAZARDS ARE IDENTIFIED BY THE DESIGNER AS ABNORMAL IN PURSUANCE OF THE CURRENT CONSTRUCTION DESIGN AND MANAGEMENT REGULATIONS.

RISKS DURING CONSTRUCTION:
- Refer to drawing 0050.

OPERATION / MAINTENANCE RISKS:
- Refer to drawing 0050.

RISKS DURING DEMOLITION/DECOMMISSIONING/DISMANTLING/ALTERATIONS:
- Refer to drawing 0050.

IT IS ASSUMED THAT ALL WORKS WILL BE CARRIED OUT BY COMPETENT & ADEQUATELY RESOURCED CONTRACTOR(S) TO SAFE SYSTEMS OF WORK.

THIS DRAWING IS THE COPYRIGHT OF CRADDY PITCHERS LTD AND MUST NOT BE COPIED, REPRODUCED OR SUBMITTED TO OTHER PARTIES WITHOUT THEIR PERMISSION.

Client
ALDI - Aldi Stores Ltd.

Project Title
PROPOSED ALDI STORE

Project Address
TANBRIDGE RETAIL PARK
WORTHING ROAD, HORSHAM
RH12 1AJ

Drawing Title
PRIVATE DRAINAGE DETAILS SHEET 3 OF 3

Job No.	Originator	Zone	Level	Type	Role
11787	CDY	XX	XX	DR	D

System Classification	Drawing No.	Suitability	Revision
Ss_50_35_00	0057	CR	AsB

Drawn	Checked	Date	Scale	Size
NKS	CS	24.10.22	AS SHOWN	A1

Approved	Craddys Job#
RAG	11787

IF YOU HAVE A QUERY CALL US
SCALING FROM THIS DRAWING OR OBTAINING DIMENSIONS ELECTRONICALLY MAY NOT PROVIDE ACCURATE INFORMATION & SHOULD BE AVOIDED. WORK ONLY FROM FIGURED DIMENSIONS

CRADDYS
Consulting Civil and Structural Engineers
www.craddys.co.uk

REV	DATE	DESCRIPTION	DRW	CHK
P01	24.10.22	FIRST ISSUE	NKS	CS
P02	06.01.23	UPDATED TO REFLECT CHANGES IN LAYOUT	NKS	CS
C01	06.04.23	CONSTRUCTION ISSUE	NKS	SH
C02	08.10.24	FINAL CONSTRUCTION ISSUE	GW	SH
AsB	01.11.24	AS-BUILT	MTB	AST

GENERAL NOTES

DRAWINGS AND SPECIFICATIONS: This drawing is to be read in conjunction with all relevant Architects, Engineers and Specialists drawings together with the specification.

STORM MANHOLE SCHEDULE

MH Ref.	Cover & Invert Level (m)	Depth (m)	Pipes In Dia. (mm)	Pipes In Invert Level (m)	Pipes Out Dia. (mm)	Pipes Out Invert Level (m)	MH Size (mm)	MH Type	Cover Size (mm)	Cover Grade	Eastings	Northings
Sw.03	CL = 35.725 IL = 34.180	1.545			∅225	34.400	Ø1200	Type B	675x675	D400	516733.362	130470.684
Sw.05	CL = 35.911 IL = 34.900	1.011			∅150	34.900	Ø1200	Type Silt Trap	675x675	B125	516777.413	130472.876
Sw.06	CL = 36.486 IL = 34.300	2.186	Ø150	34.300	∅150	34.300	Ø1200	Type B Silt Trap	675x675	D400	516755.354	130507.468
S'Rwh.07	CL = 36.215 IL = 34.950	1.265			∅150	34.950	N/A	Rainwater Harvesting Tank	N/A	D400	516738.886	130490.860
Sw.08	CL = 36.205 IL = 33.950	2.255	Ø150 Ø150	34.025 34.025	∅225	33.950	Ø1200	Type B	675x675	D400	516735.744	130496.331
Sw.04	CL = 35.826 IL = 33.800	2.026	Ø225 Ø225	33.800 33.800	∅225	33.800	Ø1200	Type B Silt Trap	675x675	D400	516722.434	130487.908
S'Sump.01	CL = 35.282 IL = 34.838	0.444			∅150	34.888	N/A	Drainage Channel	N/A	N/A	516738.467	130459.739
Sw.02	CL = 35.842 IL = 34.300	1.542	Ø150	34.375	∅225	34.300	Ø1200	Type B Silt Trap	675x675	D400	516719.085	130490.286
Sw.09	CL = 36.600 IL = 35.400	1.200			∅150	35.400	Ø1200	Type B Silt Trap	675x675	D400	516722.582	130524.147
Sw.14	CL = 36.975 IL = 35.700	1.275			∅150	35.700	Ø1200	Type B	675x675	D400	516753.292	130530.259
Sw.15	CL = 36.614 IL = 35.400	1.214	Ø150	35.400	∅150	35.400	Ø1200	Type B Silt Trap	675x675	D400	516754.496	130513.863
Sw.11	CL = 36.530 IL = 34.600	1.930	Ø150 Ø150	34.675 34.675	∅225	34.600	Ø1200	Type B Silt Trap	675x675	D400	516734.614	130513.623
Sw.12	CL = 36.152 IL = 34.800	1.352			∅150	34.800	Ø1200	Type B Silt Trap	675x675	D400	516735.021	130493.991
Sw.13	CL = 36.126 IL = 34.000	2.126	Ø150 Ø225 Ø225	34.300 34.075 34.150	∅225	34.075	Ø1200	Type B Silt Trap	675x675	D400	516723.698	130501.312
S'Oil.17	CL = 36.173 IL = 33.880	2.293	Ø225	33.980	∅225	33.880	N/A	Oil Interceptor	675x675	D400	516723.177	130503.739
Sw.18	CL = 36.428 IL = 33.406	3.022	Ø375	33.406	∅300	33.406	Ø2100	Hydrobrake Chamber	675x675	D400	516720.210	130517.585

FOUL MANHOLE SCHEDULE

MH Ref.	Cover & Invert Level (m)	Depth (m)	Pipes In Dia. (mm)	Pipes In Invert Level (m)	Pipes Out Dia. (mm)	Pipes Out Invert Level (m)	MH Size (mm)	MH Type	Cover Size (mm)	Cover Grade	Eastings	Northings
Fre.01	CL = 36.476 IL = 35.900	0.576			∅100	35.900	N/A	Rodding Eye	N/A	B125	516753.909	130497.028
Fre.02	CL = 36.550 IL = 36.000	0.550			∅100	36.000	N/A	Rodding Eye	N/A	B125	516776.333	130446.398
Fxx.02	CL = 36.550 IL = 35.027	1.523	Ø100 Ø100	35.027 35.027	∅100	35.027	N/A	Junction	N/A	N/A	516782.736	130450.384
Fw.03	CL = 36.238 IL = 34.680	1.558	Ø100	35.000	∅100	34.980	Ø450	Type D	350dia or 300x300	B125	516783.635	130448.929
Fre.04	CL = 36.156 IL = 35.600	0.556			∅100	35.600	N/A	Rodding Eye	N/A	B125	516736.837	130486.216
Fre.05	CL = 36.550 IL = 36.000	0.550			∅100	36.000	N/A	Rodding Eye	N/A	B125	516774.566	130445.233
Fxx.05	CL = 36.550 IL = 34.605	1.945	Ø100 Ø100	34.605 34.605	∅100	34.605	N/A	Junction	N/A	N/A	516766.008	130439.469
Fw.06	CL = 36.026 IL = 34.550	1.476	Ø100 Ø100	34.550 34.550	∅100	34.550	Ø1200	Type B	675x675	D400	516767.616	130436.892
Fw.07	CL = 35.909 IL = 35.500	0.409			∅100	35.500	Ø450	Type D	450dia or 450x450	D400	516730.825	130476.254

STORM PIPELINE SCHEDULE

Pipe Code	U/S Manhole Ref	D/S Manhole Ref	Diameter (mm)	Length (m)	Gradient	Material	Bedding
1.000	Sw.03	Sw.04	225	20.4	1:34	PVC-U	Class "S"
2.000	Sw.05	Sw.06	150	41.0	1:68	PVC-U	Class "S"
2.001	Sw.06	Sw.08	150	22.6	1:82	PVC-U	Class "S"
3.000	S'Rwh.07	Sw.08	150	6.3	1:7	PVC-U	Class "S"
2.002	Sw.08	Sw.04	225	15.8	1:105	PVC-U	Class "S"
1.001	Sw.04	S'Tank	225	23.0	1:62	PVC-U	Class "S"
4.000	S'Sump.01	Sw.02	150	36.2	1:71	PVC-U	Class "S"
4.001	Sw.02	Sw.13	225	12.0	1:80	PVC-U	Class "S"
5.000	Sw.09	Sw.11	150	16.0	1:22	PVC-U	Class "S"
6.000	Sw.14	Sw.15	150	16.4	1:55	PVC-U	Class "S"
6.001	Sw.15	Sw.11	150	19.9	1:27	PVC-U	Class "S"
5.001	Sw.11	Sw.13	225	16.5	1:31	PVC-U	Class "S"
7.000	Sw.12	Sw.13	150	13.5	1:27	PVC-U	Class "S"
4.002	Sw.13	S'Oil.17	225	2.5	1:26	PVC-U	Class "S"
4.003	S'Oil.17	S'Tank	225	7.3	1:16	PVC-U	Class "S"
1.002	S'Tank	Sw.18	375	6.8	1:284	PVC-U	Class "S"
1.003	Sw.18	Sws.04	300	3.6	1:41	PVC-U	Class "S"

FOUL PIPELINE SCHEDULE

Pipe Code	U/S Manhole Ref	D/S Manhole Ref	Diameter (mm)	Length (m)	Gradient	Material	Bedding
1.000	Fre.01	Fxx.02	100	54.8	1:63	PVC-U	Class "S"
2.000	Fre.02	Fxx.02	100	7.5	1:8	PVC-U	Class "S"
1.001	Fxx.02	Fw.03	100	1.7	1:63	PVC-U	Class "S"
1.002	Fw.03	Fw.06	100	20.0	1:47	PVC-U	Class "S"
3.000	Fre.04	Fxx.05	100	55.1	1:55	PVC-U	Class "S"
4.000	Fre.05	Fxx.05	100	10.3	1:7	PVC-U	Class "S"
3.001	Fxx.05	Fw.06	100	3.0	1:55	PVC-U	Class "S"
1.003	Fw.06	Fws.03	100	7.9	1:3	PVC-U	Class "S"
5.000	Fw.07	Ex.MH	100	12.8	1:7	PVC-U	Class "S"

"AS BUILT" DRAWINGS - REV AsB
THIS DRAWING REPRESENTS FINAL CONSTRUCTION ISSUE INFORMATION. THIS DRAWING MUST BE READ IN CONJUNCTION WITH ALL OTHER PROJECT DRAWINGS INCLUDING SPECIALIST SUBCONTRACTORS DRAWINGS

C D M : SIGNIFICANT HAZARDS

THE FOLLOWING HEALTH AND SAFETY HAZARDS ARE IDENTIFIED BY THE DESIGNER AS ABNORMAL IN PURSUANCE OF THE CURRENT CONSTRUCTION DESIGN AND MANAGEMENT REGULATIONS.

RISKS DURING CONSTRUCTION:
- Refer to drawing 0050.

OPERATION / MAINTENANCE RISKS:
- Refer to drawing 0050.

RISKS DURING DEMOLITION/DECOMMISSIONING/DISMANTLING/ALTERATIONS:
- Refer to drawing 0050.

IT IS ASSUMED THAT ALL WORKS WILL BE CARRIED OUT BY COMPETENT & ADEQUATELY RESOURCED CONTRACTOR(S) TO SAFE SYSTEMS OF WORK.

THIS DRAWING IS THE COPYRIGHT OF CRADDY PITCHERS LTD AND MUST NOT BE COPIED, REPRODUCED OR SUBMITTED TO OTHER PARTIES WITHOUT THEIR PERMISSION.

Client
ALDI - Aldi Stores Ltd.

Project Title
PROPOSED ALDI FOODSTORE

Project Address
TANBRIDGE RETAIL PARK
WORTHING ROAD, HORSHAM
RH12 1AJ

Drawing Title
PROPOSED DRAINAGE SCHEDULES

Job No.	Originator	Zone	Level	Type	Role
79-E1439	CDY	XX	XX	DR	D

System Classification	Drawing No.	Suitability	Revision
Ss_50_35_00	0051	CR	AsB

Drawn	Checked	Date	Scale	Size
NKS	CS	24.10.22	NTS	A1

Approved	Craddys Job#
RAG	11787

IF YOU HAVE A QUERY CALL US
SCALING FROM THIS DRAWING OR OBTAINING DIMENSIONS ELECTRONICALLY MAY NOT PROVIDE ACCURATE INFORMATION & SHOULD BE AVOIDED. WORK ONLY FROM FIGURED DIMENSIONS

CRADDYS
Consulting Civil and Structural Engineers
www.craddys.co.uk

APPENDIX C
Drainage Installation Photos



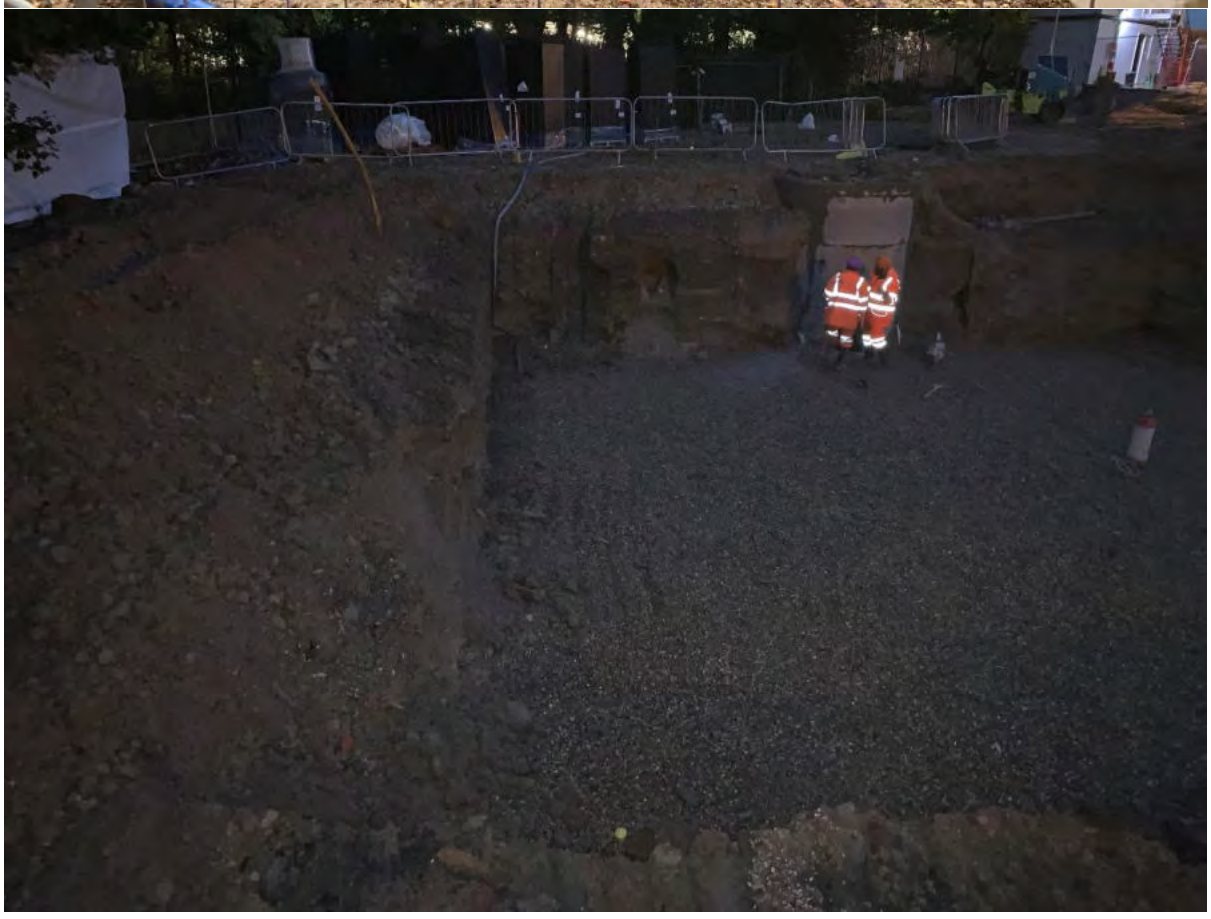




PLANT HIRE
GS












VOLVO
0121 798 8000




OVER
FLOW
OVER
FLOW


OVER
FLOW










JB PLANT HIRE
JB PLANT HIRE
0121 798 8000
MECALAC


PLANT HIRE






Galaxy A32 5G






PLANT HIRE


VOLVO
ECR88D


0121 798 6000










JB PLANT HIRE


PLANT HIRE












GROUNDSHO
Pollington
EN 1917 &
BS 5911-3
16.12.22
Pollington
EN 1917 &
BS 5911-3


GROUNDSHORE




www.bilplanthire.co.uk







