ADDITION BIKE SHED x3
EXTERNAL MEASUREMENTS

Weight:
103kg (16.2 stone)
Door Aperture:
1180mm (3ft 10") x
1140mm (3ft 9")

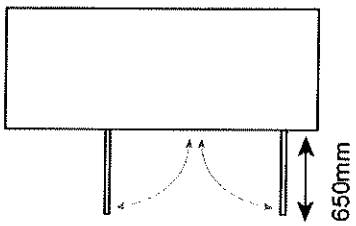

Door Clearance
650mm (2ft 1")

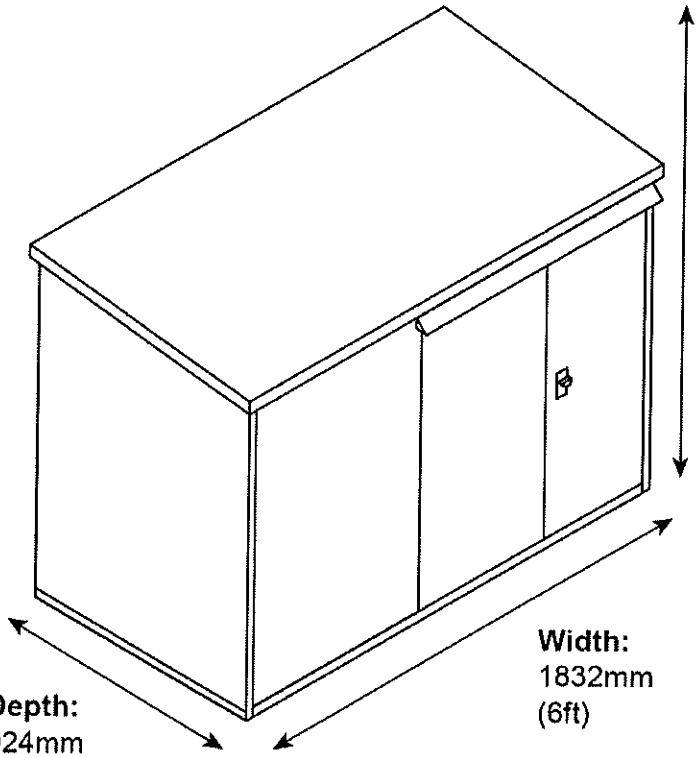

Height (at rear):
1478mm
(4ft 10")

Height (at front):
1434mm
(4ft 8")

Depth:
924mm
(3ft)

Width:
1832mm
(6ft)

ADDITION BIKE SHED x3
INTERNAL MEASUREMENTS

A. Internal Height (at rear):
1440mm (4ft 8")
B. Internal Height (at front):
1335mm (4ft 4")
C. Internal Depth:
810mm (2ft 7")
D. Internal Width:
1725mm (5ft 7")

*Please note, if the optional wooden subfloor is selected with this product the internal height measurement will decrease by approximately 50mm

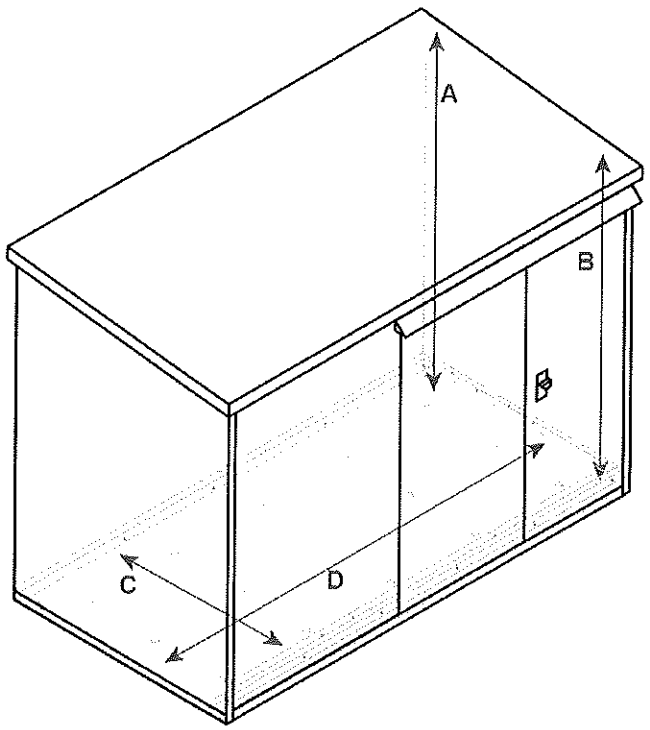

ADDITION BIKE SHED x3
RECOMMENDED BASE SIZE

Base Size:
1990mm (6ft 6") x
1100mm (3ft 7")
Base Depth:
Min. 50mm
Recommended:
Concrete,
Tarmac,
Paving Flags

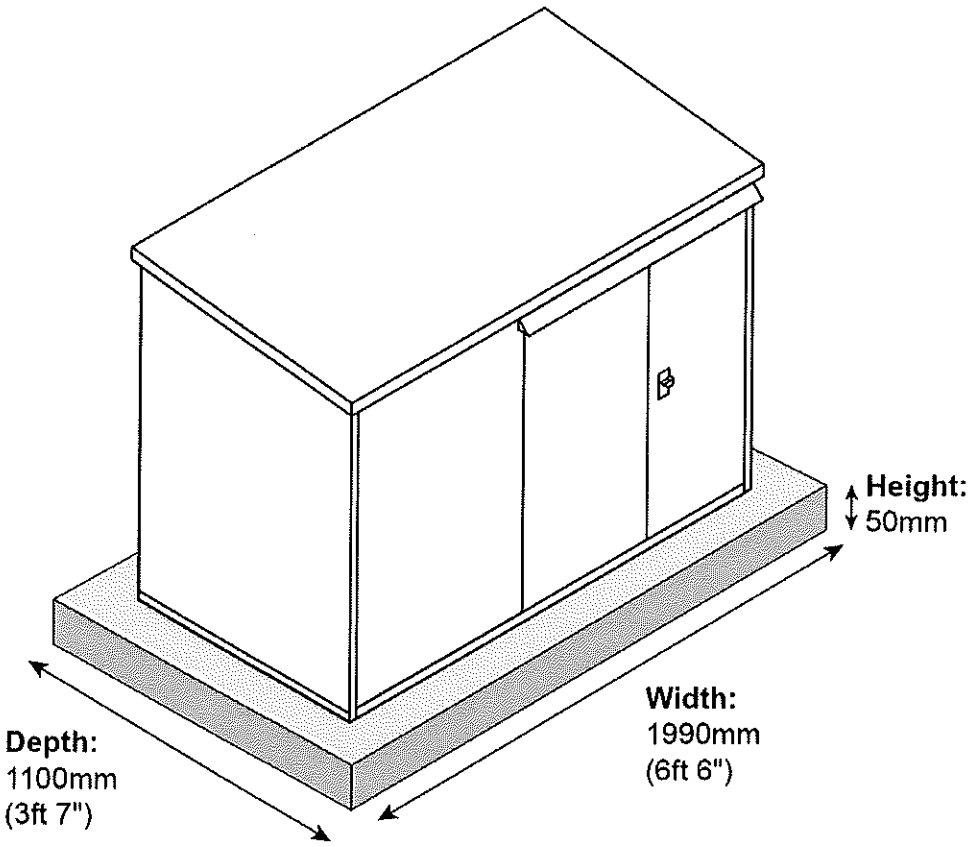

ADDITION BIKE SHED x3
EXAMPLE CAPACITY

Bike Model:
Indi ATB2
Overall length
approx. 1680mm
Capacity:
Up to 3
bikes
Shelving:
Half and full
width shelves
available. Please
check seat/
handle bar height
before ordering.

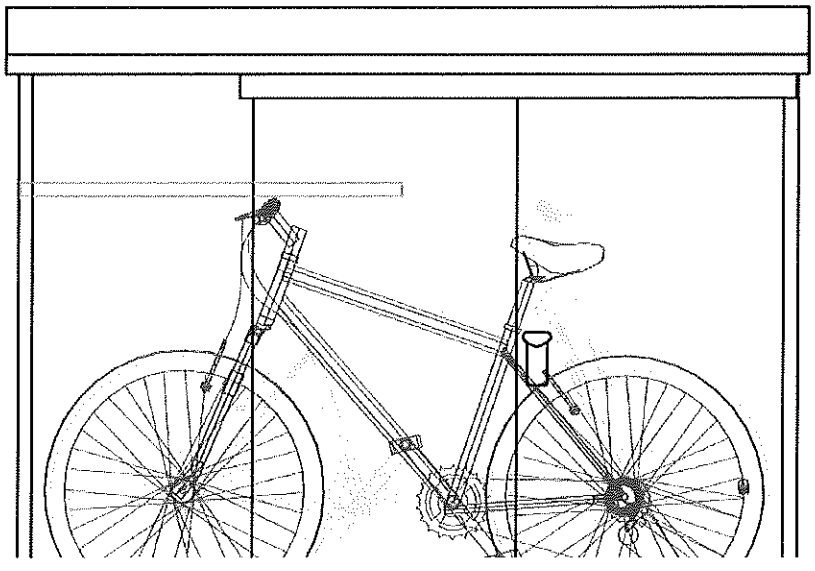



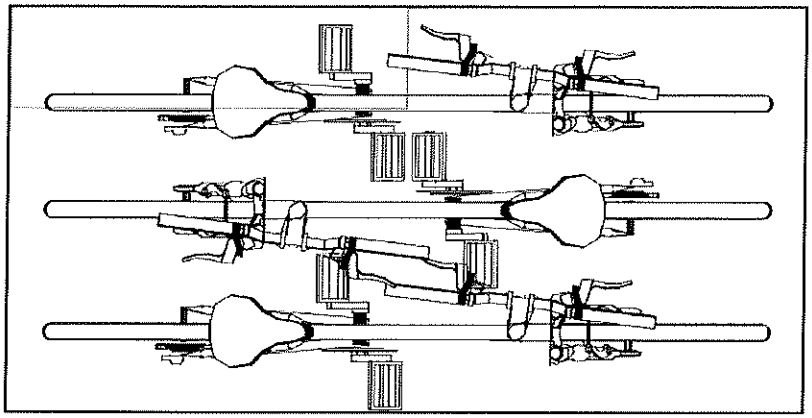

PLEASE CHECK MEASUREMENTS & BIKES BEFORE ORDERING

ADDITION BIKE SHED x3
DOOR HANDING

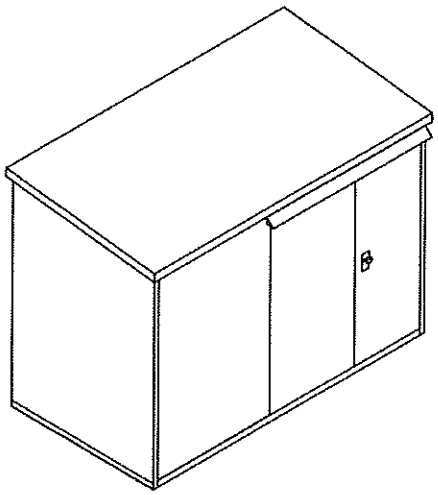

Right Handed
Addition

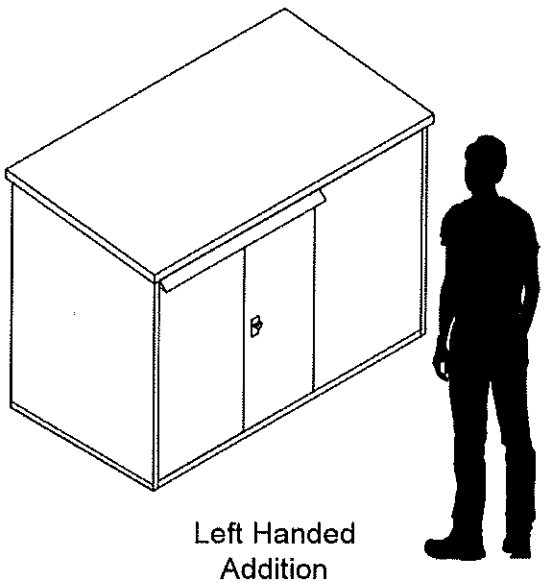

Left Handed
Addition

The handing of your shed is based on viewing from the front and can be changed during installation. Handing does not need to be specified at time of order.

*ALL MEASUREMENTS ARE APPROXIMATE