This drawing is copyright and the property of Alitex Limited. It must not be copied (in whole or in part), used for manufacture or otherwise disclosed without prior written consent of the company. Any copies of this drawing made by any method must also include a copy of this legend. © Alitex Limited 2022.

Third Angle Projection

**IF IN DOUBT ASK**

0 1 2 3 4 Metres

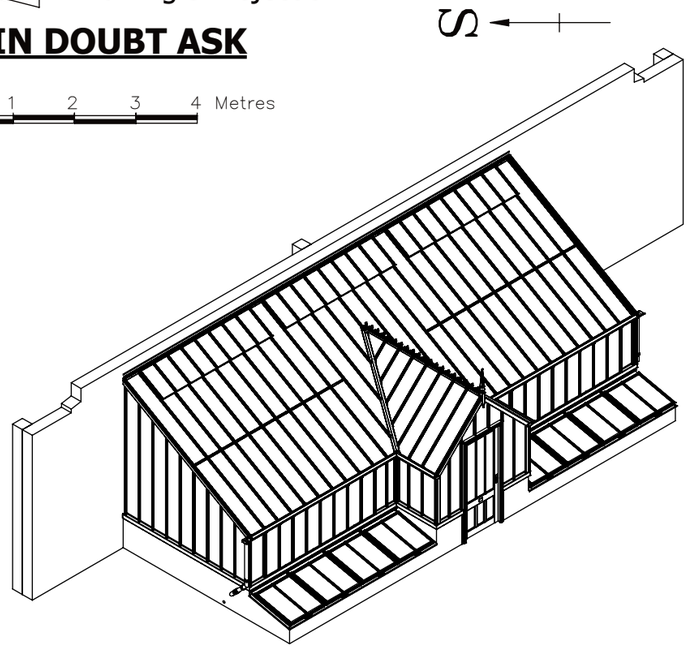

Please note: Isometric view is indicative only, internal accessories are not included in this view

Gullies to be provided by builder as shown. These should go to surface drainage or to a soakaway.

**FOR CONSENT**

SPECIFICATION TO BE CONFIRMED OR EXISTING WALL TO BE SURVEYED BEFORE FINAL GROUND PLAN CAN BE PROVIDED.

*Supporting masonry walls to be laid properly bonded in Flemish Bond, English Bond or as agreed by the Structural Engineer. The rear wall and its supporting piers pillars to consist of exposed concrete blockwork painted white.*

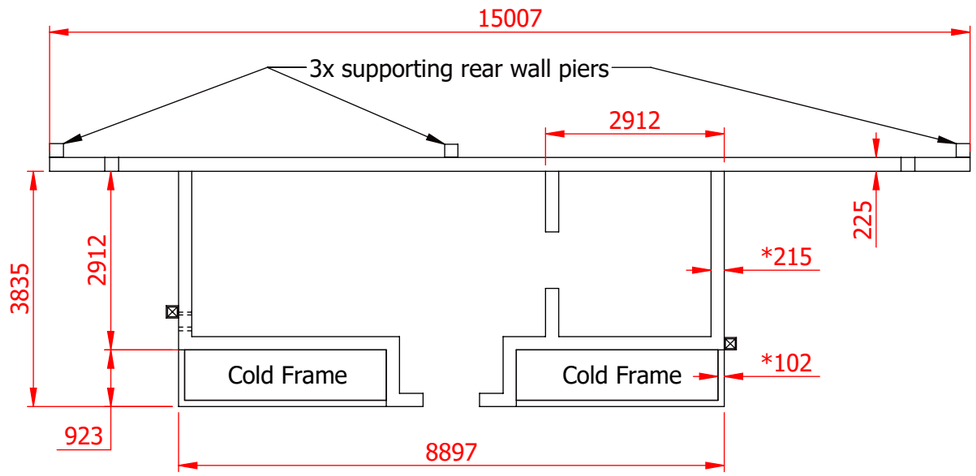


Plan View

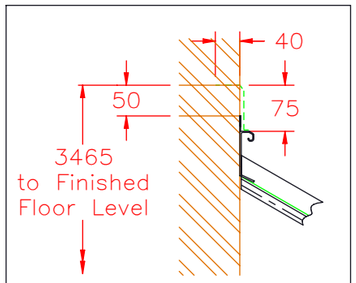


Lead Flashing (by builder) line—this is 50mm or next available mortar line above Ridge

Roof Angle

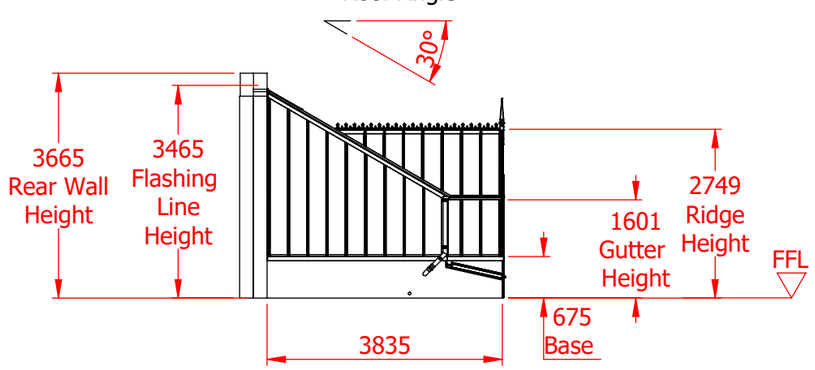


South Elevation

Lobby Roof Pitch

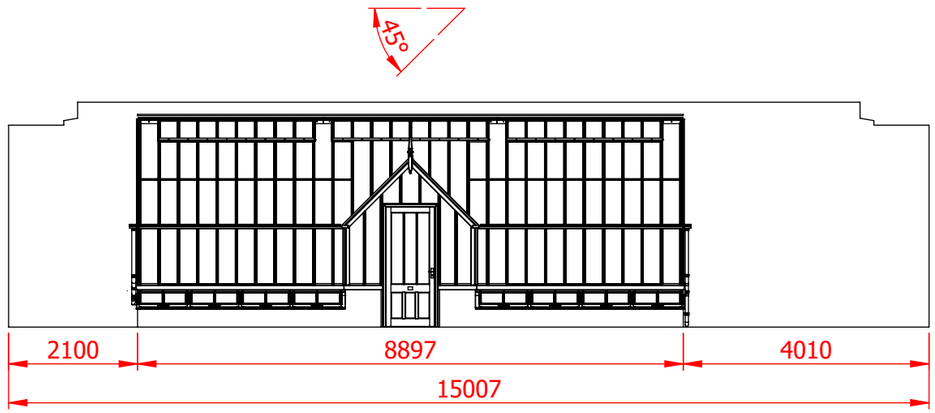


East Elevation

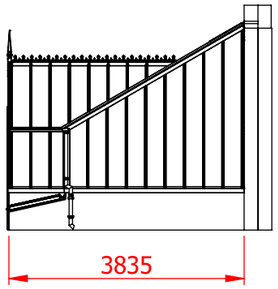


North Elevation

O/L = GUTTER OUT-LET
DIMENSIONS IN MILLIMETRES
PLEASE SEE SEPERATE GROUND PLAN NOTES DOCUMENT.
TOLERANCE: + OR - 5mm, EXCEPT AT DOORWAY.
* 215mm - Nominal dimension, wall should be Solid with header course.
* 102mm - Nominal dimension, single course wall Coldframes & Internal Planters Only.

The dimensions shown on this drawing are those of the required base wall. As our structures are manufactured to accommodate these dimensions the completed base MUST correspond exactly (by steel tape measure) to the measurements on this drawing. If the base wall is incorrect in any way, the expense of alterations and delay in installation etc., are the responsibility of the builder and/or the customer.

| |
|---|
| REV B - REAR WALL DETAIL AMENDED. LC. 01/07/24 |
| REV A - REAR WALL DETAIL SHOWN. LC. 14/04/22 |

ALITEX™ GREENHOUSES AND CONSERVATORIES

TITLE: PROPOSED GROUND PLAN - FOR A LEAN TO 30° HOUSE WITH 315mm BAYS

| DRAWN | DATE | SCALE | DWG NO. | | Revision |
|---|---|---|---|---|---|
| LC | 30/03/22 | 1:100 @ A3 | VPF6001/T | Sheet 1 of 1 | B |
| CHECKED: FM 02.07.24 | CHECKED | CUSTOMER / ORDER No. | Mr. David Neeson, Windrush Harborough Hill | | 31005 |

ALITEX LIMITED, TORBERRY FARM, SOUTH HARTING, PETERSFIELD, HAMPSHIRE. GU31 5RG. TEL: 01730 826900. e-mail: enquiries@alitex.co.uk