Arbortrack Systems Ltd
The Granary Studio
Crewe Lane
Kenilworth
Warwickshire
CV8 2LA

Mobile 07986 122074
E-mail james@arbortrackservices.com

Arboricultural Impact Assessment

& Method Statement:

Former Longfield House

East Street

Rusper

RH12 4RB

REPORT PREPARED FOR:

Mansion Acquisitions Ltd

P.O. Box 239

Horsham

West Sussex

RH13 6YL

REPORT PREPARED BY

James Bell

MSc. (Env). Arbor. A. Tech. Cert. PTI.

Ref: jwmb/rpt3/longfieldhouse/AIAAMS

Date: 6th March 2024

The content and format of this report are for the exclusive use of the client. It may not be sold, lent, hired out or divulged to any third party not directly involved in the subject matter without the written consent of Arbortrack Systems Ltd.

CONTENTS

1.0 Introduction **3**

1.1 Purpose & Use of the Report 3
1.2 Terms of Reference 3
1.3 Development Proposals & Impact Assessment 3
1.4 Sequence of Works 4
1.5 Site Supervision 4
1.6 Site Monitoring & Contact Information 4
1.7 Statement Adoption 5

2.0 Pre-Development Site Preparation **5**

2.1 Arboricultural Works 5
2.2 Preparation of Surfaces 5
2.3 Installation of Tree Protection Barrier 5
2.4 Pre-Development Site Inspection 6

3.0 Development Phase **6**

3.1 General Precautions 6
3.2 Root Protection Areas 6
3.3 Site Access Accommodation & Storage 6
3.4 Routing & Installation of Services 6
3.5 Demolition Measures 6
3.6 Changes in Grade 7
3.7 Construction Measures 7
3.8 Removal of Tree Protection Barrier 7
3.9 Post-Construction Landscaping 7

4.0 Summary of Proposed Methods **8**

4.1 Table of Impacts & Mitigation 8

5.0 Completion **8**

5.1 Completion Meeting 8

Appendix A Tree Protection Plan
Appendix B Tree Survey Schedule & Recommended Tree Works
Appendix C Fencing Specification to BS5837:2012
Appendix D Glossary & General Guidelines

1.0 Introduction

1.1 Purpose & Use of the Method Statement

1.1.1 This impact assessment & method statement report has been prepared for submission to Horsham District Council (HDC) to accompany a s73 application for an adjustment – a realigned/revised driveway - to the extant consent (reference DC.23/0069) at Former Longfield House, East Street, Rusper, RH12 4RB. This statement is intended to demonstrate the feasibility of construction without harm to the retained tree resource on the site. See the material accompanying this report for full scheme details.

1.1.2 This document lays down the methodology for any proposed works that may have an effect upon the trees on and adjacent to the site. It is essential within the scope of any contracts related to the development proposals that this method statement is observed and adhered to. It is recommended that this document form part of the work schedule and specification issued to the building contractors and can be used to form part of the contract.

1.1.3 Copies of this document should be available for inspection on-site. The developer will inform the local planning authority within twenty-four hours if the designated arboriculturist is replaced.

1.2 Terms of Reference

1.2.1 I am instructed by Mr John Sage of Mansion Acquisitions Ltd to prepare an arboricultural impact assessment & method statement report to accompany a s73 application for an adjustment - a realigned driveway - to the extant consent (reference DC.23/0069) at Former Longfield House, East Street, Rusper, RH12 4RB with reference to BS5837:2012 Trees in relation to design, demolition & construction - Recommendations (BS5837:2012).

1.3 Development Proposals & Impact Assessment

1.3.1 See section 1.1.1 and accompanying material for full details of these s73 proposals.

1.3.2 The revised driveway does not require the removal of additional trees other than a small clump of blackthorn. Trees G20 & 4 are already consented for removal, as is tree 5, a dead oak. The footpath to the west of tree 6 has also been approved, subject to an s106 agreement.

1.3.3 The root protection areas (RPAs) of the on-site trees have been morphed (yellow lines) away from the main road to reflect existing site conditions. The revised driveway line does not influence the morphed RPA of tree 6, a roadside oak. On this basis, the driveway can be constructed to a conventional specification.

1.3.4 The great majority of site works will take place beyond the RPAs of retained trees and canopies. Retained trees will be protected through the course of development by fencing to the specifications recommended by BS5837:2012 - see Appendix C for details.

1.4 Sequence of Works

1.4.1 The sequence of works should be as follows:

- recommended tree works - see Appendix B - approved under existing consents
- installation of Tree Protection Barrier (TPB) for construction on suggested line(s)
- driveway construction
- removal of TPB
- soft landscaping, if envisaged

1.5 Site Supervision

1.5.1 An individual, e.g. the Site Agent, must be nominated to be responsible for all arboricultural matters on site. This person must:

- be present on site for the majority of the time
- be aware of the arboricultural responsibilities
- have the authority to stop any work that is causing, or has the potential to cause, harm to any retained tree
- be responsible for ensuring that all site operatives are aware of their responsibilities toward trees on site and the consequences of the failure to observe these responsibilities
- make immediate contact with the local authority and/or the designated arboriculturist in the event of any tree-related problems occurring, whether actual or potential

1.6 Site Monitoring

1.6.1 The site agent will be responsible for monitoring all arboricultural works, inspecting protective fencing and monitoring all on-site works in the context of tree protection. The designated arboriculturist will be available for site visits on a basis to be agreed upon between the client and planning authority when/if appropriate or required, i.e. if required by condition. It is recommended that a record of site visits is maintained for inspection on-site and copies forwarded to the developer/agent and to the local planning authority. A certificate of practical completion can be produced for sites deemed by all parties to merit this.

1.6.2 It is the responsibility of the client to advise Arbortrack when the project begins and to forward on the approval notice when published on the planning portal, should supervision requirements be stipulated.

1.6.3 Principal contact information: 1/. Mr James Bell. Arbortrack Systems Ltd. Arboricultural Consultant 07986 122074. 2/. Mr Andrew Clout. HDC Assistant Arboricultural Officer. 01403 215515. Email: trees@horsham.gov.uk 3/. Mr John Sage. Mansion Acquisitions Ltd. Email mansiondevelopments@googlemail.com. 4/. Site agent details to be advised.

1.7 Statement Adoption

1.7.1 It is recommended that, in due course, acceptance of the recommendations in this report is demonstrated by, for example, the architect specifying in writing to the building contractor that tree care conditions apply in the execution of the contract and by an estimate or written undertaking from the contractor to the architect demonstrating that the practical aspects of observation of such recommendations have been priced in.

1.7.2 If conflicts between any part of a tree and the building arise during the course of development, these can often be resolved quickly and at little cost if a qualified arboriculturist is consulted promptly. Lack of such care is often apparent quickly, and the decline and death of such trees can spoil design aims and can, of course, affect saleability, as well as reflect poorly on the construction and design personnel involved. Trees that have been the recipients of careful handling during construction add considerably to the appeal and value of the finished development.

2.0 Pre-Development Site Preparation

2.1 Arboricultural Works

2.1.1 See Appendix B for full details of tree works required to allow or facilitate development.

2.2 Preparation of Surfaces - n/a

2.3 Installation of Tree Protective Barrier

2.3.1 The TPB must be comprised of a vertical and horizontal scaffold framework, braced to resist impacts, with vertical tubes spaced at a maximum level of 3m. On to this, weldmesh panels should be securely fixed with wire scaffold clamps: see section 6.2.2 and Figure 2 of BS5837:2012 (Appendix C). Hardboard or marine ply sheets can be used as an alternative to weldmesh panels, but these must be firmly fixed to the framework. The location of the TPB is shown in Appendix A.

2.3.2 This TPB is to be erected before any construction work commences on site, remain 'in situ' undamaged for the duration of all work or each phase, and be removed only once all work is completed. If any work other than preparatory tree work is deemed necessary prior to the erection of fencing, the designated arboriculturist should be informed to enable his/her presence to oversee the work being carried out.

2.3.3 The only other exception is the completion of soft landscaping, but if any excavations, however minor, are to be carried out as part of soft landscaping within RPAs, an arboricultural assessment must be carried out beforehand, and any arboricultural protection measures incorporated. The TPB should carry waterproof warning notices denying access within RPAs.

2.3.4 The Tree Protection Plan in Appendix A illustrates where the protective fencing should be located to form the boundary of the Tree Protection Zone (TPZ). The TPZ is an exclusion zone, and suitable steps should be taken to prevent access by pedestrians and vehicles. The storage of any works materials and equipment should be located outside of the TPZ.

2.4 Pre-Development Site Inspection

2.4.1 At the instigation of the client/site agent or HDC, upon the erection of the fencing, the designated arboriculturist will meet the relevant local authority member on site to check the standard of the work(s). If there are any amendments to the protective fencing, these will be agreed upon at this meeting, confirmed in writing, and undertaken thereafter.

3.0 Development Phase

3.1 General Precautions

3.1.1 No fires shall be made on any part of the site or within 10m of the furthest extent of the canopy of any tree or group tree to be retained on-site or on land adjoining.

3.1.2 No spilling or pouring of fuels, oils, solvents, or tar shall be made on any part of the site.

3.1.3 No materials likely to have an adverse effect on tree health, such as oil, bitumen, or cement, will be stored or discharged within 10 metres of the trunk of a tree that is to be retained.

3.1.4 No spillage or discharge of wet mortar or concrete shall be made on any part of the site.

3.1.5 No storage of materials shall be made within the protective fences.

3.1.6 No breaching or moving of the protective fences shall occur without the approval of the designated arboriculturist.

3.1.7 Alterations in levels within the tree protection fence areas shall be avoided.

3.2 Root Protection Areas

3.2.1 The RPA is a desirable zone of protection around the trees' rooting system, and these areas are marked on the plan in Appendix A' The RPAs will lie within the TPZ and, therefore, be fully fenced off (see Appendix A) unless where appropriate ground protection is offered.

3.3 Site Access, Accommodation & Storage

3.3.1 Many site activities are potentially damaging to trees, e.g. material storage, parking, soil compaction and the use of plant machinery. In this latter example, particular care is required to ensure that the operational arcs of excavation and lifting machinery, including their loads, do not physically damage trees when in use or in accessing the site.

3.4 Routing & Installation of Services (n/a)

3.4.1 n/a.It is assumed that service runs will be brought into the site in a manner that avoids the RPAs of retained trees.

3.4.2 Where crown interference with mature trees is a possibility, over-ground services will be routed in an alternative direction. In relation to this, any landscaping taking place should accommodate the presence of over-ground services and take mature tree size into account.

3.5 Demolition Measures (n/a)

3.6 Changes in Grade

3.6.1 The upper layer of topsoil (top 60cm) contains the majority of a tree's roots, and if this is disturbed by a change in ground level, serious damage can be caused. On this basis, as a minimum, level changes should be avoided within RPAs.

3.6.2 If any significant section of ground level requires raising within RPAs, this should be achieved using coarse, granular material such as pebbles. See section 7.4.4.4 of BS5837:2012.

3.6.3 If ground levels need to be altered within 1.5 metres of any tree trunk, prior agreement must be sought from and given by the local authority tree officer.

3.7 Construction Measures

3.7.1 The driveway can be constructed to a conventional specification.

3.8 Removal of Tree Protective Barrier

3.8.1 The protective fencing may be removed only upon completion of the development phase when all drainage and service runs have been installed, and any site machinery has been removed.

3.9 Post-Construction Landscaping

3.9.1 Following the developing phase, some trees may be subject to either landscaping or seeding beneath their canopy, but at this stage, the protective fencing will have been removed.

3.9.2 Any approved landscaping works should avoid the changing of ground levels or deep digging. Mechanised cultivation, such as tractor-mounted rotovation, must not be used within the RPAs of existing trees.

3.9.3 Heavy machinery should not be used in the vicinity of any retained trees.

3.9.4 If herbicides are to be used, they should be appropriate to their purpose and not in such a way as to damage any retained trees or vegetation.

3.9.5 Ideally, retained trees should be within a shrub area as this reduces the chances of compaction and disturbance of root systems.

4.0 Summary of Proposed Methods

4.1 Table of Impacts and Mitigation

4.1.1 The table below summarises the main areas where trees could become damaged by the proposed development and the methods that need to be adopted in order to prevent such damage:

Impact	Mitigation	Reference	Trees Affected
Passage of machinery and storage of materials over RPAs	Construction of protective fencing to acceptable standards	Sections 2.3. Fencing spec Appendix C, Tree Protection Plan Appendix A	6

5.0 Completion

5.1 Completion Meeting

5.1.1 Following completion of the approved works on site, the designated arboriculturist will meet with a local authority representative and agree upon any remedial works deemed necessary (if any).

5.1.2 Any works agreed upon in the above meeting will be confirmed in writing and should be performed to BS3998:2010.

5.1.3 Any work proposed post-development should be checked to avoid a penalty for performing illegal work on a protected tree.


existing access
East Street
Woodbarn
DRIVE
drive
garden
plot 2
plot 3
BINS
proposed house
3-0m wide drive
proposed garage
refuse bins
refuse collection point
new access
Previous approved proposals for The Paddock subject to S106 agreement
Consented for removal on separate approval
Blackthorn
Mixed Species
Oak, English
Ash, Common
Cedar
Yew
Beech
Holly
Hawthorn
Cherry, Laurel
Cherry, Bird
Lime
Sycamore
Elder
Willow, Goat
Willow, Crack
Willow, White
Poplar, Grey
Poplar, Hybrid
Poplar, Lombardy
Poplar, White
Alder, Common
Alder, Grey
Alder, Italian
Birch, Silver
Hornbeam
Pine, Scots
Spruce, Norway
Spruce, Sitka
Fir, Douglas
Fir, Grand
Fir, Nordmann
Fir, Silver
Fir, Noble
Fir, Spanish
Cedar, Deodar
Cedar, Western Red
Cedar, Atlas
Cedar, Lebanon
Larch, European
Larch, Japanese
Larch, Hybrid
Redwood, Coast
Redwood, Dawn
Redwood, Giant
Monkey Puzzle
Juniper
Yew, Irish
Yew, Common
Cypress, Leyland
Cypress, Lawson
Cypress, Monterey
Pine, Corsican
Pine, Lodgepole
Pine, Maritime
Pine, Scots
Pine, Stone
Pine, Austrian
Pine, Macedonian
Pine, Monterey
Pine, Weymouth
Pine, Bristlecone
Pine, Japanese Red
Pine, Japanese White
Pine, Swiss
Pine, Western White
Pine, Wallich
Pine, Mountain
Pine, Ponderosa
Pine, Red
Pine, Umbrella
Pine, Western Yellow
Pine, Yellow
Pine, Chilean
Pine, Parana
Pine, Monkey Puzzle
Pine, Norfolk Island
Pine, Stone
Pine, Umbrella
Pine, Western White
Pine, Wallich
Pine, Mountain
Pine, Ponderosa
Pine, Red

Site: Longfield House

Date: 21/05/19 and 12/05/2023

Appendix B

BS5837:2012 Tree Survey Schedule

Arbortrack Systems Ltd

07986 122074

Surveyor(s): James Bell

Ref: jwmb/rpt3/longfieldhouse/AIAAMS

Tree No.	English Name	Height	Crown Spread N	S	E	W	Ground Clearance	Stem Diameter	Protection Radius	Age Class	Growth Vitality	Structural Condition	B.S. Cat	Sub Cat	Useful Life	Comments
4	Ash, Common	13	2	4	3	3	3	230	2.8	Early Mature	Moderate	Fair	C	2	10+	A sparser than normal canopy Chalara Previously consented for removal under separate approval
5	Oak, English	10	2	3	2.5	1.5	7.5	480	5.8	Mature	Poor	Poor	U		<10	Nearly dead Advise highways 6m field maple @ base
6	Oak, English	17.5	9	8.5	4	7	2	650	7.8	Mature	Normal	Good	B	2	>40	Asymmetry (major) Ivy clad
7	Oak, English	15	5	7.5	3	5	5	660	7.9	Mature	Poor	Fair	C	2	10+	Dying back (uniform) Ivy smothered Deadwood
8	Oak, English	20	8	12.5	7.5	10	6	1050	12.6	Mature	Moderate	Fair	B	2	20+	Minor deadwood Ivy clad Large dead branches @ crown base
9	Oak, English	18	7	9	7	2	6	790	9.5	Mature	Normal	Fair	B	2	>40	Ivy smothered Asymmetry (major) Lost leader to N @ 8m smothered in ivy
10	Oak, English	14	6	9	6	4	6	700	8.4	Mature	Moderate	Fair	B	2	20+	A sparser than normal canopy Deadwood Ivy smothered; suppressed by neighbours; asymmetry (major)

Site: Longfield House

Date: 21/05/19 and 12/05/2023

Appendix B

BS5837:2012 Tree Survey Schedule

Arbortrack Systems Ltd

07986 122074

Surveyor(s): James Bell

Ref: jwmb/rpt3/longfieldhouse/AIAAMS

Tree No.	English Name	Height	Crown Spread N	S	E	W	Ground Clearance	Stem Diameter	Protection Radius	Age Class	Growth Vitality	Structural Condition	B.S. Cat	Sub Cat	Useful Life	Comments
11	Oak, English	13.5	8	8.5	3	4	2.5	620	7.4	Mature	Normal	Good	B	2	20+	Asymmetry (major) Suppressed by neighbours Ivy smothered
12	Ash, Common	24	9	10.5	8	9	3	800	9.6	Mature	Moderate	Fair	C	2	10+	Minor deadwood throughout Cavity@ 2-3m & 6/7m=jackdaw nest Ivy clad; sparse crown; chalara; larger DWD to SW @ 8m & to W @ 8m
13	Oak, English	18	9	11	12	9	2	1060	12.7	Mature	Normal	Good	A	1,2	>40	Minor deadwood Hung-up (detached) branches Stubs & snags/storm damage
13a	Maple, Field	8.5	3	2	3	2.5	3.5	180 #	2.2	Semi-mature	Normal	Fair	C	2	20+	A sparser than normal canopy Ivy clad RS; 7m E of T12 & N of fence
14	Beech, Common	12	3	2.5	2.5	2.5	2	250	3.0	Semi-mature	Normal	Fair	C	2	20+	
15	Sycamore	8	2	2	2	1	1.5	160	1.9	Semi-mature	Normal	Good	C	2	20+	Ivy clad
16	Cypress, Lawson variety	10	1.5	1.5	1.5	1.5	3	410	4.9	Early Mature	Normal	Good	C	2	20+	Ivy clad

Site: Longfield House

Date: 21/05/19 and 12/05/2023

Appendix B

BS5837:2012 Tree Survey Schedule

Arbortrack Systems Ltd

07986 122074

Surveyor(s): James Bell

Ref: jwmb/rpt3/longfieldhouse/AIAAMS

Tree No.	English Name	Height	Crown Spread N	S	E	W	Ground Clearance	Stem Diameter	Protection Radius	Age Class	Growth Vitality	Structural Condition	B.S. Cat	Sub Cat	Useful Life	Comments
17	Holly	11	2.5	2.5	2.5	2.5	1.5	340	4.1	Early Mature	Poor	Fair	C	2	10+	A sparser than normal canopy Dying back (lead stem /centre)
18	Oak, English	14	5	8	8	7	7	710	8.5	Mature	Normal	Good	B	2	>40	Ivy smothered Minor deadwood 3m from level change
19	Beech, Copper	14	6	6	7	5	6	710	8.5	Mature	Moderate	Fair	B	2	20+	Ivy smothered Deadwood over drive 3m from level change; decay @ trunk base; privately owned
G20	Mixed Species	8	2.5	2.5	2.5	2.5	0	150 #	1.8	Semi-mature	Normal	Good	C	2	20+	Semi mature ash & sycamore Lapsed hedge; consented driveway through this feature Previously consented for removal under separate approval

Site: Longfield House

Date: 21/05/19 and 12/05/2023

Appendix B
Recommended Tree Works

Arbortrack Systems Ltd

07986 122074

Surveyor(s): James Bell

Ref: jwmb/rpt3/longfieldhouse/AIAAMS

Tree No.	English Name	Height	Stem Diameter	Crown Spread				BS Cat	Sub Cat	Recommended Works	Comments / Reasons
				N	S	E	W				
4	Ash, Common	13	230	2	4	3	3	C	2	Previously consented for removal under separate approval	A sparser than normal canopy Chalara Previously consented for removal under separate approval Recommended husbandry 3
5	Oak, English	10	480	2	3	2.5	1.5	U		Previously consented for removal under separate approval	Nearly dead Advise highways 6m field maple @ base Recommended husbandry 2
7	Oak, English	15	660	5	7.5	3	5	C	2	DWD	Dying back (uniform) Ivy smothered Deadwood Recommended husbandry 3
8	Oak, English	20	1050	8	12.5	7.5	10	B	2	DWD	Minor deadwood Ivy clad Large dead branches @ crown base Recommended husbandry 3
9	Oak, English	18	790	7	9	7	2	B	2	DWD	Ivy smothered Asymmetry (major) Lost leader to N @ 8m smothered in ivy Recommended husbandry 3

Site: Longfield House

Date: 21/05/19 and 12/05/2023

Appendix B
Recommended Tree Works

Arbortrack Systems Ltd

07986 122074

Surveyor(s): James Bell

Ref: jwmb/rpt3/longfieldhouse/AIAAMS

Tree No.	English Name	Height	Stem Diameter	Crown Spread N	S	E	W	BS Cat	Sub Cat	Recommended Works	Comments / Reasons
10	Oak, English	14	700	6	9	6	4	B	2	DWD	A sparser than normal canopy Deadwood Ivy smothered; suppressed by neighbours; asymmetry (major) Recommended husbandry 3
12	Ash, Common	24	800	9	10.5	8	9	C	2	Previously consented for removal under separate approval	Minor deadwood throughout Cavity@ 2-3m & 6/7m=jackdaw nest Ivy clad; sparse crown; chalara; larger DWD to SW @ 8m & to W @ 8m To permit development
19	Beech, Copper	14	710	6	6	7	5	B	2	DWD 20% Further Investigation	Ivy smothered Deadwood over drive 3m from level change; decay @ trunk base; privately owned Recommended husbandry 2
G20	Mixed Species	8	150	2.5	2.5	2.5	2.5	C	2	Previously consented for removal under separate approval	Semi mature ash & sycamore Lapsed hedge; consented driveway through this feature Recommended husbandry 3

Appendix B

Notes on Tree Survey Schedule:

- **Height** describes the approximate height of the tree measured in metres from ground level.
- The **Crown Spread** refers to the crown radius in metres from the stem centre and is expressed as an average of **NSEW** aspect if symmetrical.
- **Ground Clearance** is the height in metres of crown clearance above adjacent ground level.
- **Clear Stem Height** is the distance between trunk base and first branch separation measured in metres.
- **Stem Diameter** is the diameter of the stem measured in millimetres at 1.5m from ground level for single stemmed trees. See section 4.6 for details of treatment for multistems.
- **Protection Radius** is a radial distance in metres measured from the trunk centre.
- **Growth Vitality** - **Normal** growth, **Moderate** (below normal), **Poor** (sparse/weak), **Dead** (dead or dying tree).
- **Structural Condition** - **Good** (no or only minor defects), **Fair** (remediable defects), **Poor** - Major defects present.
- **B.S. Category** refers to (British Standard 5837:2012 Table 1) and refers to tree/group quality and value; '**A**' - High, '**B**' - Moderate, '**C**' - Low, '**U**' - Unsuitable for Retention.
- **Sub Cat** refers to the retention criteria values where **1** is mainly **arboricultural** qualities, **2** is mainly **landscape** qualities and **3** is mainly **cultural** values including conservation.
- **Useful Life** is the tree's estimated remaining contribution in years.
- **First Significant Branch (FSB)** is the height of the first significant branch above ground level taken at the trunk separation point.

Notes on Recommended Tree Works:

- **1, 2, 3** Urgent (ASAP), Standard (6-12 months), Non-Urgent (2-3 years)
- **CB** Cut back to boundary/clear from structure
- **CL#** Crown lift to given height in meters
- **CT#%** Crown Thinning by identified %
- **CCL** Crown clean (remove deadwood/crossing & hazardous branches & stubs)
- **CR#%** Crown Reduce by given maximum percentage (of outermost branch & twig length)
- **DWD** Remove deadwood
- **Fell** Fell to ground level
- **FInv** Further Investigation (generally with decay detection equipment)
- **Pol** Pollard or re-pollard
- **Mon** Monitor ongoing condition (annually by staff/owners & every 2-3 years by consultant). Svr Ivy/Clr Bs Sever Ivy/clear base and re-inspect base/stem for concealed defects

Appendix C Tree Protective Fencing Detail (from BS5837:2012)

Figure 2 **Default specification for protective barrier**

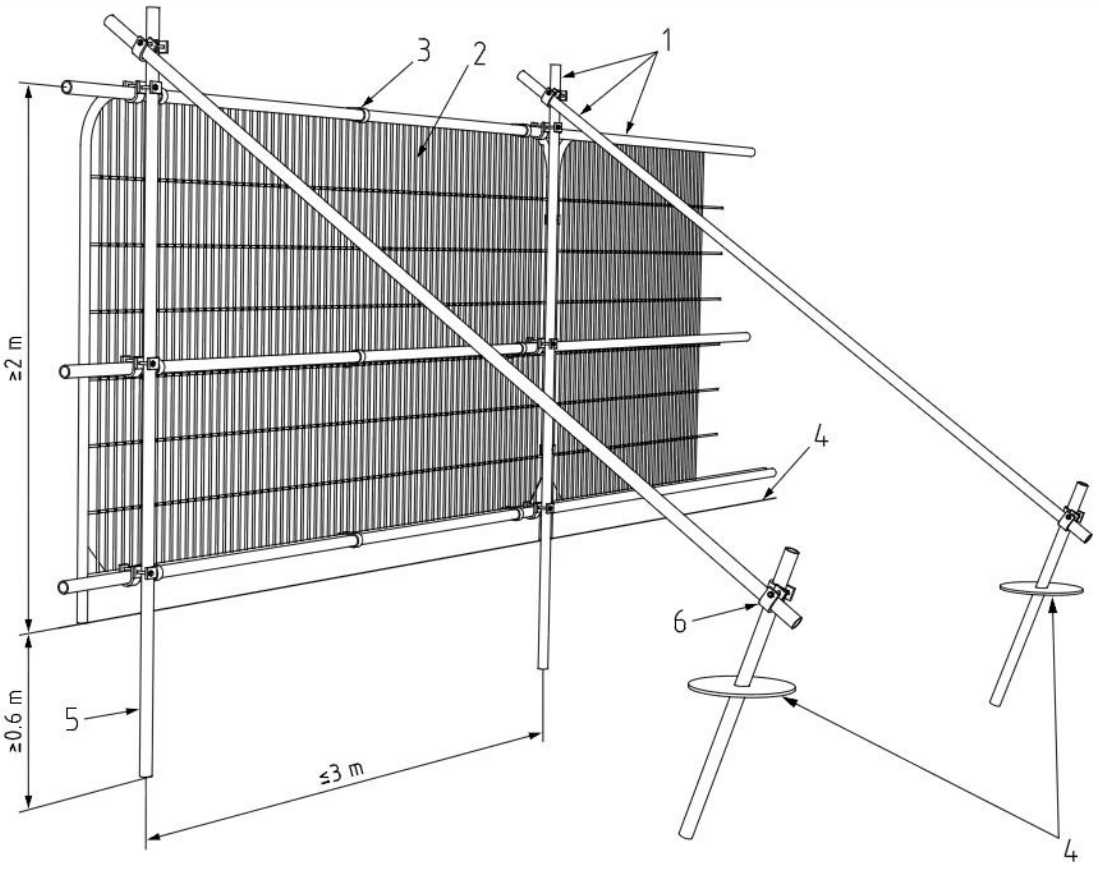

Key

1 Standard scaffold poles
2 Heavy gauge 2 m tall galvanized tube and welded mesh infill panels
3 Panels secured to uprights and cross-members with wire ties
4 Ground level
5 Uprights driven into the ground until secure (minimum depth 0.6 m)
6 Standard scaffold clamps

Figure 3 Examples of above-ground stabilizing systems

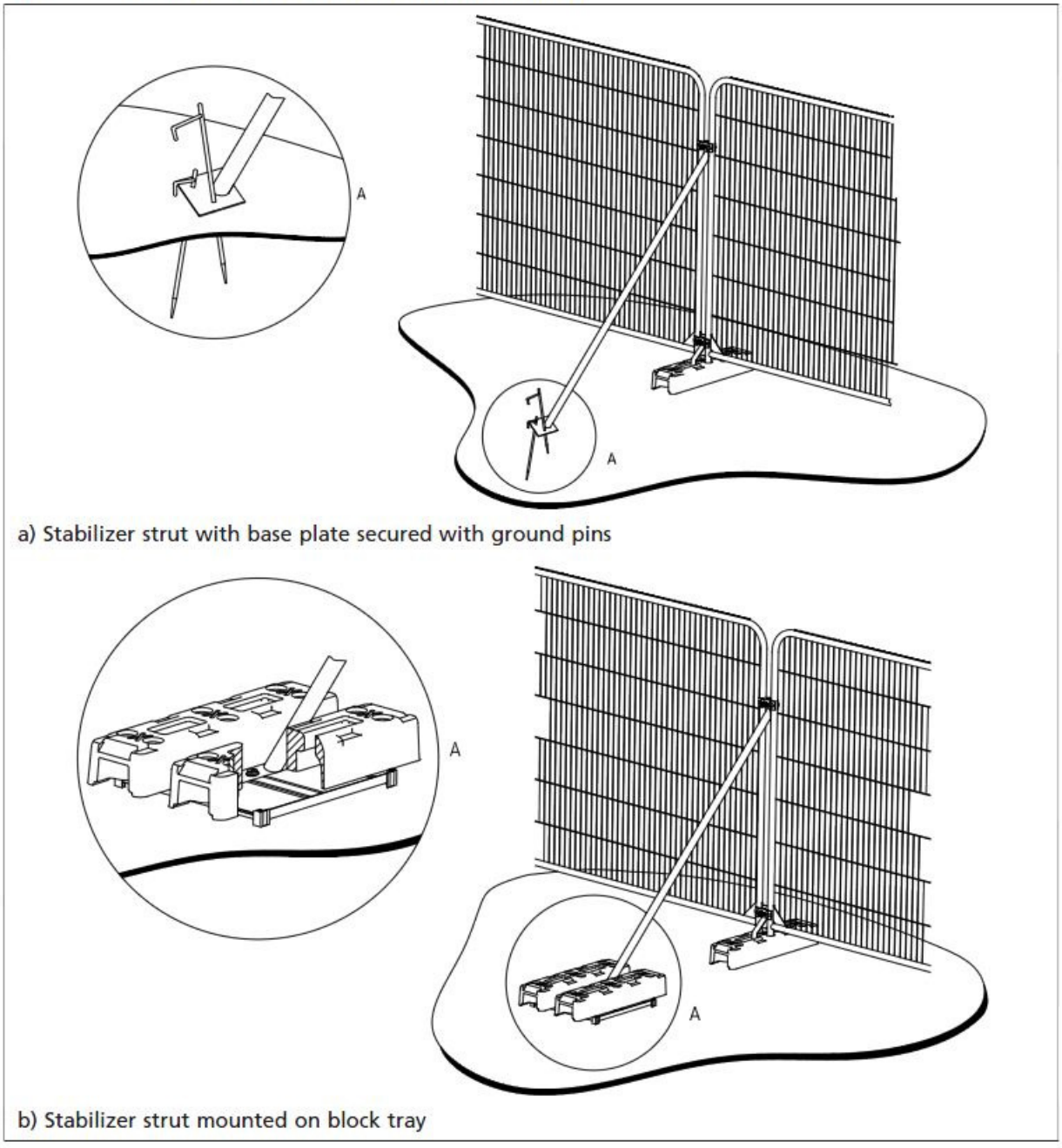

a) Stabilizer strut with base plate secured with ground pins

b) Stabilizer strut mounted on block tray

Appendix D

1.0 Glossary of Terms

Canker	Disease damaged area of a tree, usually caused by fungus or bacteria.
Co-dominant Stem	A stem which has grown in direct competition to the main stem and which has formed a substantial size influencing the appearance of the tree.
Crown Lift	The removal of the lowest branches, usually to a given height. It allows more residual light and greater clearance underneath for vehicles etc.
Crown reduce	The reduction of a tree's height or spread while preserving its natural shape.
Crown thin	The removal of some of the density of a tree's crown**,** usually 5-25% allowing more light through its canopy and reducing wind resistance.
Deadwood	The removal of all dead, dying and diseased branches from a tree. Also, wood which is dead.
Dieback	Where branches are beginning to show signs of death usually at the tips in the crown.
Epicormic shoots	Small branches that grow in uncharacteristic clusters around the base or the stem of a tree, usually as a result of bad pruning or some other stress factor.
Formative pruning	The trimming of a tree to remove weaknesses and irregularities which may lead to problems. The formative pruning operation is aimed at reducing the potential for future weaknesses or problems within the tree's crown.
Included bark	Where the bark on two adjoining branches or stems is growing tightly together, forming a joint with limited physical strength.
Pollarding	A method of tree management in which the main trunk of the tree is cut at about 4m, and the resulting branches are then cropped on a regular basis.
Remedial pruning	The removal of old stubs, deadwood, epicormic growth, rubbing or crossing branches and other unwanted items from the tree's crown. Sometimes referred to as crown cleaning.
Topping	Topping is a form of pruning that removes terminal growth leaving a 'stub' cut end. Topping causes serious health problems to a tree.

2.0 General Guidelines

2.1 All work must be to BS 3998:2010 – Tree work - Recommendations

2.2 Staff carrying out the work must be qualified, experienced and ideally be Arboricultural Association approved contractors, and should be covered by adequate public liability insurance.

2.3 Any defects seen by a contractor or the client that were not apparent to the consultant must be brought to the consultant's attention immediately.

2.4 No liability can be accepted by the consultant in respect of the trees unless the recommendations of this method statement are carried out under the supervision of the designated arboriculturist.

2.5 It is advisable to have trees inspected by designated arboriculturist regularly.