Consulting Civil Engineers

Water Neutrality Report

Marlpost Meadows, Bonfire Hill, Southwater RH13 9BU

For

Mr M Varco

Rev – **P1**

Reference **C2041_B**

Date **8th April 2025**

Revision	Date of Issue	Comments	Prepared By	Checked By
P	03.12.2024	Initial Issue	LH	CS
P1	08.04.2025	Conclusion amended	LT	CS

Richard Cobden House, Lion Street, Chichester, West Sussex, PO19 1LW
Tel: 01243 933253 E: mail@cgscivils.co.uk **W:** www.cgscivils.co.uk

1 Introduction

1.1.1 CGS Civils Ltd has been appointed by Martin Varco to undertake a Water Neutrality Report for a proposed development at Marlpost Meadows, Bonfire Hill, Southwater. The proposed development consists of the construction of a 3-bedroom dwelling. The proposed scheme is an alteration of a previously approved scheme on the same site under DC/22/0495.

1.1.2 The site falls within the Sussex North Water Supply Zone, in which Natural England have written to all authorities within the zone providing a position statement for applications which may place increased pressure on this zone. This explains that recent case law has established that abstraction from the Supply Zone may be having an impact on protected sites (Arun Valley Special Area of Conservations (SAC), Special Protection Area (SPA) and Ramsar site).

1.1.3 As a result, developments within this zone must not add to this impact, as such, the purpose of this report is to therefore provide an overview on the potential water usage changes on the site because of the proposed development, and to confirm that the site is water neutral.

Fig 1. Sussex North Water Supply Zone Area

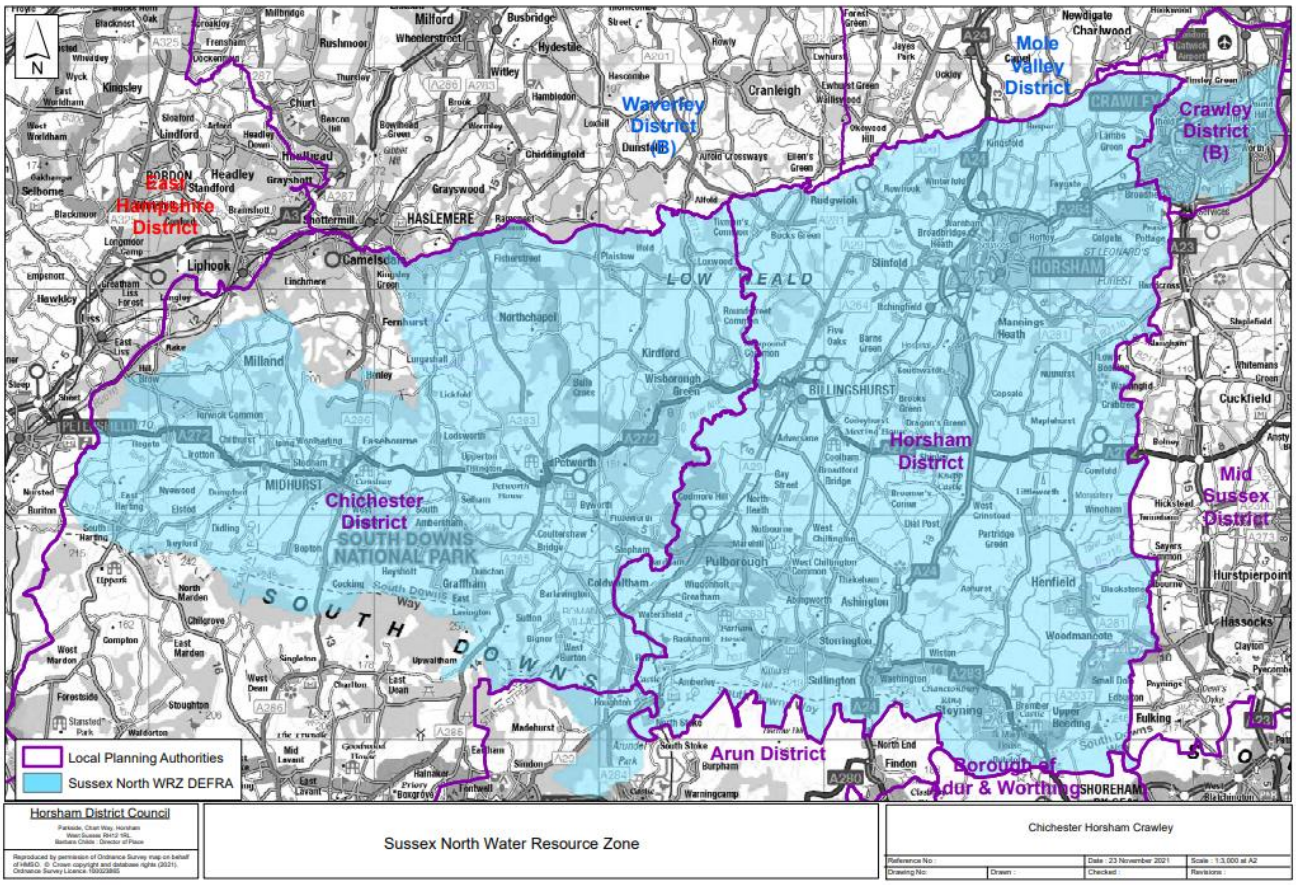

1.1.4 The proposed development is located at OS Grid Reference TQ 14528 26505 and has the post code RH13 9BU.

1.1.5 Waterwise defined Water Neutrality as:

'For every new development, total water use in the region after the development must be equal to or less than the total water uses in the region before the new development.'

1.1.6 Achieving water neutrality involves using a three-step approach. First, the demand for water from the new development must be reduced as far as is practicable, followed by the re-use of water; then the remaining demand should be offset within the region. Following this three-step approach allows the volume that requires offsetting to be reduced which ultimately reduces the cost of the overall scheme. This is noted within the Waterwise neutrality definition, which defines the three steps which should be undertaken in order to achieve water neutrality in their recent review dated January 2021.

- Reduce water demand in the new development through improvement in efficiency.
- Re-use water, wherever possible.
- Offset the remaining water demand from the new development if required.

1.1.7 The report will be split into the following sections:

- A Review of Water Neutrality demand reduction
- A calculation of estimate water usage from proposed development
- Identification of measures that can be first used to reduce this demand.
- Identification of measures that can be used to re-use water.
- Establish solutions to offset that demand in order to achieve neutrality.

1.1.8 This report will follow the methods documented within *'A Review of Water Neutrality in the UK'* carried out by Waterwise in January 2021. The document provides details on how developments can achieve water neutrality by utilising the 3-stage approach.

Fig 2. 3-stage approach

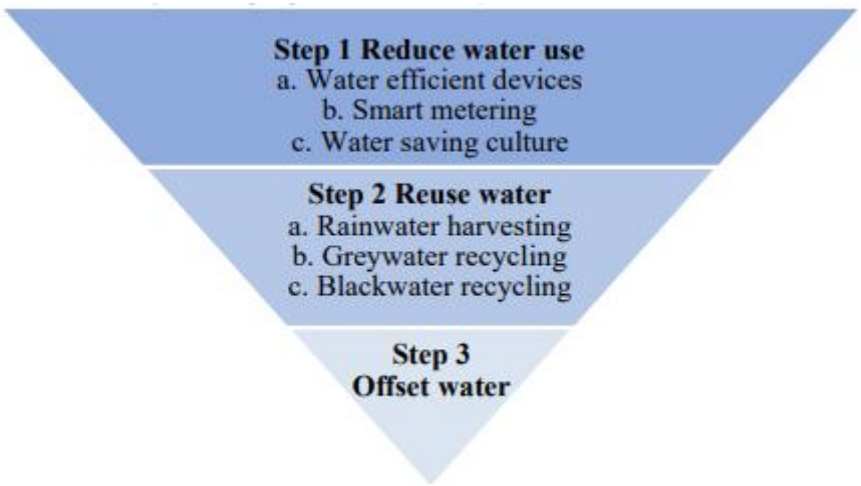

1.1.9 Some increase in water demand within the region from planned development during the local plan period is inevitable. However, it can be minimised by making the site as water efficient as possible.

1.1.10 Per Capita Consumption (PCC) is used as a measure of water use and is the volume of water that is used by one person in one day. It is usually measured in litres per person per day (l/p/d). The average PCC within Southern Water's 'Sussex North Water Resource Zones (WRZ)' is 135 l/p/d. Homes without a water meter consume on average 160 l/p/d and for homes with a water meter, consume on average 131 l/p/d.

1.1.11 Part G of the Building regulations currently states that new build housing should achieve a minimum of 125 l/p/d. A tighter target of 110 l/p/d can be requested if the local authority can establish a clear need based on available evidence.

1.1.12 The table below indicates different demand scenarios including Southern Water's Target 100 Ambition to achieve 100 l/p/d, as well as further scenarios where water demand is cut more dramatically.

Table 1 PCC Demand Scenarios

Demand Scenario	Per Capita Consumption (l/p/d)
British Flows and Loads	150
Building Regulations Standard	125
Building Regulations Optional	110
Target 100	100
Realistic Achievable	85
Ambitious	62

1.1.13 The benefits of water neutrality are wide ranging, from financial and reputational to environment and social. For a new domestic building, they could include:

- **Saving Water** – Over 100,000 litres of water can be saved per year for each water neutral home built.
- **Saving Carbon** – A significant CO2 saving can be achieved by reducing the demand for hot water for baths, showers, basins, dishwashers and washing machines.
- **Saving Money** – Both water and energy bills will reduce.
- **Reducing environmental impact** – Decreasing water abstracted from rivers and groundwater sources.
- **Improved Resilience** – For the future by minimising the additional pressure on water resources.
- **Enabling future housing growth** – In water scarce areas by reducing the impact of new homes and buildings
- **Reducing discharge to sewage** – by using less water, collecting rainwater and recycling greywater, less water is discharged to the drainage network.
- **Short pay-back time** – After approximately 5 years the saving of water neutrality will outweigh the costs of doing so.

2 Executive Summary

2.1.1 The proposed scheme will consist of the construction of a new 3-bedroom chalet style dwelling which is to be constructed adjacent to the existing Marlpost Meadow which consist of a 5-bedroom dwelling and a 1-bedroom annexe.

2.1.2 As proven within this report, the use of water efficient fittings and rainwater harvesting within the proposed dwelling as well as changes that have been made to the existing Marlpost Meadow and the annexe will result in the site being water neutral.

Table 2 Water Usage Comparison

Existing Water usage	473.58 l/day
Proposed Scheme water usage prior to mitigation measures	271.7 l/day
Proposed scheme water usage following mitigation measures	152.2 l/day
Water usage reduced following changes to main house and annexe	155.4 l/day
Water usage for entire site following proposed changes	470.38 l/day
Proposed Scheme water usage equal to or lower than existing site	Yes

3 Calculation of estimated water usage from the proposed development

3.1.1 Before any necessary steps to achieve water neutrality can be determined, the total water demand for the proposed development must first be calculated. The proposed scheme will consist of a new build dwelling to form a 3-bedroom dwelling. In accordance with the average occupancy levels set out by Horsham DC, the population for the property will be 2.47.

Table 3 Average occupancy levels

Number of bedrooms	Average occupancy level
1	1.32
2	1.88
3	2.47
4	2.86
5	3.09

3.1.2 As the proposed property will be a new dwelling, Policy 37 of the Horsham District Planning Framework (HDPF) triggers the requirement for the optional building regulations standard of 110 litres per person per day (l/p/d), therefore:

2.47 x 110 l/p/d
= 271.7l/day

3.1.3 The following sections within this report will cover measures that can be undertaken in order to reduce the water consumption of the proposed property and aim for the 'Ambitious' PCC of 62/l/p/d.

4 Step 1 – Identifying measures that can be used to reduce this demand

4.1.1 The first and most important step in achieving water neutrality will be to ensure that the water used by the proposed development is used as efficiently as possible; the smaller the water demand of the building due to the design and fittings, the less water is needed to be reused and offset. There are a number of ways of achieving a smaller water demand:

- Fitting homes with efficient products, such as:
  - Aerated Taps
  - Aerated Shower heads
  - Low Flush Toilets, or air flush toilets
  - Water efficient white goods
- Installing Smart Meters, this allows the consumer to see how much water they are using, and how this affects their water saving bill. This can help consumers to reduce water usage, identify leaks, and meet water saving targets, with the bonus of reduced bills.
- Designing home to encourage water saving behaviours, this can also help reduce water use and help ensure that other measures that are put in place are effective. Education and awareness are important components of achieving water neutrality.

4.1.2 Building Regulations Part G states that when the new fittings approach is used, the water consumption of the fittings must not exceed a total of 125 l/p/day/. The values are listed in the table 4 below:

Table 4 Maximum Fittings Consumption from Building Regulations Part G

Water Fitting	Maximum Rating
WC	6/4 litres dual flush or 4.5 litres single flush
Shower	10 l/min
Bath	185 litres
Basin Taps	6 l/min
Sink Taps	8 l/min
Dishwasher	1.25 l/place setting
Washing Machine	8.17 l/kilogram

4.1.3 Should the proposed development be required to comply with the optional water efficiency as part of the conditions for planning permission, the estimated consumption of water can be calculated via the Optional requirement level of fittings consumption. This is listed within Building Regulations Part G, which also states that the water consumption must not exceed 110 l/p/day, and the maximum fittings consumption for optional requirement can be found in Table 5 below:

Table 5 Maximum fittings consumption optional requirement level from Building Regulations Part G

Water Fitting	National Base Level
WC	4/2.6 litres dual flush
Shower	8 l/min
Bath	170 litres
Basin Taps	5 l/min
Sink Taps	6 l/min
Dishwasher	1.25 l/place setting
Washing Machine	8.17 l/kilogram

4.1.4 However, to improve on the above requirements, the proposed site can implement the following measures in order to focus on becoming a water efficient development. By installing the following features, the development can achieve a water demand of around 85 l/p/d, which aligns with a 'Realistic Achievable' PCC. See Table 6 below:

Table 6 Water efficient fittings consumption

Water Fitting	Consumption Level
WC	4/2.6 litres dual flush
Shower	7 l/min
Bath	145 litres
Basin Taps	2.5 l/min
Sink Taps	5 l/min
Dishwasher	0.67 l/place setting
Washing Machine	5.5 l/kilogram

Please note that by accepting this report, you accept the low flow rates of the proposed fittings required to achieve water neutrality. CGS Civils cannot be held responsible for any reduced comfort levels that may arise from the use of these fittings.

4.1.5 Water demand can also be reduced through fitting metres, which help to identify leaks and track water consumption as a way to support and encourage behavioural changes such as, not leaving the tap running when brushing teeth and using eco settings on the washing machine and dishwasher. It should be noted that behavioural changes have not been used within the calculations within this report as it is impossible to enforce.

Table 7 Practical Summary of Step 1

Step 1: Reduce Water				
Toilets	Cistern displacement devices (toilet hippos)	Retrofit flush devices to dual flush	Fix leaky toilets	
Taps	Tap inserts (aerators)	Low flow restrictors	Push taps	Infrared Taps
Showers/baths	Low flow shower heads (less than 8litres/min)	Shower timers	Reduced bath frequency & volume	
Outdoors	Hosepipe flow restrictors	Hosepipe siphons	Water butts	Mulches and composting to keep soil moist
Smart Metering	Leakage information	Encourage behavioural changes	Innovative tariffs	Savings estimates

4.1.6 By installing the water efficient devices listed above, it is possible to reduce the water demand on site from **271.7 l/day** down to **219.9 l/day**

2.47 x 89.04 l/p/d

= **219.9 l/day**

- *2.47 (average occupancy level for a 3-bedroom dwelling) x 89.04 (Appendix A – Water Calculator for Proposed fittings)*

5 Step 2 – Identify measures that can be used to re-use water

5.1.1 Once the water demand has been reduced via the installation of water efficient products, water reuse should be considered. The term 'water reused' refers to the capture, treatment (if it is required) and the use of alternative water supplies for non-potable purposes. It includes:

- Rainwater and surface water harvesting
- Greywater recycling (typically the used water from baths, showers and hand basins)
- Wastewater recycling.

5.1.2 The installation of water reusing technology has the potential to save significant amounts of water; for example, 24% of water in the home is used for flushing the toilet and only 4% externally in the garden meaning a water reuse system could save at least a quarter of the demand if it was installed for these purposes. Depending on the quality and the system installed, it could also be possible to re-use water for a washing machine which accounts for 12% of total water usage.

Table 8 Practical Summary of Step 2

Step 2: Reuse Water			
Rainwater Harvesting	Small scale water butt	Rainwater Harvesting system for individual homes and buildings	Large scale surface water harvesting
Greywater Recycling		Small systems for individual homes	Largest scale systems for commercial and mixed-use sites

5.1.3 In this instance, rainwater harvesting is proposed to provide water to the toilets and washing machine within the dwelling. The installation of water reusing technologies will further reduce the water demand on site, depending on the harvesting tank installed. The proposed roof area is sufficient to provide the required water to the property via a rainwater harvesting tank as well as has sufficient capacity for a 35-day drought period. **See Appendix C**.

5.1.4 By installing the water efficient devices listed above as well as the rainwater harvesting technologies listed above, the total demand will be reduced to:

2.47 x 61.6

= 152.2 l/day

- *2.47 (average occupancy level for 3-bedroom dwelling) x 61.6 (Appendix B – Water calculator for proposed fittings with RWH)*

Table 9 Part G rainwater collection calculator

Rainwater Collection Calculation	
Collection Area (m^2)	264
Yield Coefficient	0.8
Depth of rainfall (mm/year)	820
Daily rainwater collection (litres)	474.15
Number of occupants	2.47
Daily Rainwater per person (litres)	191.9

5.1.5 A calculation is to be made to ensure that the rainwater harvested is greater than the rainwater demand within the dwelling. The following is a calculation for 5% of the annual rainwater yield and has been calculated using Rainfall data from the National River Flow Archive which provides annual rainfall data as recorded by the Met office and follows the intermediate approach as detailed within BS 8515:2009.

5.1.6 Using the rainfall catchment data provided by the National River Flow Archives, the closest station point to the site is 41018 – Kird at Tanyards:

Fig 4. Rainwater Station



5.1.7 The latest data available for this station is SAAR 1961-1990, which shows that the depth of rainfall in the area is 820mm.

$$Y_R = A \times e \times h \times n \times 0.05$$

Where:

Y_R = the annual rainwater yield (l)
A = The collecting area (m^2)
e = yield coefficient (%)
h = depth of rainfall (mm)
n = hydraulic filter efficiency

$$\underline{\mathbf{8226.24}} = 264 \times 0.8 \times 820 \times 0.95 \times 0.05$$

5.1.8 In order to ensure there is sufficient roof area, another calculation from BS 8515:2009 must be carried out in order to calculate the annual demand within the property. The following is a calculation for 5% of the annual non-potable water demand.

$$D_N = P_d \times n \times 365 \times 0.05$$

Where:
D_N = the annual non-potable water demand (l)
P_d = The daily requirement per person (l)
n = number of persons

$$1397.4 = 31 \times 2.47 \times 365 \times 0.05$$

5.1.9 To ensure there is sufficient area to allow a 35-day drought storage, an extra 35 days is to be included:

$$\underline{\mathbf{1531.4}} = 31 \times 2.47 \times 400 \times 0.05$$

Fig. 4 Potential Rainwater Harvesting tank locations

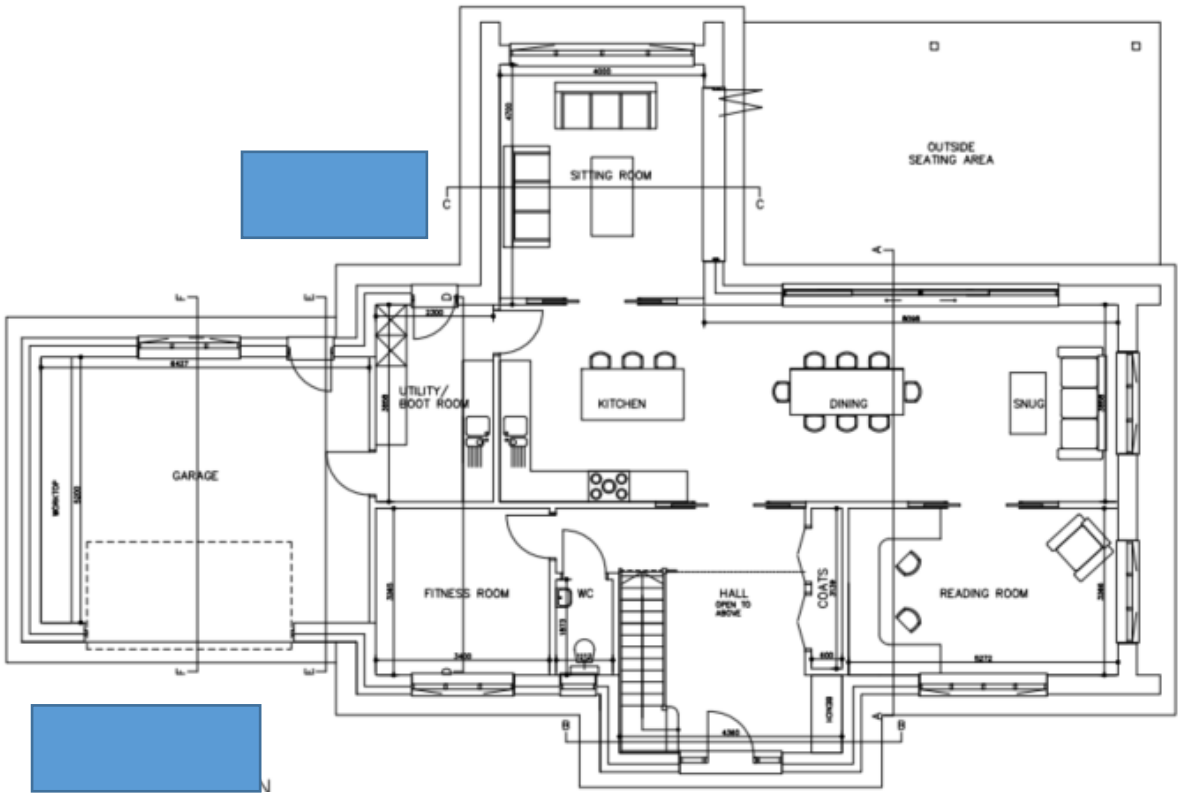

5.1.10 From the above water calculations, we have:

- Proposed water usage rate of 110 litres/person/day based on 'HDPF'
- Which can then be reduced to a proposed water usage rate of 61.6 litres/person/day with water efficient devices and rainwater harvesting

5.1.11 In order to provide a cumulative consumption comparison between the existing and the proposed water usage, the occupancy rates would be for 'as existing' and 'as proposed':

- Proposed water demand from HDPF – 110 l/p/d at an overall occupancy rate 2.47 people = **271.7 l/day.**
- Proposed Water Demand with water efficient devices listed in **Table 6** and Rainwater harvesting – 61.6 l/p/d at an overall occupancy rate of 2.47 people = **152.2 l/day**

5.1.12 The client is willing to install a 5000l rainwater harvesting tank. The harvesting tank is to be fitted with the following equipment:

- Aerator
- Lowara 0.55 kW variable speed booster set
- PREFILT103/4 10" prefilter housing
- CRT10SW-05 5 micro sediment filter
- WH1MH Whole house water filter

5.1.13 The likely contaminants associated with rainwater harvesting systems and how to treat them are:

- Dust – Sediment Filter
- Nitrates – Heavy Metal reduction filter
- Organics – Carbon Filter

5.1.14 It has been confirmed by Silverline UK Ltd that the only maintenance of the system that is required is to replace filters are certain intervals. It is recommended that the:

- Aerator
- Lowara 0.55 kW variable speed booster set
- PREFILT103/4 10" prefilter housing
- CRT10SW-05 5 micro sediment filter is to be replaced every 6 months, or more frequently if it reduced water flow is experienced.
- WH1MH Whole house water filter will require having the filter media replaced every 12 months.

Table 9 Schedule of Example Fittings

Water Fitting	Water Usage	Example Fitting:
WC	4/2.6 litres dual flush	E8967 Sandringham 21
Shower	7 l/min	Hansgrohe Hand Shower Croma S110
Bath	145 litres	Carron Shallow Single Bath
Basin Taps	2.5 l/min	Grohe Eurosmart Cosmopolitan
Sink Taps	5 l/min	Carron Phoenix Pura Plus
Dishwasher	0.73 l/place setting	Bosch SMS6EDI02G
Washing Machine	5.5 l/kilogram	Fisher & Paykel WM1490F1

Please note that the above fittings are examples only. Ensure that your chosen fittings meet the required water usage. All basin and Kitchen taps can be fitted with flow restrictors instead of a reduced flow tap in order to achieve necessary reduced water usage.

5.2 Rainwater Harvesting Tank Maintenance Specification

5.2.1 Rainwater Harvesting Tank

In order to maintain the functioning of the rainwater harvesting tanks, the following maintenance requirements should be adhered to:

Operation and maintenance requirements for rainwater harvesting tanks		
Maintenance Schedule	**Required Action**	**Typical Frequency**
Regular Maintenance	Ensure that all inlets and outlets are clear of debris and blockage	Weekly
	Remove debris inlets and outlets	Weekly
	Inspect first flush diverter to ensure it is working correctly and not clogged	Weekly – Clean if necessary
	Clean Filter screens	Monthly – Replace if damaged
	Inspect the tank for sediment build-up and any signs of algae	Monthly
	Inspect roof and gutters and clear of all debris	Every 3 months
	Inspect pump for any signs of wear or damage and test to ensure it is functioning correctly	Every 3 months
	Check bottom of the tank for sediment build-up and clear if necessary	Every 6 months
	Ensure all downpipes are clear and functioning correctly and clear if necessary	Every 6 months
	Test water	Every 6 months
	Thorough tank cleaning – drain tank, scrub interior and rinse	Annually or as required
	Service the pump and filtration system and replace any worn parts	Annually
	Inspect overflow to ensure it is working correctly and clear any obstructions	Annually
Monitoring	Monitor Water levels	Annually
	Inspect for pests e.g mosquitoes and take measures to prevent	As required

6 Step 3 – Offsetting remaining water demand

6.1.1 The proposed site is to be offset as listed within a previously submitted water neutrality report under planning reference **DISC/24/0199**. The water neutrality report submitted under the previously approved planning application stated that the proposed site is to be offset against the existing 5-bedroom dwelling and 1-bedroom annexe on the existing Marlpost Meadows.

7 Conclusion

7.1.1 To summarise:

- The proposed development will use on average **271.7 l/day** prior to any mitigation techniques.
- This water demand can be reduced to **219.9 l/day** through the installation of water reducing appliances
- Re-using the water through rainwater harvesting tanks can further reduce the water demand down to **152.2 l/day**
- As outlined within the previously submitted water neutrality report under planning reference **DISC/24/0199,** the water demand of the existing 5-bedroom dwelling and the 1-bedroom annexe has been reduced by a total of **155.4 l/day.** This has been accomplished by utilising the methods outlined within the corresponding water neutrality report to 'reduce and re-use' water within the properties.
- As this reduction in water demand exceeds that of the proposed 3-bedroom dwelling, the proposals will become water neutral.

8 Appendices

8.1 Appendix A:

Table 10 – Water Calculator from Building Regulations Part G – Information input from proposed site with water efficient devices from Table 6.

The Water Calculator for New Dwellings with Water efficient measures					
Installation Type	Unit of measure	Volume/ flow rate	Use factor	Fixed use	Litres/person/day
WC (Single Use)	Flush volume (l)	0	4.42	0	0
WC (Dual Flush)	Full Flush Vol.	4	1.46	0	5.84
	Part Flush vol.	2.6	2.96	0	7.696
WC (Multiple Fittings)	Average effective flush volume (l)	0	4.42	0	0
Taps (excl. Kitchen)	Flow rate (l/min)	2.5	1.58	1.58	5.53
Bath (shower also present)	Capacity to overflow (l)	145	0.11	0	15.95
Shower (bath also present)	Flow rate (l/min)	7	4.37	0	30.6
Bath only	Capacity to overflow (l)	0	0.5	0	0
Shower only	Flow rate (l/min)		5.6	0	0
Kitchen sink taps	Flow rate (l/min)	5	0.44	10.36	12.56
Washing Machine	Litres/kg dry load	5.5	2.1	0	11.55
Dishwasher	litres/place setting	0.73	3.6	0	2.62
Waste disposal unit	litres/use	0	3.08	0	0
Water softener	litres/person/day	0	1	0	0
		Total Calculated use (l/p/d)			92.358
		Contribution from greywater (l/p/d)			0
		Contribution from rainwater (l/p/d)			0
		Normalisation factor			0.91
		External water use			5
		Total water consumption (36(1)) (l/p/d)			89.045

8.2 Appendix B:

Table 11 – Water Calculator from Building Regulations Part G – Information input from proposed site with water efficient devices from Table 6 with Rainwater Harvesting.

The Water Calculator for New Dwellings with Water efficient measures					
Installation Type	Unit of measure	Volume/ flow rate	Use factor	Fixed use	Litres/person/day
WC (Single Use)	Flush volume (l)	0	4.42	0	0
WC (Dual Flush)	Full Flush Vol.	4	1.46	0	5.84
	Part Flush vol.	2.6	2.96	0	7.696
WC (Multiple Fittings)	Average effective flush volume (l)	0	4.42	0	0
Taps (excl. Kitchen)	Flow rate (l/min)	2.5	1.58	1.58	5.53
Bath (shower also present)	Capacity to overflow (l)	145	0.11	0	15.95
Shower (bath also present)	Flow rate (l/min)	7	4.37	0	30.6
Bath only	Capacity to overflow (l)	0	0.5	0	0
Shower only	Flow rate (l/min)		5.6	0	0
Kitchen sink taps	Flow rate (l/min)	5	0.44	10.36	12.56
Washing Machine	Litres/kg dry load	5.5	2.1	0	11.55
Dishwasher	litres/place setting	0.73	3.6	0	2.62
Waste disposal unit	litres/use	0	3.08	0	0
Water softener	litres/person/day	0	1	0	0
		Total Calculated use (l/p/d)			92.358
		Contribution from greywater (l/p/d)			0
		Contribution from rainwater (l/p/d)			30.086
		Normalisation factor			0.91
		External water use			5
		Total water consumption (36(1)) (l/p/d)			61.66

8.3 Appendix C:

Rainwater Harvesting Tank Size Calculator:

COLLECTABLE ROOF AREA (M²)

Main Building	Width:		Length:		Rain Collection Area:	0 m²
Extension one	Width:		Length:		Rain Collection Area:	0 m²
Extension Two	Width:		Length:		Rain Collection Area:	0 m²
Extension Three	Width:		Length:		Rain Collection Area:	0 m²
Or the total roof area, if you already know it:				264	Total area of collectable roof space:	264 m²
Select Your Region		England SE & Central			Average rainfall per year in your region:	64 L
Collectable rainwater per annum in litres - discounted by 20% to account for water loss						**135168 L**

USE OF RAINWATER IN THE BUILDING

	people:	bedrooms:	
Number of people or bedrooms in the building -	2.47	0	
✓ Number of clothes washing cycles per day (*50 litres each*)	0.50 Cycles	25.00	L
✓ Number of toilet flushes per day (*4.42 flushes per person, average 5 litres each*)	8.84 Flushes	44.20	L
Outdoor use in litres, per person per day (*recommended 5 litres per person per day*)	5	10.00	L
Amount of water you require every day		79.2	L
Amount of water you require every year	**DEMAND**	**28908**	**L**

FINAL FIGURES

How many days drought protection do you need? Typically 21 (18 minimum)	35	
Capacity of water storage in litres required for drought protection	2772.00	L
The lesser of YIELD (blue) or DEMAND (green) per annum	28908	L
Therefore, volume of rainwater storage required	**2772**	**L**

CONCLUSION

Is there sufficient roof water available:		YES
Recommended tank size from our shallow dig range:	F-Line Range:	3000 LITRE F-LINE TANK

8.4 Appendix D:

Example Rainwater Harvesting Tank Brochure:

Carat Rainwater Harvesting solutions



RAINWATER HARVESTING

WASTEWATER SYSTEMS

RAINWATER RETENTION

DRINKING WATER RESERVOIRS

Edition 2007
Salesfolder C 27-2 Carat EN

Benefits of the Carat System

Flexible, stackable, user-friendly and better for the environment

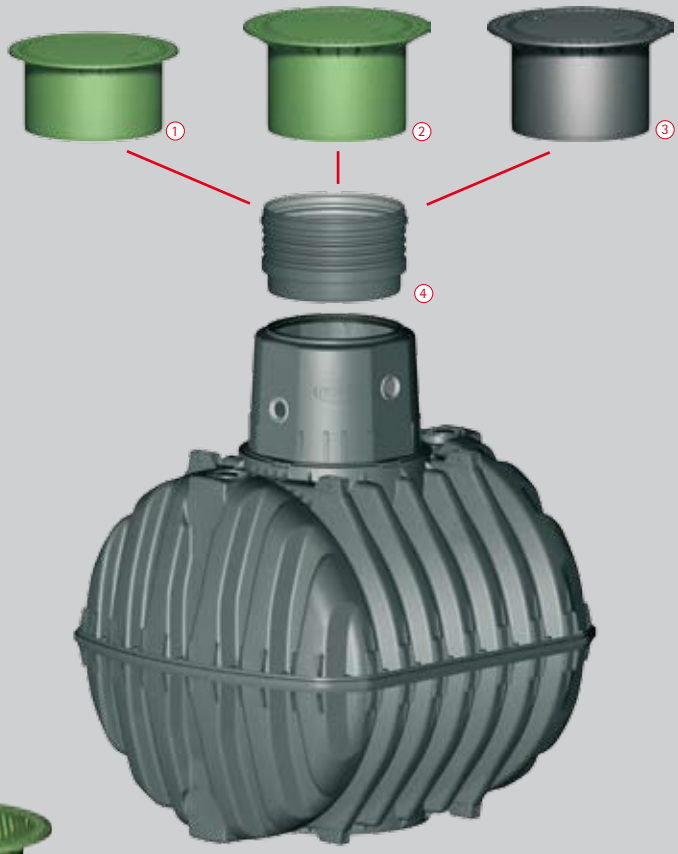

① **Mini telescopic dome shaft with PE lid**
Designed for non-vehicle loading and ideal for garden use, the shaft can be adjusted from 750 - 950 mm and tilted up to 5% to sit flush with the ground level. Includes a PE lid with child safety lock. This item is supplied in green.

② **Maxi telescopic dome shaft with PE lid**
Designed for non-vehicle loading and ideal for the Complete Package (Eco-Plus), the shaft can be adjusted from 750 - 1,050 mm and tilted up to 5% to sit flush with the ground level. Includes PE lid with child safety lock. This item is supplied in green.

③ **Vehicle loading telescopic dome shaft with cast iron lid**
Designed for vehicle loading applications, the tank can be adjusted from 750 -1,050 mm and tilted up to 5% to sit flush with the ground level. Includes child-safe cast iron cover. This item is supplied in dark grey.

④ **Extension**
For use with the telescopic dome shaft to increase the height of the lid from 1,000 - 1,500 mm. Always refer to installation instructions when usig this item.





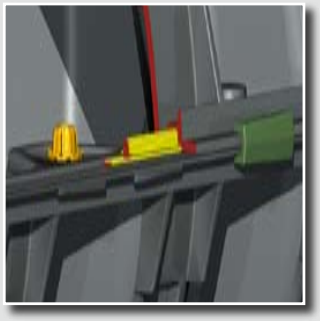

Logistical advantages of the Carat

The Carat tank consists of two half shells which can be stacked on top of each other, allowing multiple tanks to be stacked on a single pallet for shipping. For example, it is possible to stack five 6,500 ltr Carat tanks, or nine 2,700 ltr Carat tanks on a single pallet. This allows a standard 40 ft. shipping container to house a total tank volume of up to 130,000 ltrs! The tanks unique stacking feature directly reduces transport costs and environmental impact from vehicle emissions, whilst allowing shipments to any destination in the world.

Easy and safe assembly

- The patented quick connection (illustrated in green), allows the Carat tank to be assembled without screws in only few minutes. Disassembly is possible at any time.
- The first-class EPDM material used in the profile sealings (illustrated in yellow), has been laboratory tested to last more than 25 years.
- The centering bolt (illustrated in orange) assures the accurate and easy assembly of the two half shells preventing any leaks

The Carat

The first Rainwater underground tank of its kind!

NEW

Unique manufacturing process

The GRAF Carat underground tank is unlike any other underground tank in the world. It is the largest tank of its kind to be manufactured by injection compression moulding. This technique provides the tank with unbeatable stability and ensures that each component is produced with the highest of accuracy.

Unlike other underground tanks, the wall thickness is equal in all areas of the tank. The production tolerances are kept to a minimum, resulting in a product of the highest quality, which is strong, accurate, reliable and extremely user-friendly.

To manufacture the Carat range, one of the worlds largest injection moulding systems had to be developed.

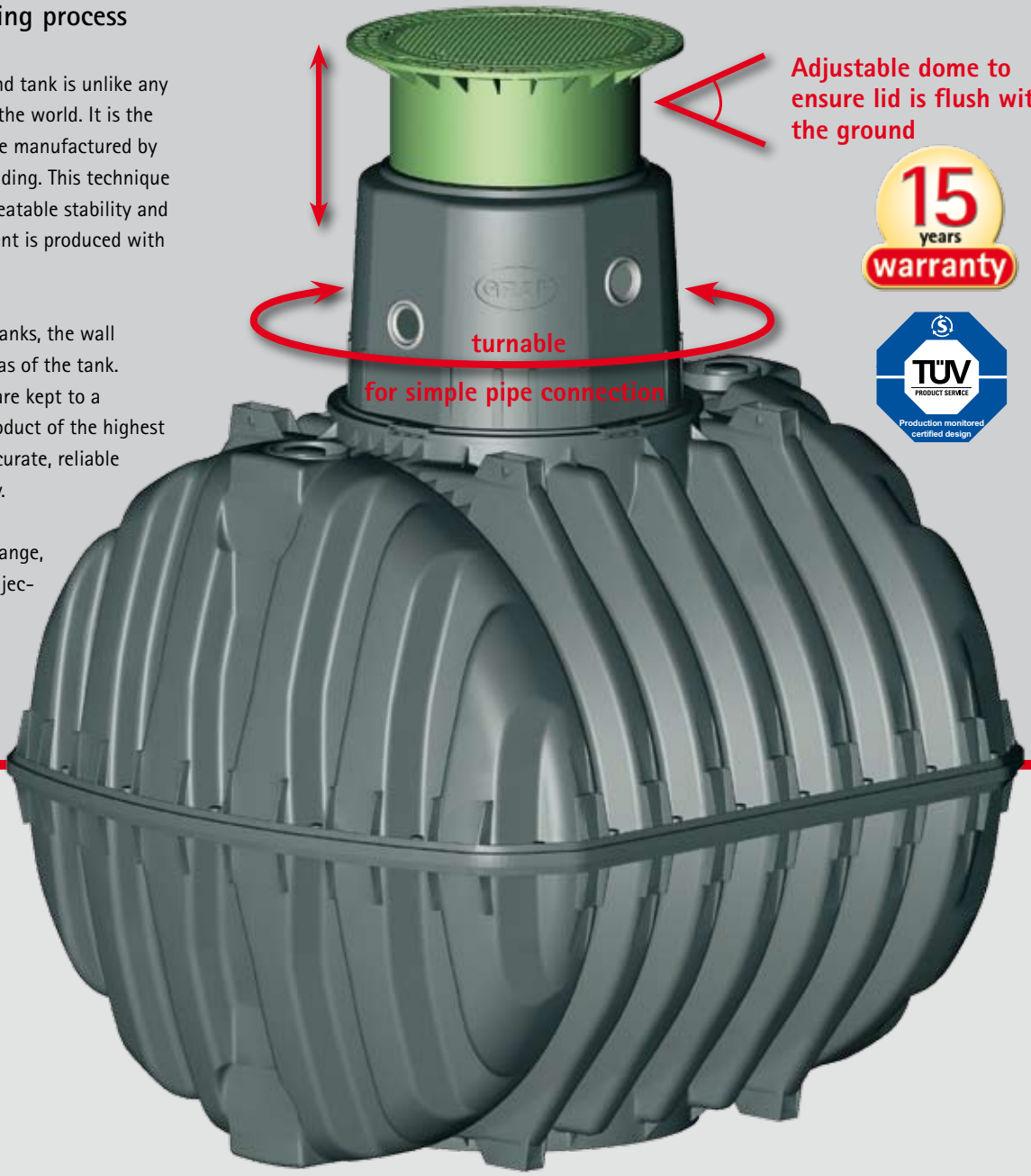

The Carat underground tank is made from Duralen®, a high quality material that is extremely rigid and impact resistant, therefore ideally suited for producing underground tanks. With very low warping characteristics and high stiffness, this material provides high stability and a unique life expectancy. Duralen® can also be easily recycled which reduces waste and environmental impact.

Duralen®

The modular Carat system

Choose your tank size

NEW

Carat, vehicle bearing underground tank

Size 2,700 – 13,000 litres
(700 – 3,400 US-Gallons).
Designed to be used in conjunction with the vehicle loading telescope dome shaft. The access dome is designed in accordance to DIN testing.

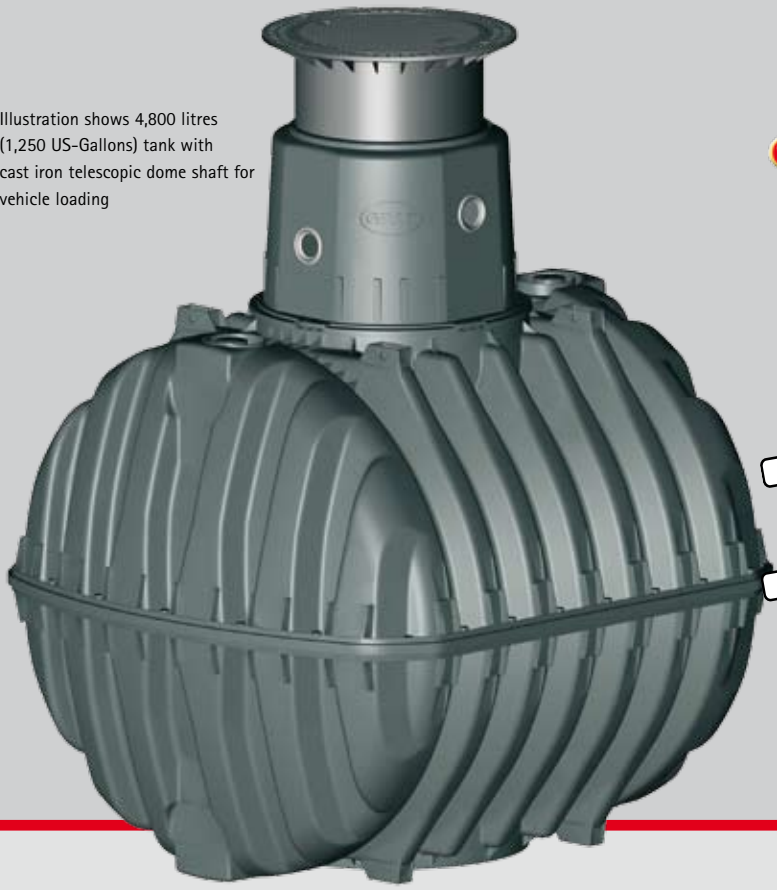

Illustration shows 4,800 litres (1,250 US-Gallons) tank with cast iron telescopic dome shaft for vehicle loading

15 years warranty

EINSTIEGSDOM nach DIN EINSTIEGSDOM

TÜV

European 0870877 Patent

US 5878907 Patent

Volume

Litres	US-Gallons
2,700	700
3,750	1,000
4,800	1,250
6,500	1,700
7,500*	2000*
9,600*	2,500*
13,000*	3,400*

* Set consisting of two Carat underground tanks

Technical data

Dimensions/weight	2,700 L 700 US-Gallons	3,750 L 1000 US-Gallons	4,800 L 1,250 US-Gallons	6,500 L 1,700 US-Gallons	7,500 L* 1,850 US-Gallons	9,600 L* 2,500 US-Gallons	13,000 L* 3,400 US-Gallons
Length	2,080 mm (81.9 inches)	2,280 mm (89.8 inches)	2,280 mm (89.8 inches)	2,390 mm (94.1 inches)	Set consisting of two Carat underground tanks		
Width	1,565 mm (61.6 inches)	1,755 mm (69.1 inches)	1,985 mm (78.1 inches)	2,190 mm (86.2 inches)			
Heigth (including tank dome)	2,010 mm (79.1 inches)	2,200 mm (86.6 inches)	2,430 mm (95.7 inches)	2,710 mm (106.7 inches)			
Height of tank dome	610 mm (24.0 inches)						
Internal Ø tank dome	800 mm (31,5 inches)						
Weight	120 kg (265 lbs.)	150 kg (331 lbs.)	185 kg (408 lbs.)	220 kg (485 lbs.)			
Load							
Max. axle load	Car-bearing				see 3,750 L tank	see 4,800 L tank*	see 6,500 L tank*
Earth covering	800 - 1,200 mm (31.5 - 47.2 inches)						
Groundwater							
Groundwater stable	up to the middle of the tank				see 3,750 L tank	see 4,800 L tank	see 6,500 L tank
Required earth covering	800 mm (31.5 inches)						



For dimensions see 3,750 L tank*



For dimensions see 4,800 L tank*



For dimensions see 6,500 L tank*

Garden Comfort package

The simple garden solution with submersible pump system



Carat Garden Comfort underground tank package

- Simple to install and use
- Use a simple hose connection socket and pressure sensitive pump for automatic water activation, purposely designed for the Gardena® system
- Low visual impact
- Reduces electricity consumption by using a pressure drop activation system, so that electricity is only used when required

Scope of supply

① Carat underground tank
② Mini telescopic dome shaft for pedestrian loading with an adjustable PE lid
③ Filter package 2, consisting of:
- Internal Universal Filter 3
- Inflow stilling system for controlling the water inflow
- Overflow siphon and rodent guard
- Spannfix pipe connection sleeve

④ Garden Comfort pump package, consists of:
- Integra-Duo® 1100 Submersible pump, with protection against dry running and automatic Start / Stop function
- Floating water extraction unit
- Water hose connection box
- 10 m of pressure hose

Volume

Litres	US-Gallons
2,700	700
3,750	1,000
4,800	1,250
6,500	1,700
7,500*	2,000*
9,600*	2,500*
13,000*	3,400*

* Set consisting of two Carat underground tanks

Vehicle loading version available on request

Eco-Plus package

The ideal solution for use in the home and garden

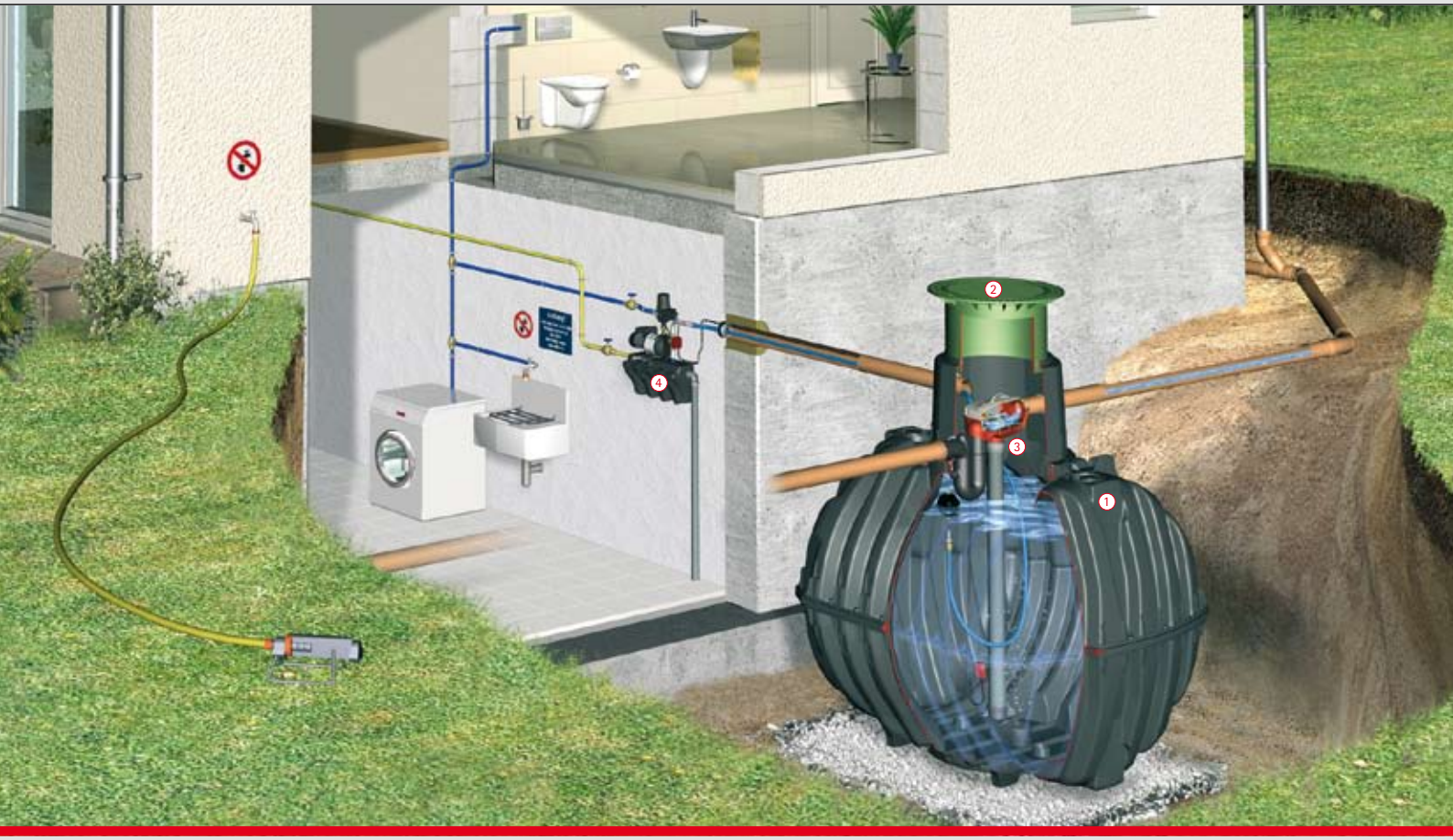

Carat underground tank package Eco Plus

- Economic package solution
- Patented filter technology and in-house pump system with automatic switch-over to mains water supply
- Easy to assemble due to modular components
- Float switch controlled
- Only one cover viewable on the surface

Scope of supply

① Carat underground tank
② Maxi telescopic dome shaft for pedestrian loading with an adjustable PE lid
③ Filter package 3, consisting of:
- Internal Optimax-Pro (self-cleaning) filter
- Inflow stilling system for controlling the water inflow
- Overflow siphon and rodent guard
- Spannfix pipe connection sleeve

④ Eco-Plus pump package consists of:
- Water supply control unit
- Floating water extraction unit
- DN 100 wall duct
- Labelling set
- Suction pipe

Volume

Litres	US-Gallons
3,750	1,000
4,800	1,250
6,500	1,700
7,500*	2,000*
9,600*	2,500*
13,000*	3,400*

*Set consisting of two Carat underground tanks

Vehicle loading version available on request

Internal filter technology

NEW

Efficient cleaning system with high water yield

Optimax Pro, self-cleaning Filter

Advantages

- Provides over 95% water yield
- Utilises patented, high quality filter technology
- Low-maintenance (self-cleaning)
- TÜV-tested to German standards
- Space-saving filter technology inside the tank
- Filter housing can be easily removed without the need for tools
- Transparent lid for filter visibility
- **Can manage roof areas up to 350 m²**
- Standard 100 mm connections
- Self cleaning Opticlean system available as an optional extra
- Low offset height of 165 mm between inlet and outlet



Universal Filter 3

up to 100% water yield

Advantages

- Allows up to 100% water yield
- Ideal for small roof surfaces
- Space-saving filter technology inside the tank
- The Filter housing can be easily removed without the need for tools
- Ideally suited when connecting the tank to a soakaway
- 250 mm offset height between inlet and outlet
- **Can manage roof areas up to 350 m²**
- Standard 100 mm connections
- Emergency overflow system available (optional extra)

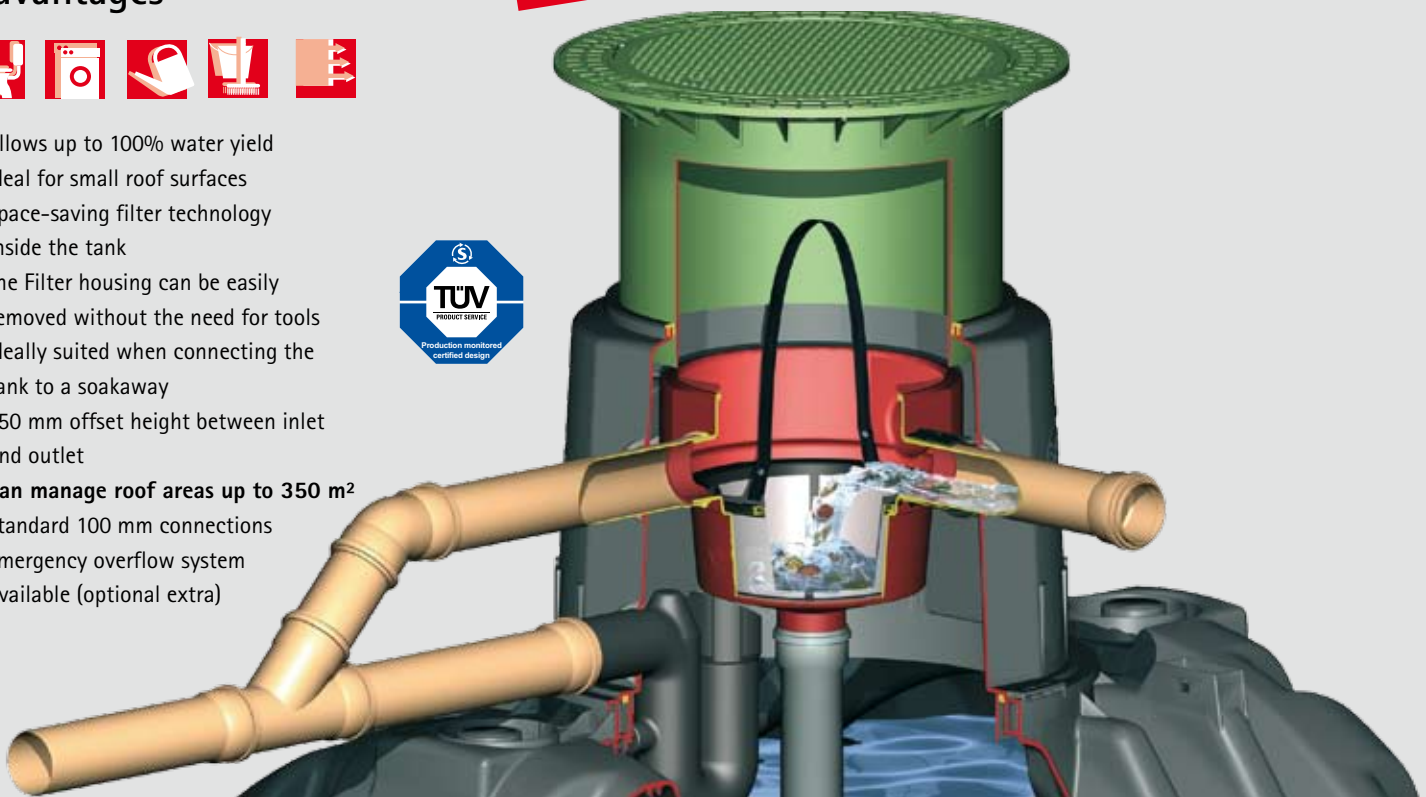

GRAF – Setting the standards in quality



Production site at Teningen (Germany) near Freiburg



Production site at Dachstein (France)

High Quality Manufacturing

GRAF has invested more than € 20 million in a new production site specially set up for the new CARAT range. The new facility has an approximate surface area of 155,000 m² - that equals 31 football pitches - one of the most modern production facilities for plastic products in the world

For over 40 years, Otto Graf GmbH has been offering high-class plastic products to its customers. In 1974 GRAF developed its first pioneering range of rainwater harvesting products. Now GRAF is recognised as Germany's number one rainwater harvesting brand and proudly presents the new premium Carat range of the tanks. A range which is manufactured in one of the most modern and efficent plastic manufacturing facilities in the world!

RAINWATER HARVESTING



STORMWATER MANAGEMENT



AGRICULTURAL CONTAINERS



SEWAGE TREATMENT PLANTS



Warranty clause:
The warranty mentioned in this brochure only refers to the tank in question and not to the accessories. Within the warranty period we grant free replacement of the material. Further benefits are excluded. Pre-condition for warranty benefits are proper handling, assembly and installation according to the mounting guidelines.

N.B. Protect tanks from frost when installed above-ground! In case of groundwater installation, please contact us for further information previous to the purchase!

For all indications of measurements in this brochure we reserve a tolerance of +/- 3%. The useful volume of the tanks may be up to 10% lower than the tank capacity, according to the connecting option.

Technical modifications and further development of the different products are subject to change. Errors excepted.

Otto Graf GmbH
Kunststofferzeugnisse
Carl-Zeiss-Straße 2-6
79331 Teningen / Germany

Phone: +49 (0) 76 41/5 89-0
Fax: +49 (0) 76 41/5 89-50
info@graf-online.de
www.graf-online.de

Over 40 years of quality and innovation

© Otto Graf GmbH, Teningen. Germany
Reproduction – also in extracts – only with written authorisation.

8.5 Appendix E:

Potential Washing Machine data sheet – Fisher & Paykel WM1490F1 9kg:

Model	Cycle	Temp. (°C)	Load (kg)	Program Time On Display (min)	Remaining Moisture Content (%)	Energy Consumption (kWh/Cycle)	Water Consumption (L/Cycle)
WM1490F	Cottons Eco*	60	9	198	47	0.67	50
	Cottons	40	9	138	56	1.17	84
	Everyday	40	8	59	48	0.81	96
	Heavy	60	8	130	48	2.19	115
	Synthetic	40	4	121	40	0.98	53
	Delicate	40	4	45	65	0.70	65
	Sports	40	4	50	43	0.55	56

8.6 Appendix F:

Dish Washer Data Sheet – Bosch SMS6EDI02G:

Product information sheet COMMISSION DELEGATED REGULATION (EU) 2019/2017				
Supplier's name or trade mark [a] [b] :	Bosch			
Supplier's address [a] [b] :	BSH Hausgeräte GmbH, Carl-Wery-Str. 34, 81739 Munich, Germany			
Model identifier [a] :	SMS6EDI02G			
General product parameters:				
Parameter	Value	Parameter	Value	
Rated capacity [d] (ps)	13	Dimensions in cm [a] [b]	Height	85
			Width	60
			Depth	60
EEI [d]	44	Energy efficiency class [d]	C [c]	
Cleaning performance index [d]	1.121	Drying performance index [d]	1.061	
Energy consumption in kWh [per cycle], based on the eco programme using cold water fill. Actual energy consumption will depend on how the appliance is used.	0.736	Water consumption in litres [per cycle], based on the eco programme. Actual water consumption will depend on how the appliance is used and on the hardness of the water.	9.5	
Programme duration [d] (h:min)	4:35	Type	Freestanding	
Airborne acoustical noise emissions [d] (dB(A) re 1 pW)	46	Airborne acoustical noise emission class [d]	C [c]	
Off-mode (W) (if applicable)	-	Standby mode (W) (if applicable)	0.50	
Delay start (W) (if applicable)	4.00	Networked standby (W) (if applicable)	2.00	
Minimum duration of the guarantee offered by the supplier [a] [b] :			24 months	
Additional information [a] [b] :				
Weblink to the supplier's website, where the information in point 6 of Annex II to Commission Regulation (EU) 2019/2022 is found: www.bosch-home.com/energylabel				