From: Gerald Moore <geraldmooreriba@me.com>
Sent: 13 March 2024 13:47
To: Tamara.Dale
Subject: Re: DISC/23/0256 - Coolham House Cottage, Billingshurst Road
Attachments: 17f3c288c2d7b659343f9c503518402d2ba4f8cd.pdf

Follow Up Flag: Follow up
Flag Status: Completed

Tamara

Thank you for your patience.

I have included below alternative links for the amended fittings. The fittings are intended to work at the 0.5 bar pressure but can work as low as 0.2 bar.

Basin taps at 0.5 bar:
https://www.heatandplumb.com/acatalog/bristan-saffron-tap-saf-es-smbas-blk

Bath:
https://www.qssupplies.co.uk/bathroom-furniture-shower-taps/161898.htm

Shower: 7l/min set in the mira app.
https://www.mirashowers.co.uk/p/showers/shop-digital-and-smart-showers/mira-platinum-dual-rear-fed-low-pressure-11981005?skuId=1.1981.005

Kitchen tap:
Please see tech spec sheet attached below.

Many thanks.

Gerald

> On 12 Mar 2024, at 07:42, Tamara.Dale <Tamara.Dale@horsham.gov.uk> wrote:
>
> Dear Gerald,
>
> Thank you for your email.
>
> When reviewing specifications under a DISC application we review the listed volume provided within the manufacturer details/specifications for the product given. As such, I would suggest that you and the Applicant review the specification of proposed fixtures/fittings provided by the manufacturer to confirm they meet the defined flow rates/volume size contained within the Part G Calculator provided within the approved Water Neutrality Statement.
>
> I hope this is of assistance,

Kind regards,

Tamara

Tamara Dale
Principal Planning Officer

Telephone: 01403 215166
Email: Tamara.Dale@horsham.gov.uk

Horsham District Council

Horsham District Council, Parkside, Chart Way, Horsham, West Sussex RH12 1RL
Telephone: 01403 215100 (calls may be recorded) www.horsham.gov.uk Chief Executive: Jane Eaton

Disclaimer

IMPORTANT NOTICE This e-mail might contain privileged and/or confidential information. If you have received this e-mail in error, please notify the sender and delete the e-mail immediately; you may not use or pass it to anyone else. Whilst every care has been taken to check this outgoing e-mail for viruses, it is your responsibility to carry out checks upon receipt. Horsham District Council does not accept liability for any damage caused. E-mail transmission cannot guarantee to be secure or error free. This e-mail does not create any legal relations, contractual or otherwise. Any views or opinions expressed are personal to the author and do not necessarily represent those of Horsham District Council. This Council does not accept liability for any unauthorised/unlawful statement made by an employee. Information in this e mail may be subject to public disclosure in accordance with the law. Horsham District Council cannot guarantee that it will not provide this e mail to a third party. The Council reserves the right to monitor e-mails in accordance with the law. If this e-mail message or any attachments are incomplete or unreadable, please telephone 01403 215100 or e-mail contact@horsham.gov.uk. Any reference to "e-mail" in this disclaimer includes any attachments.

This email has been scanned for viruses and malware, and may have been automatically archived by **Mimecast Ltd**.

Gerald Moore RIBA
1 Exmoor Crescent
Worthing

West Sussex
BN13 2PL

Tel: 01903 609607
Mob: 07793 00 44 62

This e-mail is from Gerald Moore RIBA Chartered Architect and is intended only for the addressee named above. This email may contain confidential or privileged information. If you are not the named addressee or the person responsible for delivering the message to the named addressee, please advise the sender by return email and delete it from your system. The contents should not be disclosed to any other person nor copies taken. The recipient is responsible for checking this email and any attachments for viruses. Gerald Moore RIBA Chartered Architect accepts no liability for any damage caused by any virus transmitted by this email.

The copyrights of all attached files on this email are the property of Gerald Moore RIBA Chartered Architect and may be used in connection with the project for which it was prepared.

Athena Chrome | 115.0311.211

FAMILY : **Taps** | SERIES : **Athena** | MODEL : **Athena** | FINISH : **Chrome** | INSTALLATION TYPE : **Sink/Worktop**



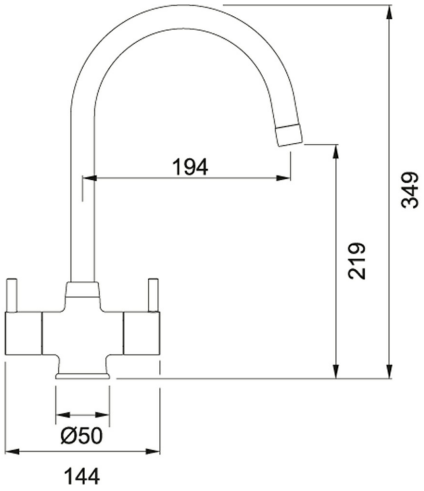

TECHNICAL DATA	
Version	Swivel Spout
Handle Width	144.00 mm
Height Overall	349.00 mm
Height to End of Spout	219.00 mm
Spout reach	194.00 mm
Hot Flow Rate at 0.3 bar	5.00 litres/min
Price	£165.00