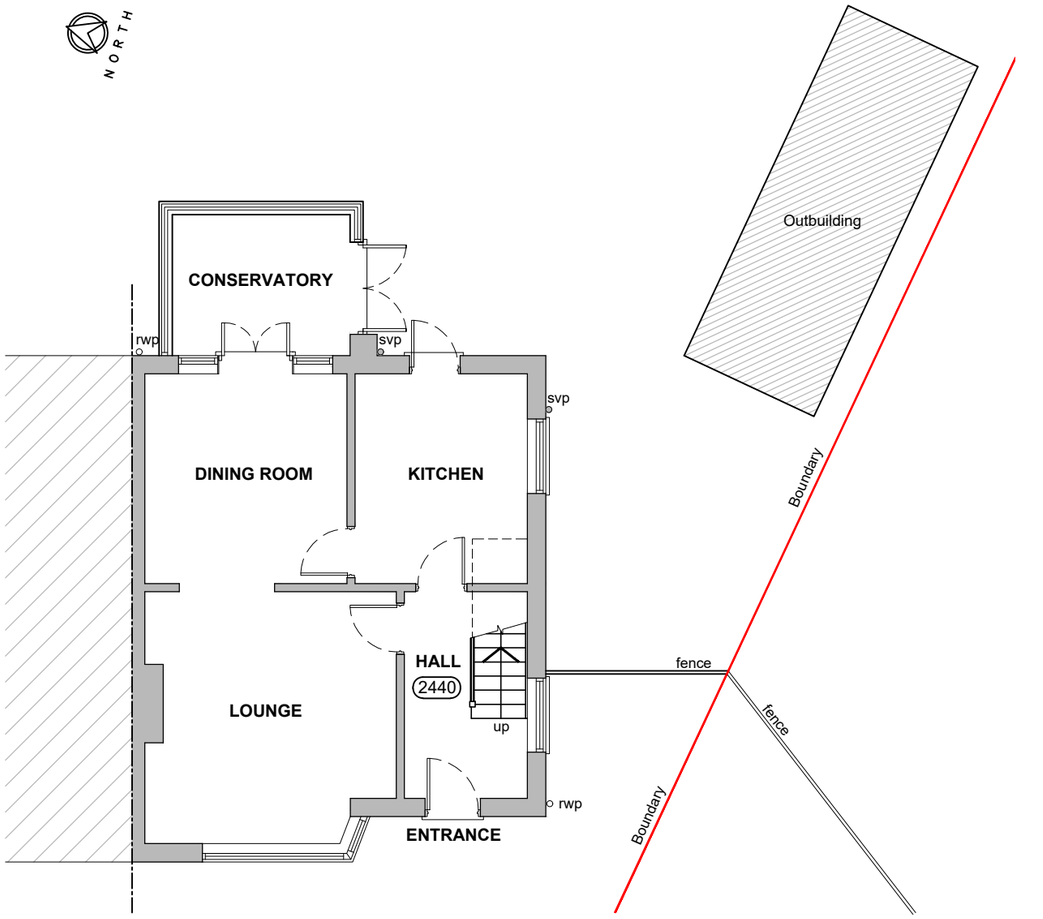

EXISTING GROUND FLOOR PLAN

SCALE 1:100

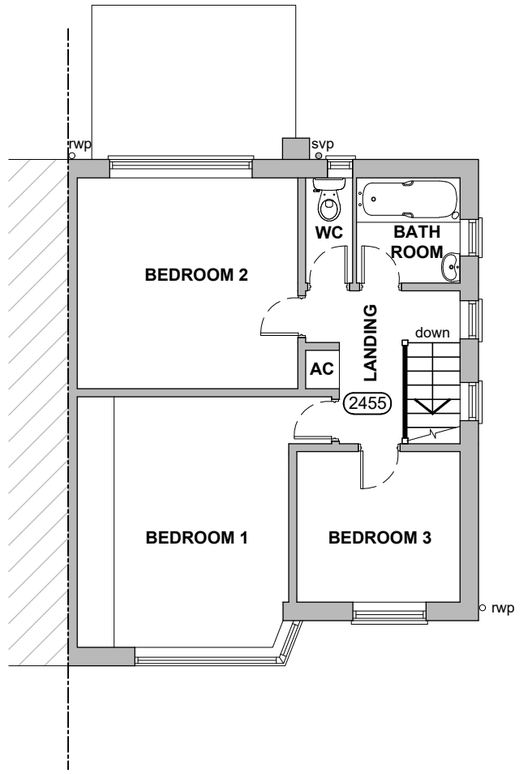

EXISTING FIRST FLOOR PLAN

SCALE 1:100

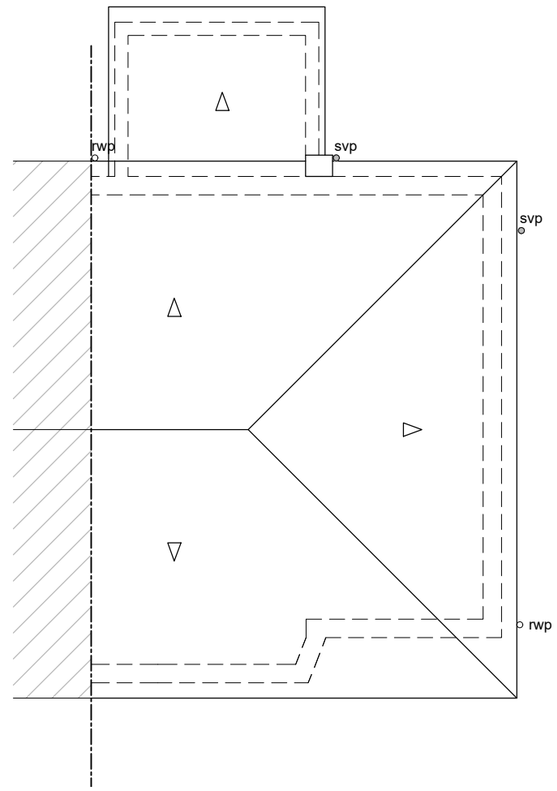

EXISTING ROOF PLAN

SCALE 1:100

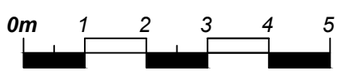

Scale Bar 1:100

Copyright reserved.
This drawing may only be used for the client and location specified in the title block. It may not be copied or disclosed to any other third party without prior written consent from DMA Building Designs. Prior to any works commencing on site, DMA Building Designs is to be contacted regarding the current status, revision or regulatory approval of this drawing.

1. The works shown have been drawn for submission to the local planning authority and are not to be used for construction.
2. No works shall commence until planning approval has been given by the local authority.
3. No works to commence without either full plans building control approval or a building notice served with the local authority.
4. The dimensions indicated are approximate and subject to site checks by the contractor prior to commencement.
5. DMA Building Designs accept no responsibility for any unknown factors which either preclude the works from construction or add additional costs, ie location of public sewers and underground services, abnormal foundation designs, due to trees, ground conditions or any underground structure or obstruction. condition of the existing building.

DMA BUILDING DESIGNS
UNIT 4B, RUDGWICK BRICKWORKS, LYNWICK ST
RUDGWICK, HORSHAM, WEST SUSSEX, RH12 3DH.
TEL No 01403 822220 Mobile 07730 523447
Email - admin@dmabuildingdesigns.co.uk

CLIENT
FRANCESCA PENTICOST

PROJECT
SINGLE STOREY REAR & WRAPPED AROUND SIDE EXTENSION.

REV	DESCRIPTION	DATE
P1	ISSUED FOR PLANNING APPROVAL	13.03.2024

DRAWING
EXISTING FLOOR PLANS & ROOF PLAN
21 CHURCHILL AVE, HORSHAM,
WEST SUSSEX, RH12 2JP

SCALE @ A3	DATE	DRG No	REVISION
1:100	MARCH 2024	DE1230 / 02	P1