GRANT UK

# AERONA 290

## OUR 5TH GENERATION HEAT PUMP

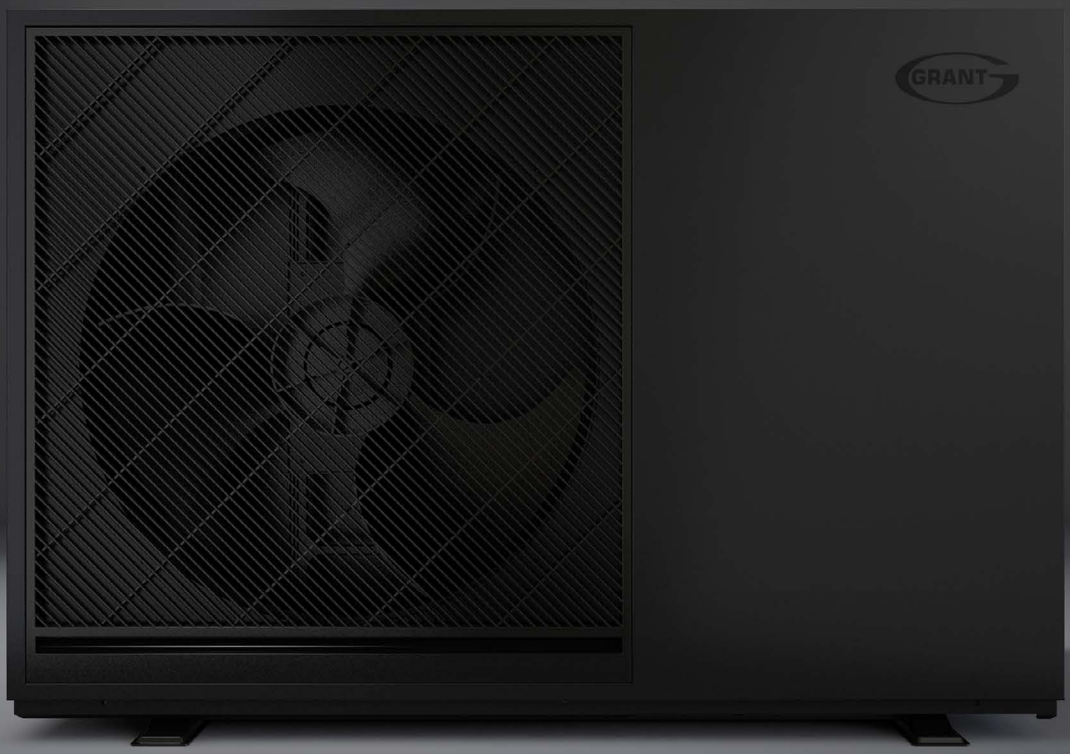


### FOR THE DESIGN

Energy efficient R290 refrigerant

Ultra low noise levels

Modern styling & colourway

### FOR THE PERFORMANCE

Outputs from 4kW – 15.5 kW

Rated at Air -5°C Water 55°C

Remote monitoring & management

### FOR THE PEACE OF MIND

Performs from -25°C to + 35°C

7 year product guarantee*

Design & on-site technical support

## FOR THE NEXT GENERATION

QUIET MARK

A+++

FREE AERONA 290 TRAINING ENQUIRE HERE

GRANTUK.COM

*T&C's Apply

# TECHNICAL DATA

| | | | HPR2904 | HPR29065 | HPR2909 | HPR29012 | HPR290155 |
|---|---|---|---|---|---|---|---|
| VOLTAGE (V) | | | 230 | 230 | 230 | 230 | 230 |
| PHASE | | | 1 | 1 | 1 | 1 | 1 |
| FREQUENCY (Hz) | | | 50 | 50 | 50 | 50 | 50 |
| MAX CURRENT (A) | | | 8.3 | 12.8 | 16.8 | 24.8 | 29.3 |
| HEATING CAPACITY | | A-5W55 (kW) | 4.10 | 6.76 | 9.21 | 12.00 | 15.57 |
| COP | | | 2.48 | 2.27 | 2.31 | 2.22 | 1.9 |
| BS EN 14511 | HEATING CAPACITY | A7W35 (kW) | 4.09 | 7.62 | 9.38 | 12.18 | 16.16 |
| | COP | | 4.99 | 4.95 | 4.93 | 4.81 | 4.72 |
| | HEATING CAPACITY | A7W55 (kW) | 4.36 | 7.23 | 9.30 | 12.21 | 16.33 |
| | COP | | 3.19 | 3.00 | 3.11 | 3.22 | 2.87 |
| ErP RATING (35°C/55°C) HEATING | | | A+++/A++ | A+++/A++ | A+++/A++ | A+++/A++ | A+++/A++ |
| RATED AIR FLOW ($m^3/h$) | | | 2300 | 2650 | 3350 | 4050 | 4050 |
| PRESSURE DROP (MPa) | | | 0.25 | 0.39 | 0.38 | 0.38 | 0.40 |
| REFRIGERANT | | | R290 | R290 | R290 | R290 | R290 |
| GWP | | | 3 | 3 | 3 | 3 | 3 |
| MASS OF R290 REFRIGERANT (kg) | | | 0.61 | 0.83 | 1.00 | 1.20 | 1.65 |
| SOUND POWER LEVEL (dB) (BS EN12102-1) | | | 48 | 52 | 54 | 52 | 53 |
| QUIET MARK | | | YES | YES | YES | YES | YES |
| SOUND PRESSURE LEVEL (Q=2) | | 1m db | 40 | 44 | 46 | 44 | 45 |
| | | 3m db | 31 | 34 | 36 | 34 | 35 |
| WATER CONNECTIONS | | | 1" BSP | 1" BSP | 1" BSP | 1" BSP | 1" BSP |
| WEIGHT (KG) | | EMPTY | 99 | 115 | 131 | 153 | 180 |
| | | FULL | 102 | 117 | 133 | 157 | 184 |
| HEIGHT (mm) | | | 803 | 854 | 854 | 1365 | 1365 |
| WIDTH (mm) | | | 1155 | 1223 | 1223 | 1155 | 1155 |
| DEPTH (mm) | | | 422 | 461 | 461 | 425 | 425 |
| OPERATING AMBIENT TEMPERATURE RANGE SPACE HEATING (°C) | | | -25 to 35 | -25 to 35 | -25 to 35 | -25 to 35 | -25 to 35 |
| OPERATING AMBIENT TEMPERATURE RANGE HOT WATER (°C) | | | -25 to 43 | -25 to 43 | -25 to 43 | -25 to 43 | -25 to 43 |
| OPERATING FLOW TEMPERATURE RANGE SPACE HEATING (°C) | | | 25 to 75 | 25 to 75 | 25 to 75 | 25 to 75 | 25 to 75 |
| OPERATING FLOW TEMPERATURE RANGE HOT WATER (°C) | | | 20 to 70 | 20 to 70 | 20 to 70 | 20 to 70 | 20 to 70 |
| DNO CONNECTION TYPE | | | C & N | C & N | C & N | C & N | C & N |

# DIMENSIONS

4kW

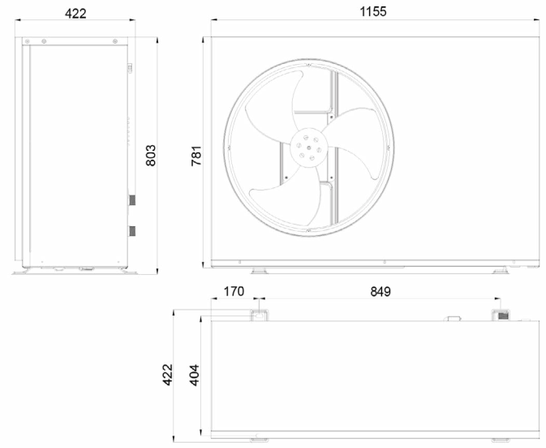


6.5kW & 9kW

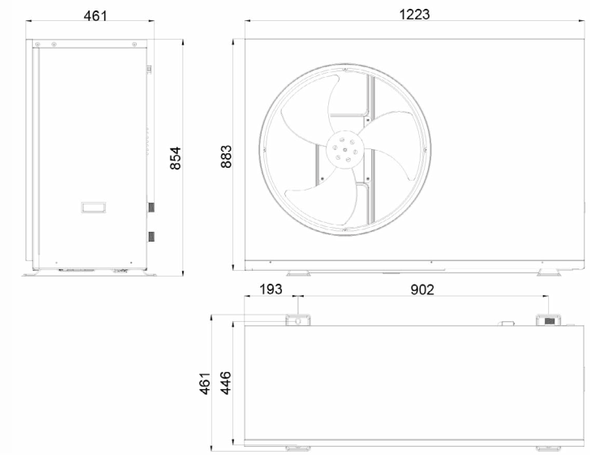


12kW & 15.5kW

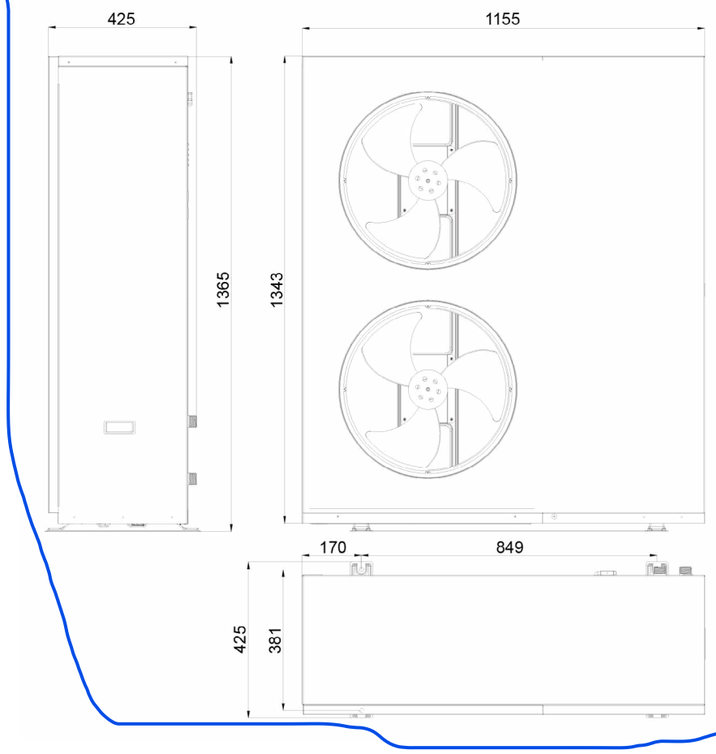






Preview the Aerona 290 here

SCAN & WATCH

GRANT UK

Grant Engineering (UK) Ltd
info@grantuk.com www.grantuk.com

GUKR290DS_REV0924.3