OUTDOOR UNIT		PUZ-WM85VAA(-BS)
HEAT PUMP SPACE HEATER - 55˚C	ErP Rating	A++ (Range A+++ to D)
	η_s	139%
	SCOP (MCS)	3.48
HEAT PUMP SPACE HEATER - 35˚C	ErP Rating	A+++ (Range A+++ to D)
	η_s	193%
	SCOP (MCS)	4.84
HEAT PUMP COMBINATION HEATER - Large Profile*1	ErP Rating	A+ (Range A+ to F)
	η_{wh}	145%
HEATING*2 (A-7/W35)	Capacity (kW)	8.5
	Power Input (kW)	3.27
	COP	2.60
OPERATING AMBIENT TEMPERATURE (°C DB)		-20 ~ +35
SOUND DATA*3	Pressure Level at 1m (dBA)	45
	Power Level (dBA)*4	58
WATER DATA	Pipework Size (mm)	28
	Flow Rate (l/min)	24
	Water Pressure Drop (kPa)	15.0
DIMENSIONS (mm)	Width	1050
	Depth	480
	Height	1020
WEIGHT (kg)		98
ELECTRICAL DATA	Electrical Supply	220-240v, 50Hz
	Phase	Single
	Nominal Running Current [MAX] (A)*5	9.1 [22]
	Fuse Rating - MCB Sizes (A)*6	25
REFRIGERANT CHARGE (kg) / CO_2 EQUIVALENT (t)	R32 (GWP 675)	2.2 / 1.49

NOMINAL HEATING CAPACITY

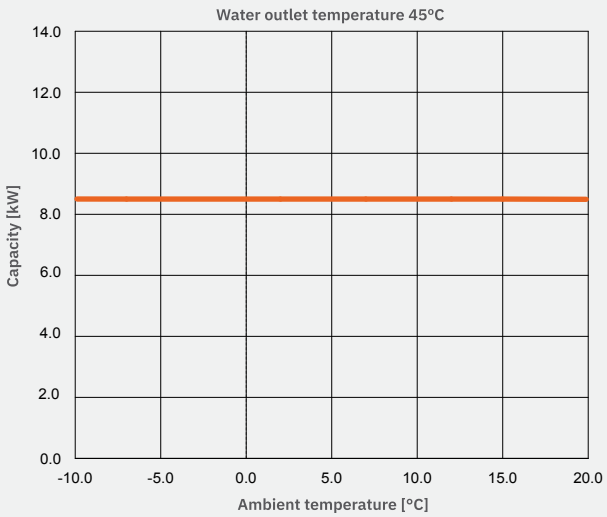

Notes:
*1 Combination with E*PT20X Cylinder
*2 Under normal heating conditions at outdoor temp: -7°CDB / -8°CWB, outlet water temp 35°C, inlet water temp 30°C.
*3 Under normal heating conditions at outdoor temp: 7°CDB / 6°CWB, outlet water temp 55°C, inlet water temp 47°C as tested to BS EN14511.
*4 Sound power level tested to BS EN12102.
*5 Under nominal heating conditions at outdoor temp: 7ºC, outlet water temp: 35ºC.
*6 MCB Sizes BS EN60898-2 & BS EN60947-2.
η_s is the seasonal space heating energy efficiency (SSHEE) η_{wh} is the water heating energy efficiency

PUZ-WM85VAA(-BS) DIMENSIONS

FRONT VIEW

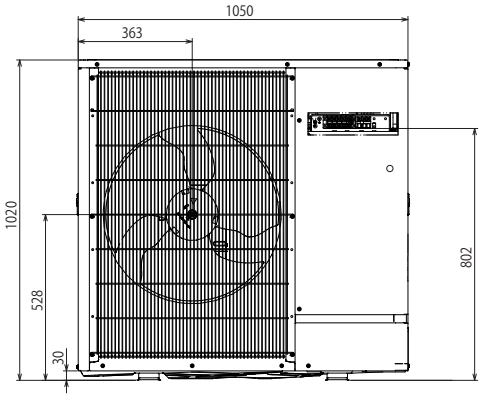

UPPER VIEW

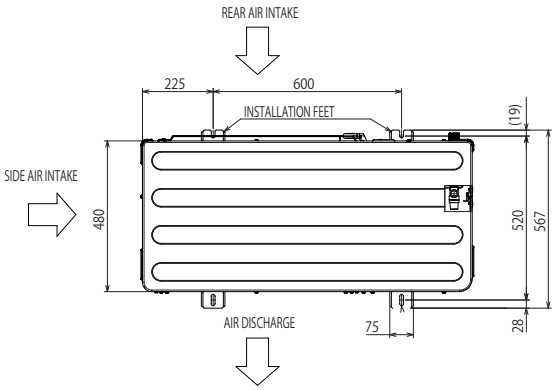

SIDE VIEW

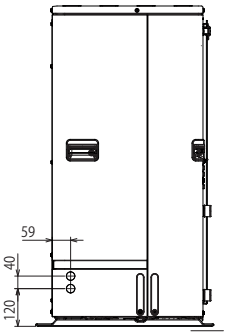

All dimensions (mm)

MITSUBISHI ELECTRIC
Changes for the Better

Telephone: **01707 282880**
email: **heating@meuk.mee.com**
heating.mitsubishielectric.co.uk

@meuk_les
@green_gateway
Mitsubishi Electric Living Environmental Systems UK
Mitsubishi Electric Cooling and Heating UK
mitsubishielectricuk_les
Mitsubishi Electric Living Environmental Systems UK
BLOG thehub.mitsubishielectric.co.uk

UNITED KINGDOM Mitsubishi Electric Europe Living Environment Systems Division, Travellers Lane, Hatfield, Hertfordshire, AL10 8XB, England. Telephone: 01707 282880 Fax: 01707 278881
IRELAND Mitsubishi Electric Europe, Westgate Business Park, Ballymount, Dublin 24, Ireland. Telephone: (01) 419 8800 Fax: (01) 419 8890 International code: (003531)

Country of origin: United Kingdom - Japan - Thailand - Malaysia. ©Mitsubishi Electric Europe 2020. Mitsubishi and Mitsubishi Electric are trademarks of Mitsubishi Electric Europe B.V. The company reserves the right to make any variation in technical specification to the equipment described, or to withdraw or replace products without prior notification or public announcement. Mitsubishi Electric is constantly developing and improving its products. All descriptions, illustrations, drawings and specifications in this publication present only general particulars and shall not form part of any contract. All goods are supplied subject to the Company's General Conditions of Sale, a copy of which is available on request. Third-party product and brand names may be trademarks or registered trademarks of their respective owners.

Note: Refer to 'Installation Manual' and 'Instruction Book' for further 'Technical Information'. The fuse rating is for guidance only and please refer to the relevant databook for detailed specification. It is the responsibility of a qualified electrician/ electrical engineer to select the correct cable size and fuse rating based on current regulation and site specific conditions. Mitsubishi Electric's air conditioning equipment and heat pump systems contain a fluorinated greenhouse gas, R410A (GWP:2088), R32 (GWP:675), R407C (GWP:1774), R134a (GWP:1430), R513A (GWP:631), R454B (GWP:466), R1234ze (GWP:7) or R1234yf (GWP:4). *These GWP values are based on Regulation (EU) No 517/2014 from IPCC 4th edition. In case of Regulation (EU) No.626/2011 from IPCC 3rd edition, these are as follows. R410A (GWP:1975), R32 (GWP:550), R407C (GWP:1650) or R134a (GWP:1300).

Effective as of January 2025

Green Gateway greengateway.mitsubishielectric.co.uk