PROMETHEAN
PLANNING

Brookside Farm
Dagbrook Lane
Henfield
West Sussex
BN5 9SH

Prior Notification for Change of Use of Agricultural Building to residential (Use Class C3) to form 3no dwellinghouses.

WATER NEUTRALITY REPORT and WATER MANAGEMENT PLAN

9th October 2024
(Updated September 2025)

Promethean Planning Ltd, Suite 114, 26 The Hornet, Chichester, West Sussex, PO19 7BB

Location

The site is located to the south of Dagbrook lane in the Parish of Henfield within Horsham District and comprises 2 parcels of land with an existing stable building and agricultural barns.

The Proposal

The proposal is for Prior Notification for Change of Use of Agricultural Building to residential (Use Class C3) to form 3no dwellinghouses which was permitted under application **DC/25/1147.**

Water neutrality

The application site falls within the Sussex North Water Supply Zone, where increased demand for mains-water would exacerbate demand for the continued use/scale of public groundwater abstractions at Hardham Water Works contributing to associated adverse effect upon the integrity of the Arun Valley SAC, SPA and Ramsar sites.

Therefore, based on the evidence it is reasonable to conclude that, without mitigation, the proposal would result in an adverse effect on the integrity of the Arun Valley sites, either alone or in combination with other plans and projects.

The following sets out the water demand from the proposal and how this will be reduced by way of efficient fittings on the development and how this water demand will be met by way of a rainwater harvesting system which would provide for all of the sites water thus removing any potential for impact on the integrity of the Arun Valley SAC, SPA and Ramsar sites.

Baseline Water Consumption and Water reduction measures

The following summarises the flow rates for the fittings in the proposed dwellings.

These have been achieved by the use of efficient fixtures and fittings in order to reduce the water demand.

- WC- 4/2 litre dual flush
- Kitchen sink tap with a flow rate of 6 litre per minute
- Shower with a flow rate of 6 litre per minute
- Bathroom basin taps with a flow rate of 4 litre per minute
- Dishwasher – 0.99 litres per place setting
- Washing machine – 8.5 litres / kg dry load

Using the above figures, the water usage can be calculated using a Part G water calculator as shown in Appendix 1

This demonstrates a water demand of 84.8 litres / person / day which includes an allowance of 5 litres per person per day for external water usage.

Census data has been used to estimate the average number of people in each unit (as per HDC guidance)

This sets out that the following occupancy rates should be used.

One-bedroom dwellings: 1.32 occupants
Two-bedroom dwellings: 1.88 occupants
Three-bedroom dwellings: 2.47 occupants
Four-bedroom dwellings: 2.86 occupants
Five-bedroom dwellings: 3.09 occupants.

Using the Part G water demand figure of 84.8 litres per person per day and a population size of 1.32 foreach unit it is estimated that the total water usage per day per unit is 111.94 litres per day.

Therefore, following the construction of the proposed development there will be an increase in water demand over the 3 units totalling 335.82 litres per day.

Meeting the water demand by way of Rainwater harvesting

Rainwater Harvesting is proposed to be installed to meet 100% of the water demand for both potable and non-potable water.

British Standard 16941-1:2018 (previously BS 8515:2009+A1:2013) provides guidance on rainwater harvesting.

The British Standard gives recommendations on the design, installation, testing and maintenance of rainwater harvesting systems and the methods of calculating the size of rainwater harvesting tanks.

The intermediate approach has been used to calculate the storage capacity.

These re based on an available roof area of 439m2

The calculations for water demand and available yield are shown in Appendix 2

These calculations show the size of the rainwater harvesting system that would be required to meet the water demand for the development for a period of 35 days and 60 days. This would allow for the recognised 35 day drought tolerance capacity but also provides for an extended 60 day tolerance to provide an additional buffer.

The calculations in Appendix 2 conclude that:

- The water demand for the development for each unit and allowing for 35 days of drought tolerance would be 3,922 litres
- The water demand for each unit and allowing for an extended period of 60 days of drought tolerance would be 6,700 litres
- The total available rainwater yield for each unit based on available roof area and allowing for 35 days of drought tolerance would be 6,660 litres (19,982 litres in total for the 3 units)
- The total available rainwater yield for each unit based on available roof area and allowing for an extended period of 60 days of drought tolerance would be 11,378 litres (34,136 litres in total for the 3 units)

It is clear that the available rainwater yield is in excess of the demand and so the development can be entirely supplied by way of rainwater harvesting subject to the quality of the supply being maintained (see below)

Each unit would therefore require a rainwater harvesting tank with a minimum storage capacity of 6,700 litres in order to ensure sufficient capacity to meet the demand of the development.

It is therefore proposed to install a 10,000-litre potable rainwater harvesting tank for each unit. Details of the tank are shown in Appendix 4.

Ensuring certainty of the supply to meet the demand

Based on the above figures it is clear that the rainwater harvesting system will meet the water demand for the site and will meet the required 35 days of storage, which will provide sufficient supply during periods of drought.

Where drought periods extend beyond 35 days, the rainwater harvesting system has been designed to allow for up to 60 days of drought tolerance and so there is no need for an automatic mains backup.

This will ensure that sufficient water is available at all times, even during extended periods of drought.

A meter shall be installed locally on each unit to monitor and record the water usage to ensure the calculated figures are reasonably accurate and to ensure the size of the system remains appropriate.

Filtration Measures proposed to ensure water is potable

The rainwater harvesting supply will undergo a process of filtration to create potable water. The system will incorporate suitable treatment in accordance with drinking water regulations, to ensure that the water quality is suitable for its intended use.

This will be delivered via a free flush Hydroinfinity unit installed in to each unit, full details of which can be found in Appendix 5

The HydroInfinity Rainsafe Residential Series uses H2Ozone patented technology to provide a chemical-free purification solution for all water sources to independently verified drinking water standards.

The units come with a service and maintenance agreement which the applicant will enter in to.

Further details of the unit can be found here HydroInfinity Rainsafe rainwater to drinking water treatment console – Freeflush Water Management Ltd.

The Hydroinfinity unit would be installed by a specialist installer according to manufacturers recommendations. Water usage would be recorded by water meter.

Maintenance and Management Plan

Responsibilities.

The following sets out the long-term management and maintenance of the rainwater harvesting systems at the proposed development.

It is vital that the occupants have a robust inspection and maintenance plan for the lifetime of the development to ensure the quality and yield of the water being supplied ensuring that the proposed development will remain water neutral.

Industry guidance, such as that provided in BS EN 16941-1:2018 and manufacturers guidance has been used to provide the maintenance and management plan.

As the system will be considered as a private water supply it will be governed by the Water Supply (water Quality) Regulations 2016. These are regulated by the local council's Environmental Health Officer or Pollution Control Officer.

The regulations in England and Wales do not require monitoring to be undertaken where the water supply is to a single domestic dwelling unless concerns are raised by the owner or occupier.

The Drinking Water Inspectorate's Private Water Supply regulations sets out that it is the responsibility of the homeowner to ensure that all necessary maintenance activities are carried out in a timely manner.

The occupants of the property should be aware of the system but it is expected that the occupants will enter in to a maintenance agreement with a company that has specialist knowledge of the systems. It is expected that as a minimum, the maintenance work will be carried out by a competent person who must have prior knowledge of the rainwater harvesting systems onsite.

Treatment of water supply.

The system will undergo a number of levels of treatment in order to ensure it complies with the Water Supply (Water Quality) Regulations 2016

Preliminary treatment such as leaf guards on gutters and a water filter will be provided prior to the water reaching the storage tank.

A first flush diverter will be included to divert particles contained in rainwater away from the tank and to a suitable drain. These measures will prevent coarse solids and organic matter from entering the storage tank.

Fine particles will be separated either by sedimentation or flotation to the water surface.

A calmed inlet will be incorporated in the tank to prevent the sediment being disturbed by the inflow of water. Removal of the sediment will be carried out on a 6 monthly basis.

A floating pump will be used to extract the water from the tank, set above the sediment level

The system will then incorporate suitable treatment in accordance with drinking water regulations, to ensure that the water quality is suitable for its intended use.

This will be achieved by the Free Flush Hydroinfinity system which will installed in to each of the units and will provide a chemical-free purification solution for all water sources to independently verified drinking water standards.

Because Ozone Technology is a chemical-free process (no chlorine or fluoride is used), no carcinogenic THMs (Trihalomethanes) are created, guaranteeing a 24/7 365-day sustainable supply of pure, clean, fresh water.

Maintenance of the system, potential contaminants and sampling / testing regime

The units come with a service and maintenance agreement which the applicant will enter in to.

BS EN 16941-1:2018 does not require frequent testing to be undertaken but states that observations for water quality should be made during maintenance visits and testing should be carried out where the system is not operating satisfactorily.

As the water is to be potable however and in order to ensure the water remains safe to drink, samples will be undertaken by a DWI certified sampler on an annual basis as part of the annual maintenance contract and will be tested at a UKAS accredited laboratory.

Annual water samples will be tested for the following in accordance with BS EN 16941-1:2018 :

- pH
- TOC
- Colour
- Turbidity
- Suspended solids
- Conductivity
- Cl, NO3, SO4
- Na, Ca, Mg, Al
- Ni, Cr, Cu, Pb
- Total & Dissolved Fe
- Mn
- Ammonium/Ammonia
- TVC, E.Coli, Coliforms, Pseudomonas aeruginosa, Enterococci, Clostridium perfringens

These samples will be tested to ensure the parameters set out in the Water Supply (Water Quality) Regulations 2016 are met and maintained.

The annual maintenance inspection should include:

- Inspection and cleaning of the tank
- Cleaning of gutters
- Inspection of filters
- Inspection of pumps
- Inspection of overflow areas
- Testing of the water supply

The results of the annual maintenance inspection and all sample testing should be recorded and should be kept with the property for the lifetime of the development.

Filters should be changed on a 3 monthly basis.

The first flush diverter chamber will be cleaned and flushed out regularly as part of the maintenance of the system to avoid it contaminating the system.

Contingency measures for system issues.

If a water sample failed, the point of use would be investigated by a British Water certified engineer and would be reported to the supplier of the free flush Hydroinfinity unit so the issue could be resolved. This would be reported to the LPA.

Drain down points for each water pipeline will be installed for ease of cleaning and sterilization.

The Service contract will allow for attendance to address re-activation of the system after it has been out of use due to lack of rainfall/use.

Should the system fail, it would be investigated and repaired by a British Water certified engineer. This would likely mean that the system could be out of action for 7-10 days.

In these circumstances the occupants would seek a supply of bottled water or other supply of water sourced from outside the Arun Valley sites' catchment area.

This approach was accepted by the inspector in a recent appeal decision at Pear Tree Farm, Henfield (reference APP/Z3825/C/23/3318225) where the inspector concluded that:

> *Concerns that the development could be connected to the mains water supply in the future could also be addressed by a suitably worded condition. This would need to include provision of a contingency for an emergency situation should the spring supply ever fail. In the unlikely event that there is a disruption to the spring supply, I am unconvinced that connecting to the mains supply would be an effective solution, given how long it would take for such a supply to be installed and connected. A more likely scenario would be that the occupiers of the pitches would seek a supply of bottled water or water sourced from outside the Arun Valley sites' catchment area. This approach would not be dissimilar to that taken by Gypsies on a day-to-day basis when they are travelling.*

It is not unreasonable to assume that occupants could seek a supply of bottled water for the short period if the system were to fail and whilst it is repaired and as concluded by the inspector this could be secured by a suitably worded condition.

The British Water certified engineer will undertake the completion of a Regulation 6 risk assessment by a suitably competent person (as required by the Private Water Supply (England) Regulations 2016) prior to the water supply being put into use and this will be provided to the Environmental Health Officer at the LPA prior to occupation of the unit.

The above is considered to be a detailed plan which provides sufficient information to ensure the supply is safely maintained and that the development remains water neutral.

Use of Planning Conditions

This report has demonstrated with certainty that the development will be water neutral and that the rainwater harvesting system will provide a suitable potable water supply.

A report with identical detail of this report was considered sufficient in the assessment of DC/23/1460 at Meadowhurst, Slinfold.

The detail of this report has in fact been extended further to include further details on the maintenance of the system and the likely contaminants that the system will treat.

DC/23/1460 accepted that the use of the water will not be relevant until occupation of the development and that it is vital that the quality of the water is assured prior to the development being occupied.

As such it was accepted that preoccupation, post occupation and regulatory conditions could be used to provide the certainty required.

The following conditions taken direct from DC/23/1460 can be used and the applicant is willing to accept the use of such conditions.

> ***Pre-Occupation Condition:*** *The development hereby permitted shall be undertaken in full accordance with the water neutrality strategy (Water Neutrality Statement prepared by Phil Rowe received on 27.07.2023). The dwelling hereby permitted shall not be first occupied until evidence has been submitted to and been approved in writing by the Local Planning Authority that the approved water neutrality strategy has been implemented in full. The evidence shall include the specification of fittings and appliances used, evidence of their installation, evidence they meet the required water consumption flow rates, and evidence of the installation and connection of the rainwater harvesting system and appropriate storage tanks to provide a minimum 35 days storage capacity. The installed measures shall be retained and operated as such at all times thereafter.*
>
> ***Post-Occupation Condition****: Within 3 months of the occupation of the dwelling, evidence of the water consumption of the occupants shall be submitted to, and have been approved in writing by, the Local Planning Authority. The evidence shall demonstrate that there is sufficient water supply from the rainwater harvesting system to cater for the demand of the dwelling with a minimum of 35 days drought storage capacity. In the event the existing rainwater harvesting system fails to cater for the water consumption of the dwelling, details of how suitable rainwater supply and storage will be provided shall be submitted to and be approved in writing by the Local Planning Authority alongside the above evidence and shall be installed within 1 month of the date of its approval. Ongoing written evidence shall be made available to council officers upon their reasonable request.*
>
> ***Regulatory Condition:*** *No unit hereby permitted shall be connected to or draw supply from the mains water supply except for emergency purposes in the event of a temporary failure of the rainwater harvesting system. Where a temporary failure has occurred, the occupiers shall immediately undertake the contingency measures set out in the management and maintenance plan agreed under condition 6 until such time as the system is fully operational. The occupiers of each unit shall keep an ongoing record of all water taken from the mains supply and hold written evidence to explain why it was necessary as an exceptional measure to take water from the mains supply.*

Conclusion

This report confirms that the rainwater harvesting system proposed to be installed on the site would provide a certain sufficient yield to meet the water demands of the site.

The filtration system provides guaranteed water quality and there would be robust management and maintenance contracts in place to ensure this remains the case for the lifetime of the development.

Robust reporting by suitably qualified engineers and testing at recognised laboratories would provide certainty as to the quality of the water.

The use of preoccupation, post occupation and regulatory conditions, as used in DC/23/1460 could be used to provide the certainty required.

This strategy will minimise the impact of the new development on the Sussex North Water Supply Zone. The Water Usage Strategy confirms the proposal will be water neutral once complete and therefore satisfies Natural England's requirements.

As such, there is no reasonable scientific doubt that the proposed development would be water neutral. The proposal would not result in an increase in water abstraction in the River Arun and Western Streams catchment of the Sussex North WRZ.

Therefore, it would not adversely affect the integrity of the Arun Valley SAC, SPA and Ramsar sites. Consequently, it would be consistent with Policy 31 of the HDPF which seek to protect the hierarchy of designated sites and habitats.

APPENDIX 1
Part G Water calculations

Water Calculator | WC | Taps (Other) | Taps (Kitchen/Utility) | Baths | Dishwashers | Washing Machines | Showers | H2O softeners | Greywater | Rainwater

Installation Type	Unit of Measure	Capacity/Flow rate (1)	Use Factor (2)	Fixed use (litres/person/day) (3)	Litres/person/day = [(1)x(2)] + (3) (4)
WC (single flush)	Flush Volume (litres)		4.42	0.00	0
WC (dual flush)	Full flush Volume (litres)	4	1.46	0.00	5.84
	Part flush Volume (litres)	2	2.96	0.00	5.92
WC (multiple fittings)	Average effective flushing Volume (litres)		4.42	0.00	0
Taps (excluding kitchen/utility room taps)	Flow rate (litres/min)	4.00	1.58	1.58	7.90
Bath (where shower also present)	Capacity to overflow(litres)		0.11	0.00	0
Shower (where bath also present)	Flow Rate(litres / minute)		4.37	0.00	0
Bath Only	Capacity to overflow(litres)		0.50	0.00	0
Shower Only	Flow Rate (litres/minute)	6.00	5.60	0.00	33.60
Kitchen/Utility room sink taps	Flow rate (litres/minute)	6.00	0.44	10.36	13.00
Washing Machine	(Litres/kg dry load)	8.50	2.1	0.00	17.85
Dishwasher	(Litres/place setting)	0.99	3.6	0.00	3.56
Waste disposal unit	(Litres/use)	☐ Present	3.08	0.00	0
Water Softener	(Litres/person/day)		1.00	0.00	0
	(5)	**Total Calculated use (litres/person/day) =SUM(column 4)**			87.67
	(6)	Contribution from greywater (litres/person/day)			0
	(7)	Contribution from rainwater (litres/person/day)			0
	(8)	Normalisation factor			0.91
	(9)	Total internal water consumption = [(5)-(6)-(7)]x(8) (litres/person/day)			79.78
	(10)	External water use			5.0
	(11)	**Total water consumption (Building Regulation 17.K) =(9)+(10)(litres/person/day)**			84.8

Click here to fill in details before printing:

Appendix 2

Water demand per unit and total available yield for rainwater harvesting calculations.

Water Demand per unit	1 bed
Dn = Pd x n x 365 x (365/number of days of drought storage required)	
Dn is the water demand	
Pd is the daily water requirement per person (litres)	
n is the number of persons	
35 Day water demand calculations calculated at 9.6% (35/365) of the Annual water demand (litres) to account for 35 days of storage for periods of drought	
Pd (daily water requirement per person (litres))	84.8
n (number of persons)	1.32
Dn (water demand) in litres	3922
60 Day water demand calculations calculated at 16.4% (60/365) of the Annual water demand (litres) to account for 60 days of storage for periods of drought and provide an increased buffer	
Pd (daily water requirement per person (litres))	84.8
n (number of persons)	1.32
Dn (water demand) in litres	6700

Available Yield (TOTAL)	1 bed
Yr = A x e x AAR x h x (365/number of days of drought storage required)	
Yr is the rainwater yield	
A is the collection area (m2)	
e is the yield coefficient	
AAR is the site specific annual average rainfall	
h is the hydraulic filter efficiency	
35 Day rainwater storage calculations calculated at 9.6% (35/365) of the Annual rainwater yield (litres) to account for 35 days of storage for periods of drought	
A (collection area (m2))	439
e (yield coefficient)	0.7
AAR (site specific annual average rainfall)	752.61
h (hydraulic filter efficiency)	0.9
Yr (rainwater yield) in litres	19982
60 Day rainwater storage calculations calculated at 16.4% (60/365) of the Annual rainwater yield (litres) to account for 60 days of storage for periods of drought and provide an increased buffer	
A (collection area (m2))	439
e (yield coefficient)	0.7
AAR (site specific annual average rainfall)	752.61
h (hydraulic filter efficiency)	0.9
Yr (rainwater yield) in litres	34136

Appendix 3

Average rainfall (mm) from nearest weather station

Average tables | Average graphs | Location comparison | Average maps

Climate period: 1991-2020

Station: Shoreham Airport

Month	Maximum temperature (°C)	Minimum temperature (°C)	Days of air frost (days)	Sunshine (hours)	Rainfall (mm)	Days of rainfall ≥1 mm (days)	Monthly mean wind speed at 10 m (knots)
January	8.19	2.37	8.03	–	80.45	12.71	10.06
February	8.37	2.25	7.88	–	56.70	10.27	9.70
March	10.48	3.56	3.90	–	45.66	9.04	9.27
April	13.12	5.15	1.77	–	45.13	9.11	8.64
May	16.31	8.11	0.00	–	45.93	8.33	8.86
June	19.08	10.95	0.00	–	46.68	7.74	8.46
July	20.94	13.02	0.00	–	54.18	7.63	8.57
August	21.03	13.06	0.00	–	58.73	8.46	8.36
September	18.92	10.92	0.00	–	59.13	8.23	8.52
October	15.49	8.38	0.40	–	82.20	11.57	9.13
November	11.61	5.21	2.97	–	90.37	13.12	9.55
December	8.87	2.81	8.15	–	87.45	12.62	9.86
Annual	14.40	7.18	33.10	–	752.61	118.83	9.08

Appendix 4

Details of rainwater harvesting tank



10,000 LITRE UNDERGROUND POTABLE WATER TANK

Product Ref: **ECO10000UNDPOT**

CUSTOMER OFFLOADING | HDPE | POTABLE | CYLINDRICAL | BELOW GROUND

Volume: **10000ltr**

Weight: **280.000kg**

Dimensions: **W:2700mm H:2415mm**

Lid Size: **600**

Diameter: **2700mm**

Home Delivery

UK mainland delivery from **FREE** ex VAT

CHECK DELIVERY COST

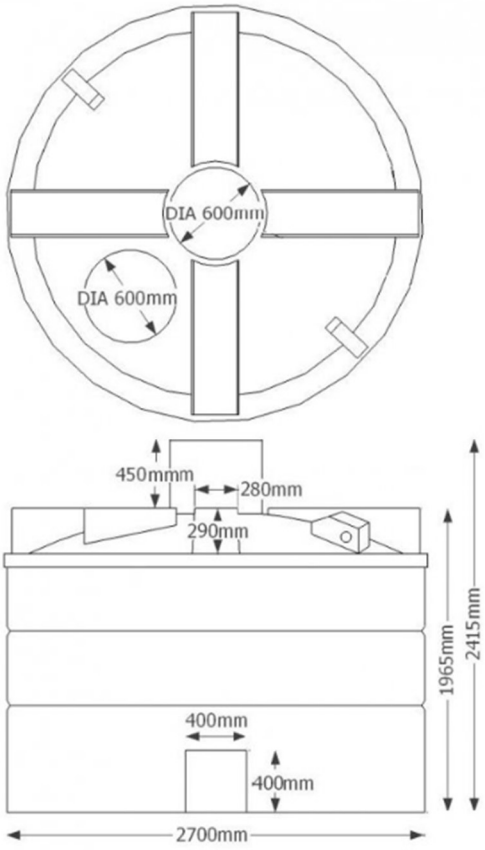

Appendix 5

Details of filtration system

RainSafe™

Using H_2Ozone Technology



A totally integrated solution for Home, Business, Hospitality, Care and Industry.

RainSafe™ uses **patented H_2Ozone Technology** to provide a **chemical-free** purification solution for harvested rainwater[1] to independently verified drinking water standards.

RainSafe™ offers 24/7 365-day guaranteed pure drinking water solutions for:

- **Residential Premises**
- **Commercial and Office Premises**
- **Hotels, Restaurants and Pubs**
- **Schools, Colleges and Sports Halls**

... Anywhere that requires 24/7 365-day guaranteed pure drinking water.

The unique benefits of RainSafe™

- **Proven, advanced patented technology**
- Water is sourced from your own rain-harvesting system, wells, boreholes or municipally supplied water.
- **RainSafe™** is the only **chemical-free** water purification system available which inactivates all pathogenic organisms from your water supply, including ***E.coli, Salmonella, Legionella*** bacteria and the ***Cryptosporidium oocyst***.





