KEMPOWER

Technical Datasheet

Kempower Satellite

Version 2



The Kempower Satellite DC charging system is the optimal solution for public charging and other sites that need multiple fast charging outputs.

Satellites are connected to Power Unit or Station Charger. One Power Unit can simultaneously provide energy for up to 8 DC charging outputs with 800 VDC systems and up to 6 outputs with Adaptive Voltage systems covering both 400 and 800 VDC charging.

The maximum available charging power of the system is 600 kW, depending on the Power Unit version. Each output can deliver up to 400 kW to the charging Satellite.

Satellite is available with an integrated energy meter, showing the amount of energy the charger has provided after the start of the charging session.

Maximum charging power

Up to 400 kW

Number of Satellites in the system

1–8

KEMPOWER SATELLITE VERSION 2 EN REV 3.80 04-2026 PUBLIC
SUBJECT TO CHANGE WITHOUT NOTICE © KEMPOWER 2026

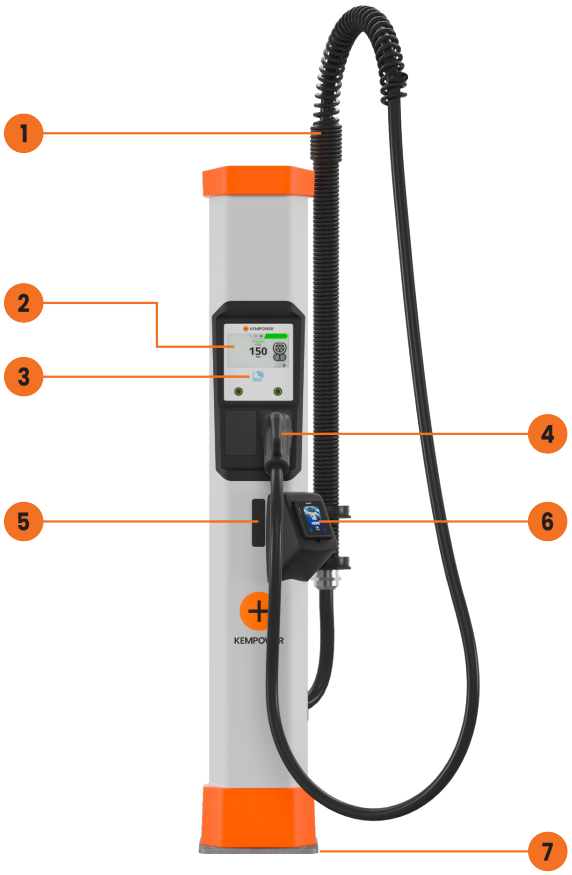

1. Charging cable support system
2. 7” touch screen display
3. RFID reader
4. Vehicle connector
5. Energy meter window
6. Payment terminal (option)
7. Mounting flange

Advanced cable support system for premium user experience

Easy-to-use, intuitive user menu on a 7” touch screen display

On-screen QR code for following the charging status on your mobile phone

Kempower advanced charging Satellite system with up to 8 simultaneous charging outputs

Cabling distance between Power Unit and Satellites up to 80 meters

Advanced charging control and customization with Kempower ChargEye

KEMPOWER SATELLITE VERSION 2 EN REV 3.80 04-2026 PUBLIC
SUBJECT TO CHANGE WITHOUT NOTICE © KEMPOWER 2026

Product code interpretation

ST•C•5•C•S•M•C0

Kempower Satellite Version 2 • 1 x CCS2 connector • 5 m charging cable • 200 A cable current • standard user interface • PTB-certified DC energy meter • unbranded

Item	Code	Description
Product type	ST	Kempower Satellite Version 2
Vehicle connector type	C	CCS2
	CC	2 x CCS2
	CD	CCS2 & CHAdeMO
	X	CCS2/CHAdeMO[A]
Charging cable length	5	5 m
	7	7 m
Nominal charging cable current	B	125 A (CHAdeMO)
	C	200 A (CCS2)
	D	250 A (CCS2)
	E	300 A/500 A[B] (CCS2)
	G	375 A/500 A[C] (CCS2)
User interface and payment	S	Standard user interface
	C	Ready for Castles S1U2[D]
	L	Worldline Castles S1U2: Contactless payment with online PIN entry and verification, chip and magnetic stripe reader
	O	Payter Apollo: Contactless payment with online PIN entry and verification
	P	Payter P66: Only contactless payments, no strong customer authentication (SCA) possibility
	Q	Ready for PAX IM30 V2[D]
Meter	M	PTB-certified DC energy meter
	F	MID/LNE-certified DC energy meter
Equipment stop	E	Equipment stop button
Branding	C0	Unbranded: roof and base in black color, no stickers
	Cn	Branded: number (n) indicates branding, e.g. C8

[A] *Allows up to 16 outputs per Power Unit, max. 8 outputs charging simultaneously.*

[B] *500 A (max. 15 min) in +25 °C. Requires at least 3 output terminals connected together at Power Cabinet, and a specific hardware configuration. 300 A (continuous) in +25 °C. Requires at least 2 output terminals connected together at Power Cabinet, and a specific hardware configuration.*

[C] *500 A (max. 50 min) in +25 °C. Requires at least 3 output terminals connected together at Power Cabinet, and a specific hardware configuration. 375 A (continuous) in +25 °C. Requires at least 2 output terminals connected together at Power Cabinet, and a specific hardware configuration.*

[D] *For details, see Options.*

SUBJECT TO CHANGE WITHOUT NOTICE © KEMPOWER 2026

Product codes

Product code	Charging outputs	Vehicle connector	Simul. charging with 2 outputs	Max. charging current	Charging power at 400 VDC	Charging power at 800 VDC
Product codes with 5 m charging cables						
ST•C•5•C•S•	1	CCS2	N/A	200 A	80 kW	160 kW
ST•C•5•D•S•	1	CCS2	N/A	250 A	100 kW	200 kW
ST•C•5•E•S•	1	CCS2	N/A	300 A/500 A[A]	120 kW/200 kW	240 kW/400 kW
ST•C•5•G•S•	1	CCS2	N/A	375 A/500 A[B]	150 kW/200 kW	300 kW/400 kW
ST•CC•5•C•S•	2	2 x CCS2	Yes	2 x 200 A	2 x 80 kW	2 x 160 kW
ST•CC•5•D•S•	2	2 x CCS2	Yes	2 x 250 A	2 x 100 kW	2 x 200 kW
ST•CC•5•E•S•	2	2 x CCS2	Yes	2 x 300 A/ 500 A[A]	2 x 120 kW/ 200 kW	2 x 240 kW/ 400 kW
ST•CC•5•G•S•	2	2 x CCS2	Yes	2 x 375 A/ 500 A[B]	2 x 150 kW/ 200 kW	2 x 300 kW/ 400 kW
ST•CD•5•CB•S•	2	CCS2 & CHAdeMO	Yes	200 A & 125 A	80 kW & 50 kW	160 kW & 100 kW
ST•CD•5•DB•S•	2	CCS2 & CHAdeMO	Yes	250 A & 125 A	100 kW & 50 kW	200 kW & 100 kW
ST•CD•5•EB•S•	2	CCS2 & CHAdeMO	Yes	300 A/375 A[C] & 125 A	120 kW/150 kW & 50 kW	240 kW/300 kW
ST•X•5•EB•S•	2	CCS2 & CHAdeMO	No	300 A/375 A[C] & 125 A	120 kW/150 kW & 50 kW	240 kW/300 kW

[A]*500 A (max. 15 min) in +25 °C. Requires at least 3 output terminals connected together at Power Cabinet, and a specific hardware configuration. 300 A (continuous) in +25 °C. Requires at least 2 output terminals connected together at Power Cabinet, and a specific hardware configuration.*

[B]*500 A (max. 50 min) in +25 °C. Requires at least 3 output terminals connected together at Power Cabinet, and a specific hardware configuration. 375 A (continuous) in +25 °C. Requires at least 2 output terminals connected together at Power Cabinet, and a specific hardware configuration.*

[C]*375 A (max. 60 min) in +25 °C. Requires at least 2 output terminals connected together at Power Cabinet, and a specific hardware configuration. 300 A (continuous) in +25 °C. Requires at least 2 output terminals connected together at Power Cabinet, and a specific hardware configuration.*

***Note:** Versions with 7 m charging cables: Change **5** to **7** in the product code, e.g. from STC**5**CS to STC**7**CS.*

***Note:** Versions with a payment terminal: Change **S** to **C** or **L** or **O** or **P** or **Q** in the product code, e.g. from STC5C**S** to STC5C**C** or STC5C**L** or STC5C**O** or STC5C**P** or STC5C**Q**.*

***Note:** Versions with a DC energy meter: Add **M** or **F** in the product code, e.g. STC5CS**M**.*

General electrical specifications

DC charging connector options	CCS2 IEC 62196-3, CHAdeMO
Voltage	Max. 1000 VDC
Standby power	25 W

SUBJECT TO CHANGE WITHOUT NOTICE © KEMPOWER 2026

Environmental specifications

Operating temperature	-30…+55 °C (derating above +40 °C)
Derating	Charging cable pin temperature limits charging current. For other limiting variables, see the applicable Power Unit datasheet.
Storage temperature	-40…+60 °C
Ambient air humidity	< 95% relative humidity
Enclosure rating	IP54, IK10 (IK09 for the payment terminal)

Connections and protocols

Ethernet	RJ45, IEEE 802.3/802.3u
OCPP	1.6j/2.0.1
Connectivity	Kempower ChargEye solution
CCS2	DIN 70121:2012, ISO 15118-1:2013
CHAdeMO	0.9/1.0
Authentication methods	RFID: ISO 14443A, ISO 15693, ISO 14443B (STM SRI512) Customer backend via OCPP Payment terminal AutoCharge ISO 15118-2 Plug & Charge

Electrical connections (between Satellite and Power Unit)

DC power cable per vehicle connector (terminals 2 x 150 mm² per pole, for 2 x 300 A and 2 x 375 A Satellite versions busbar with 1 x M10 lug nut connection point per pole)[A]
Control power cable (24 VDC)
Communications cable (RJ45)

[A]*Make sure that the overall diameter of the DC supply cables fits through the mounting flange (see Mechanical dimensions). For more information, see the User manual.*

Electrical protections

Vehicle connector pin temperature monitoring

Compliance to standards

IEC 61851-1 IEC 61851-21-2 IEC 61851-23

SUBJECT TO CHANGE WITHOUT NOTICE © KEMPOWER 2026

Options

Payment terminal	Ready for Castles S1U2 Ready for PAX IM30 V2	Contactless payment with online PIN entry and verification, chip and magnetic stripe reader. Option does not include the payment terminal hardware. Kempower provides only necessary parts for installing the payment terminal with pre-drilled installation holes on the Satellite frame. Kempower warranty does not cover the payment terminal. Customer is responsible for acquiring the payment terminal hardware, and installing and commissioning it according to Kempower and payment terminal supplier instructions.
	Payter Apollo	Contactless payment with online PIN entry and verification
	Payter P66	Only contactless payments, no strong customer authentication (SCA) possibility
	Worldline Castles S1U2	Contactless payment with online PIN entry and verification, chip and magnetic stripe reader
Equipment stop button		
Customized branding	Branding options, such as custom colors and stickers Contact Kempower for availability, pricing, and minimum order quantity	

Mechanical dimensions

Size (W x H x D)
300 x 1738 x 300 mm

Product code	Weight
ST•C•5•C•S•	76 kg
ST•C•5•D•S•	104 kg
ST•C•5•E•S•	109 kg
ST•C•5•G•S•	110 kg
ST•CC•5•C•S•	109 kg
ST•CC•5•D•S•	164 kg
ST•CC•5•E•S•	174 kg
ST•CC•5•G•S•	176 kg
ST•CD•5•CB•S•	106 kg
ST•CD•5•DB•S•	134 kg
ST•CD•5•EB•S•	139 kg
ST•X•5•EB•S•	139 kg

Note: *Versions with 7 m charging cables: Add 2 kg to the weight.*

SUBJECT TO CHANGE WITHOUT NOTICE © KEMPOWER 2026

Satellite with two DC charging outputs, front and side view

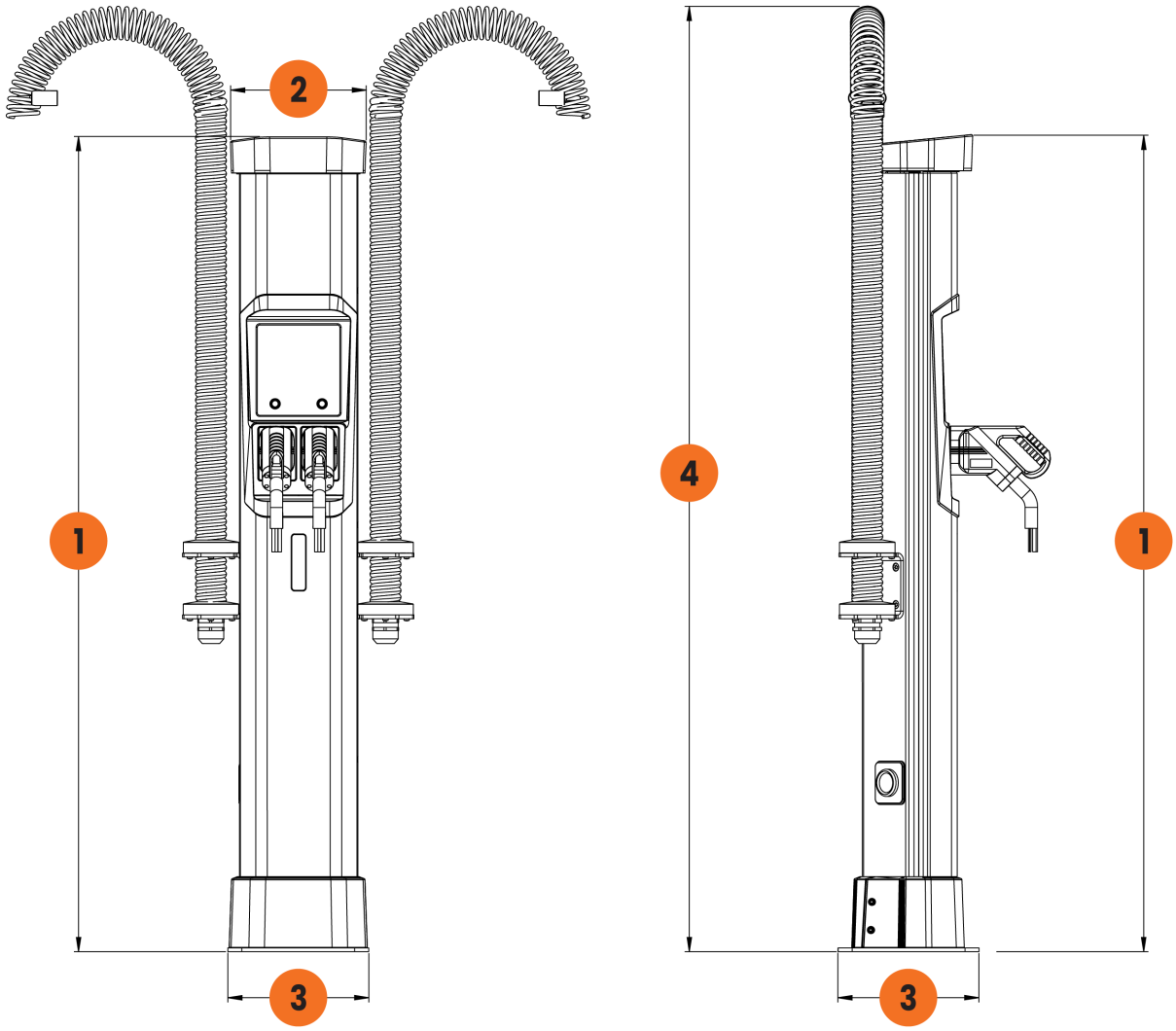

Satellite with two DC charging outputs, top view

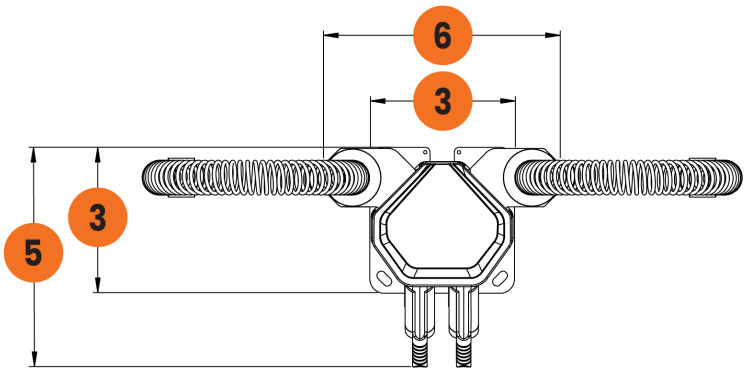

KEMPOWER SATELLITE VERSION 2 EN REV 3.80 04-2026 PUBLIC
SUBJECT TO CHANGE WITHOUT NOTICE © KEMPOWER 2026

Satellite with two DC charging outputs and payment terminal, front and side view

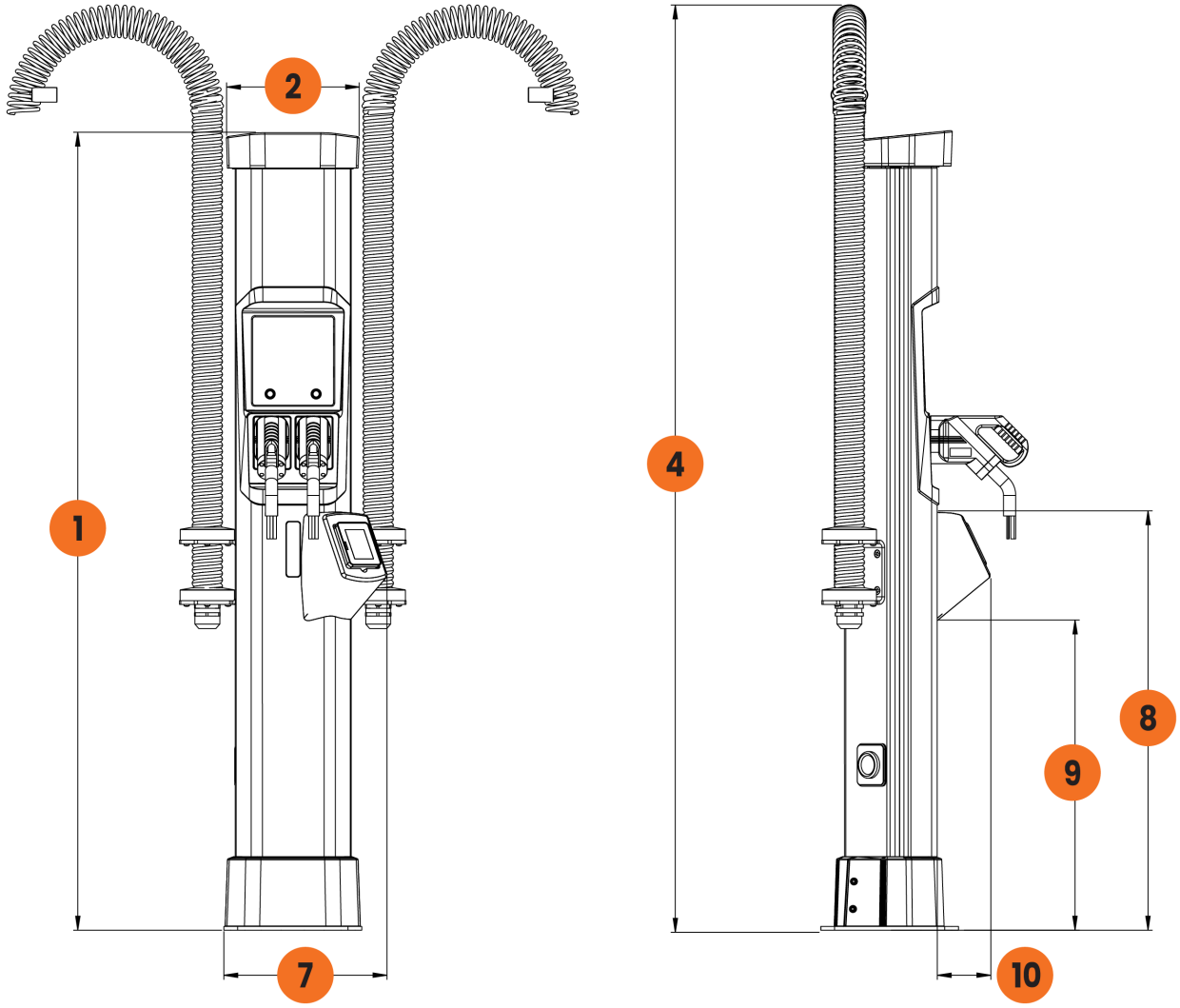

Satellite with two DC charging outputs and payment terminal, top view

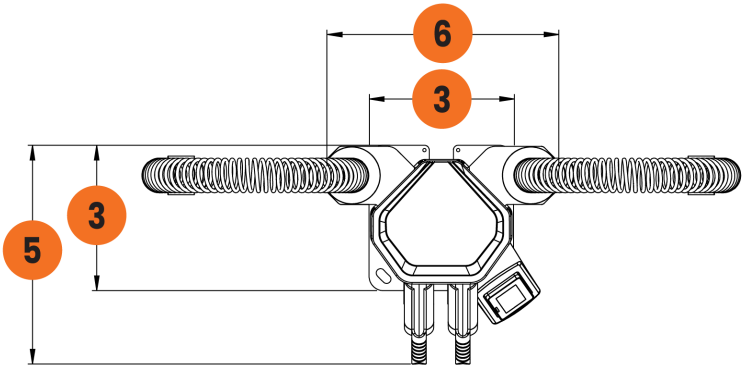

SUBJECT TO CHANGE WITHOUT NOTICE © KEMPOWER 2026

Footprint of standard installation flange

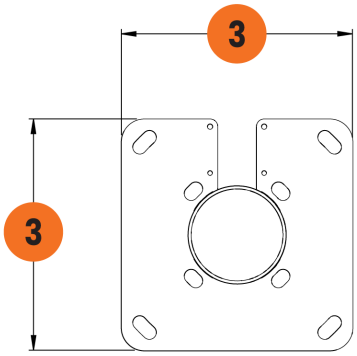

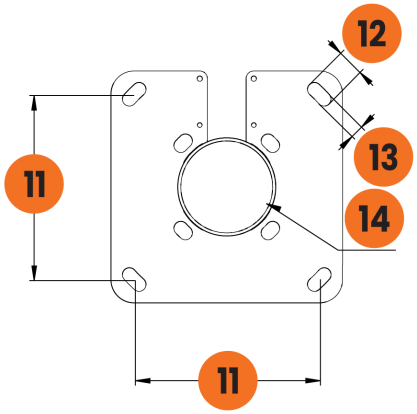

Footprint with mounting tube

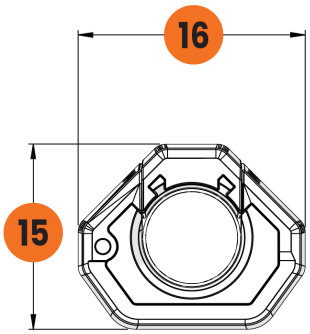

Measurements

1.	1738 mm	6.	493 mm	11.	240 mm	16.	294 mm
2.	289 mm	7.	354 mm	12.	36 mm		
3.	300 mm	8.	911 mm	13.	18 mm		
4.	2100…2400 mm	9.	675 mm	14.	Ø 120 mm		
5.	450 mm	10.	115 mm	15.	239 mm		

SUBJECT TO CHANGE WITHOUT NOTICE © KEMPOWER 2026

KEMPOWER

kempower.com

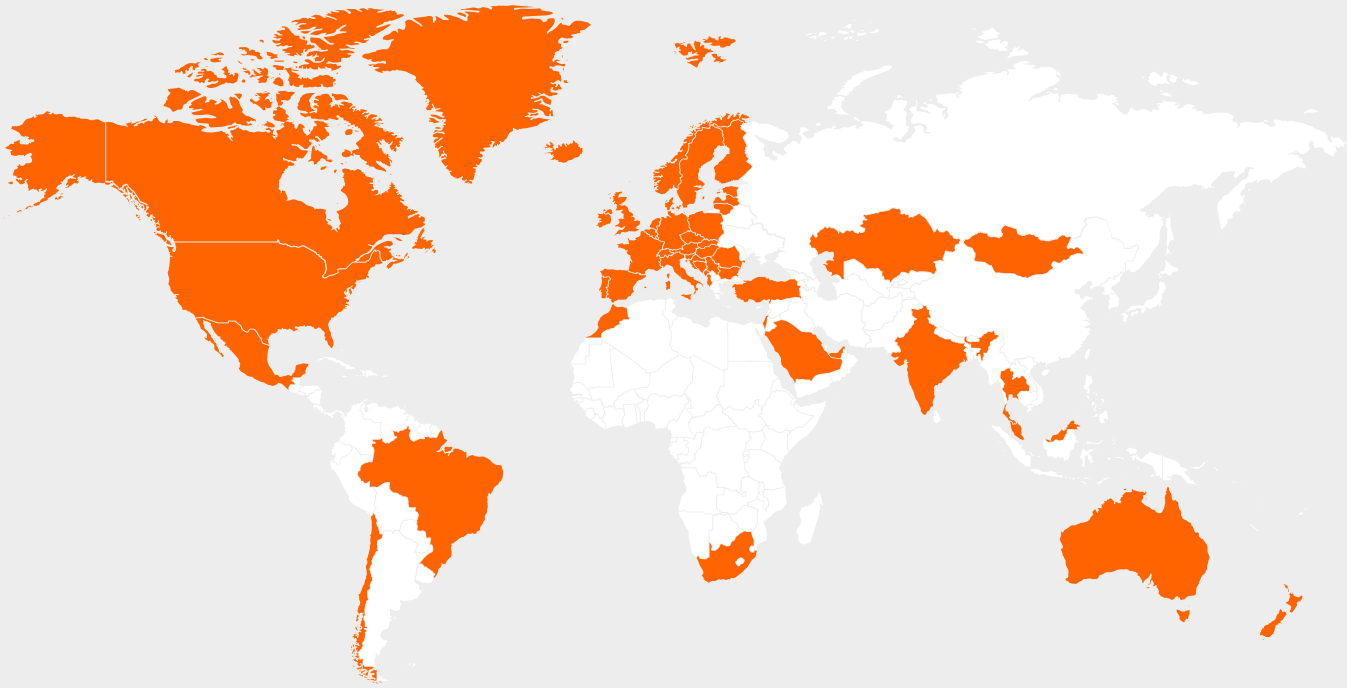

Kempower Oyj

Ala-Okeroistentie 29, 15700 Lahti, Finland

KEMPOWER AND CHARGEYE ARE TRADEMARKS OF KEMPOWER OYJ, REGISTERED IN THE U.S. AND OTHER COUNTRIES AND REGIONS