Specifications

- U Value: Double Glazed 1.6 W/m2K, Triple Glazed 1.4 W/m2K
- Part L: Yes

Profiles

Heritage sheerline profile details	Stepped profiles Cross-section
- - - - **FRAME DETAILS**	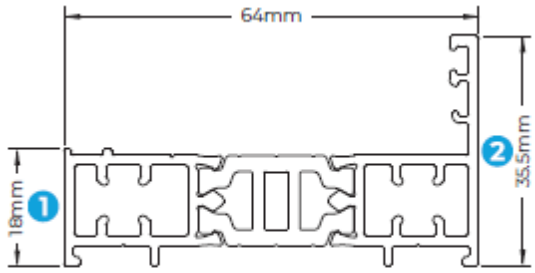 **SC100** SMALL OUTER FRAME
- - - - - **SASH DETAILS** -	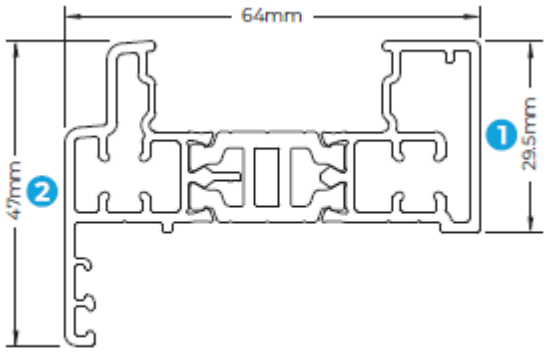 **SC300** STEPPED SASH
- - - - - - - **TRANSOM DETAILS**	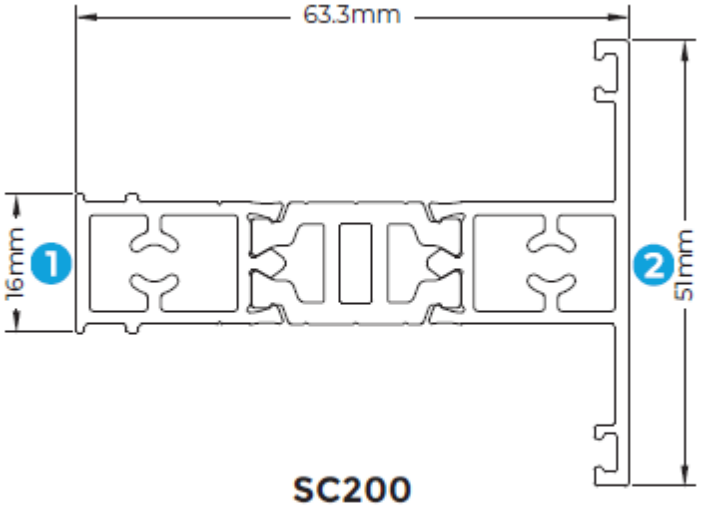 **SC200** TRANSOM/MULLION