18 February 2025

Planning Services,
Horsham District Council,
Parkside,
Chart Way,
Horsham,
West Sussex,
RH12 1RL

Hannah Keyte
[redacted]

Runway East – York and Elder
50 New England Street
Brighton
BN1 4AW
www.savills.com

Dear Sir/Madam,

**ERECTION OF TEMPORARY AGRICULTURAL WORKERS DWELLING– APPLICATION REF: DC/23/0306**
**Sluetts Farm, Two Mile Ash Road, Horsham, RH13 0LA**

## Introduction

This Supporting Letter has been prepared to accompany an application for approval of details reserved by condition following approval of application ref: DC/23/0306. The application is submitted to Horsham District Council (HDC) on behalf of Mr. David Exwood, who is a farm tenant of the Christ's Hospital Foundation (CHF). This application seeks to discharge Condition 7.

## Condition 7 (Water Neutrality Strategy Evidence)

The condition reads as follows:

*"7 **Pre-Occupation Condition**: No dwelling hereby permitted shall be first occupied until evidence has been submitted to and been approved in writing by the Local Planning Authority that the approved water neutrality strategy for that dwelling has been implemented in full. The evidence shall include the specification of fittings and appliances used, evidence of their installation, details of the rainwater harvesting system installed including a minimum 35 days storage capacity, and completion of the as built Part G water calculator or equivalent. The installed measures shall be retained as such thereafter.*

*Reason: To ensure the development is water neutral to avoid an adverse impact on the Arun Valley SACSPA and Ramsar sites in accordance with Policy 31 of the Horsham District Planning Framework (2015), Paragraphs 179 and 180 of the National Planning Policy Framework (2021), and to enable the Local Planning Authority to discharge its duties under the Conservation of Habitats and Species Regulations 2017 (as amended), and s40 of the NERC Act 2006 (Priority habitats & species).*

## Water Neutrality Evidence

The specification for the fittings and appliances to be used on site for the temporary workers dwelling are enclosed to this letter.

In terms of the bespoke rainwater harvesting system (RHS), this has been attached to an existing barn at Sluetts Farm, as shown in Figure 1 below. During a 35 day drought, additional water demand across the site due to the proposed development would equate to 7,098.35 l (35 x 202.81 l/d). The total capacity of the system at any given time is 88,000 l (4 x 22,000 l tanks), meaning that there is capacity to offset the additional demand

Offices and associates throughout the Americas, Europe, Asia Pacific, Africa and the Middle East.

Savills (UK) Limited. Chartered Surveyors. Regulated by RICS.
A subsidiary of Savills plc. Registered in England No. 2605138. Registered office: 33 Margaret Street, London, W1G 0JD

caused by the proposed development during a period of drought. Photographic evidence of the installation of the RHS has been enclosed to this letter in order to discharge condition 7.

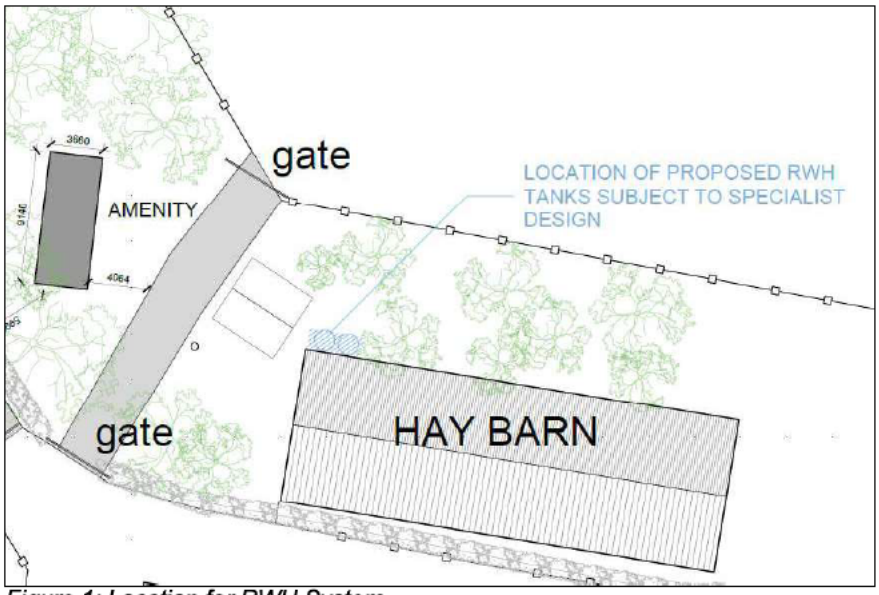

*Figure 1: Location for RWH System*

The Part G water calculator was completed as part of the Water Neutrality Statement that accompanied the full planning application (DC/23/0306), please refer to Figure 4 in the approved Statement. The calculation included the fittings and appliances to be used on site (see enclosed). If a revised Part G calculation is still required, this can be provided to HDC during the determination of the application.

**Conclusion**

I trust that the contents of this letter is in order and look forward to receiving confirmation that the application has been validated and approved in due course. If you have any queries or require further information, please get in touch.

Yours sincerely,

**Hannah Keyte • MA**
Graduate Planner
[redacted]

Enclosures:

1. Specification for the Fittings and Appliances
2. Photographic evidence of RWH System

## Toilet Specification

Atlas Trade

# SAKKARA CLOSE COUPLED PB CISTERN WITH FITTINGS



| Product Code | SK2WHPCI |
|---|---|
| Weight (Kg) | 14.2 |
| Material | Vitreous china |
| Flushing Volume (L) | 6/4 |
| Flushing Mechanism | Dual Flush Flush Button |
| Inlet | RH Bottom Inlet |
| Cistern fittings included | Yes |
| Pre-Installed/Bagged | Pre-installed |

**Key features:**

- UKCA compliant
- Smooth modern design
- Water saving option

**Description:**
A close coupled cistern with smooth lines, it's a family friendly easy clean cistern featuring dual flush push button operation. This cistern is designed to work on either 6/4 ltrs or 4/2.6 ltrs to aid in water saving.

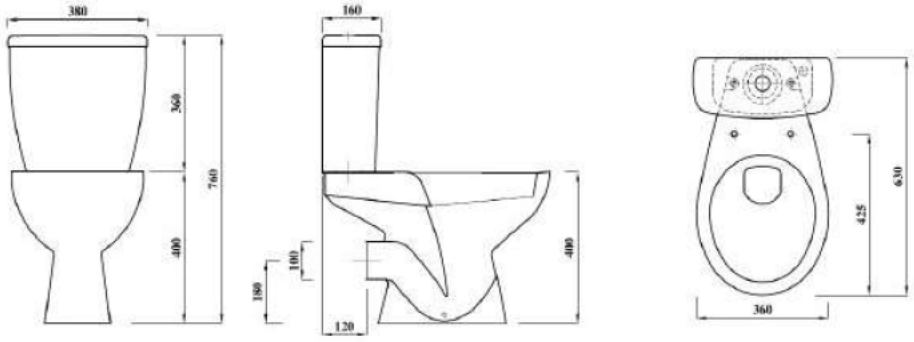


All dimensions are approximate and subject to normal ceramic variation. Although every effort is made not to change the above product specification, Lecico reserve the right to do so without prior notification if necessary. Lifetime ceramic guarantee against manufacturers defects. Full information on guarantees available upon request.

Lecico bathrooms

## Kitchen Tap Specification

**PEGLERFLOW**

***4J4011 – MONO SINK MIXER***

Francis Pegler BY COMAP



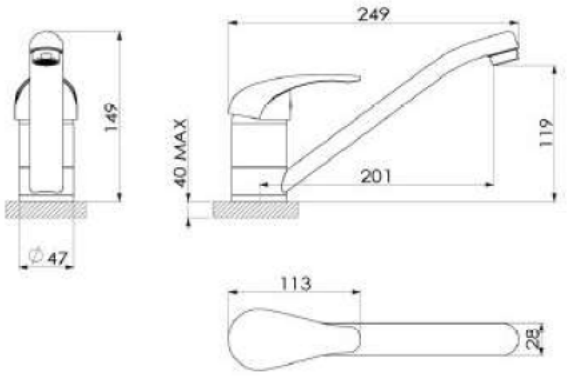


| Specification | |
|---|---|
| Finish | Chrome |
| Body | Brass |
| Fittings | Metal plate, washer, stud & locking nut |
| Connection | M10 – DN8 flexible hoses with ½" BSP threaded ends |

| | |
|---|---|
| Min dynamic pressure | 0.1 |
| Max dynamic pressure | 6 |
| Max static pressure | 16 |
| Max water temperature | 60°C |

**Flow rates**

| Pressure | 0.1 | 0.5 | 1 | 3 |
|---|---|---|---|---|
| L/min | 2.3 | 9.4 | 13.9 | 25.4 |

All Pressures are in Bar.

Dimensions supplied are nominal and subject to tolerance.

Inclusion of aerator (if supplied) or restrictors (sold separately unless stated) will affect flow rate result.

Performance details are based on trials under test conditions and for guidance only.

The Company reserves the right to change product specification without prior notice.

**Features & Benefits**

- 10 YEAR Guarantee
- L Low Pressure
- Flexible Hose
- Flow Straightener
- Flow Aerator
- Single Flow

**Certifications**

WRAS APPROVED PRODUCT — 1804348 - April 23

5.2 l/min — *Tested at 0.2 bar*

COMAP UK Ltd. Unit C6, William Way, Moss Ind Est, St Helens Rd, Leigh. Lancashire. WN7 3PT
www.comaptaps.co.uk

aalberts

*4J4011-PDS-V1*

## Bathroom Tap Specificaiton

**TAPWARE**

# ETHOS

**Ethos Mini Mono Basin Mixer**

Product Code: ETH313

Finish: Chrome

Deva by METHVEN

**Features**

| | |
|---|---|
| Construction: | Brass |
| Valve/Cartridge type: | Ceramic Cartridge |
| Supply: | Suitable for all plumbing systems |
| Working Pressures: | 0.3 - 5.0 bar |
| Inlet connections: | ½" BSP |
| Flexi or Copper: | Flexi Tails |

- Ceramic Cartridge for smooth operation
- Tilt and turn temperature and flow control
- In full colour packaging



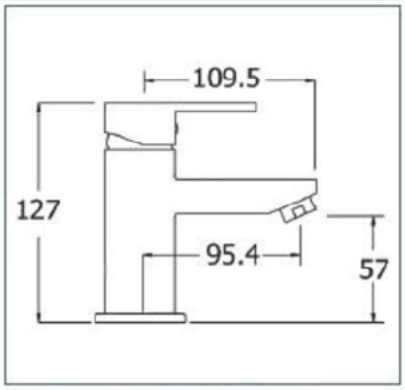


**Flow** (Bar - l/min, open outlet)

Spout

| Flow 0.1 | Flow 0.3 | Flow 0.5 | Flow 1.0 | Flow 2.0 | Flow 3.0 | Flow 4.0 | Flow 5.0 |
|---|---|---|---|---|---|---|---|
| 2.8 | 4.7 | 5.9 | 8.1 | 11.3 | 14.1 | 16.1 | 18 |

kiwa 1912722

WRAS 1912307

12 YEAR GUARANTEE ON ALL DEVA CHROME TAPS *TERMS APPLY

www.deva-uk.com · 0800 195 1602 · sales@uk.methven.com

## Rainwater Harvesting System Service Quote

JRH water management

Home Close
East Firsby
Market Rasen
Lincolnshire
LN8 2DB

Date:13/01/2021

To

Christ's Hospital
The Counting House
Christs Hospital
Horsham
West Sussex
RH13 0TL
Site - Westons Barn Farm
RH13 0BD
Francis Pulvermacher
[redacted]

| Salesperson | Job | Payment Terms | Due Date |
|---|---|---|---|
| MICHAEL JORDEN | Rainwater Harvesting System – Estimate | [redacted] | |

| Qty | Description | Unit Price | Line Total |
|---|---|---|---|
| Overview | To supply and install RWH system to sites – based on information provided -<br>• RWH system to be installed to barn – taking total roof area<br>• Splitting roof into two system – 1 x side for one system, valley and other side second system<br>• Overflows – to 1 x drain back right corner – assuming 6" drain?<br>• Tanks sited as per picture at bottom of estimate<br>• Due to front valley outlet not being able to be taken across due to doors based on this outlet being blocked to make water run to back outlet<br>• All based on pipework for both systems being installed to timber boarding on siding of shed | | |
| RWH SYSTEM | Valley and side system<br>Roof – 1012m2 roof size with average rainfall per year of 850mm with the filters working at 90% of water going to tanks gives – 774,180L per year going to store average per system<br>25mm of rainfall on the roof will collect to tanks – 22,700L<br>• 3 x 22,000L NP tank with 2" outlets and fxf taps<br>• 2 x tank link kits<br>• 1 x Wall mounted filter set with mount brackets<br>• 160mm & 110mm pipe, fittings & clips in black<br>• 6x2 treated timber for filter frame supports<br>• 1 x Mechanical tank water level gauge<br>• Labour for x2 to install inc all screws, glues etc to complete works<br>Side system<br>Roof – 337m2 roof size with average rainfall per year of 850mm with the filters working at 90% of water going to tanks gives – 257,805L per year going to store average per system<br>25mm of rainfall on the roof will collect to tanks – 7582L | [redacted] | [redacted] |

| | | | |
|---|---|---|---|
| | • 1 x 22,000L NP tank with 2" outlets and fxf taps<br>• 1 x Wall mounted filter set with mount brackets<br>• 110mm pipe, fittings & clips in black<br>• 6x2 treated timber for filter frame supports<br>• 1 x Mechanical tank water level gauge<br>• Labour for x2 to install inc all screws, glues etc to complete works | | |
| PLEASE NOTE | • Recommended - Base of 4m x 12m for tanks x 3 and 4m x 4m for 1 x tank<br>• Full access inside and outside of shed for duration of works<br>• Tanks will need to be offloaded and put in location – telehandler needed with driver at all locations<br>• Rubbish removal by customer | | |
| | | ***Subtotal*** | [redacted] |
| | | ***VAT 20%*** | [redacted] |
| | | ***Total*** | [redacted] |

**TERMS:**
**ALL PRICING IS VALID FOR 30 DAYS FROM DATE OF QUOTATION**
**JRH RESERVE THE RIGHT TO AMEND PRICES SHOULD SUBSEQUENT INFORMATION BE AT VARIANCE TO THE SPECIFICATION RECIEVED**
**PAYMENT TERMS AS PER ABOVE AND FINAL PAYMENT DUE WITHIN 48HRS OF JOB COMPLETION**
**JRH DO NOT GUARANTEE THE QUALITY OF THE EXISTING PIPE WORK AND CANNOT BE HELD RESPONSIBLE FOR ANY LEAKS CAUSED THROUGH DEFECTS IN THIS PIPE WORK**
**ALL MATERIALS REMAIN THE PROPERTY OF JRH WATER MANAGEMENT UNTIL FULL PAYMENT IS RECEIVED**

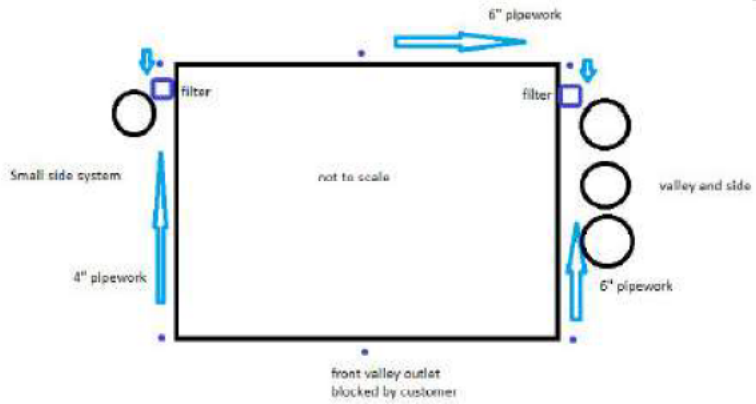

**Enclosure 2**



