

Existing Entrance Elevation
1:50

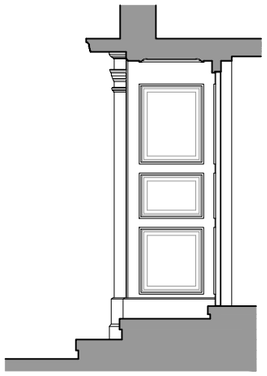

Existing Entrance Section
1:50



Proposed Entrance Elevation
1:50

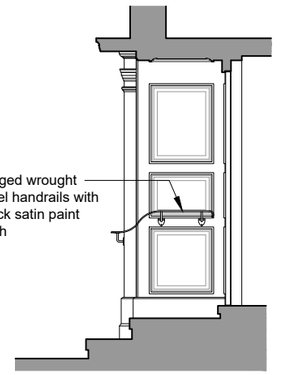

Proposed Entrance Section
1:50

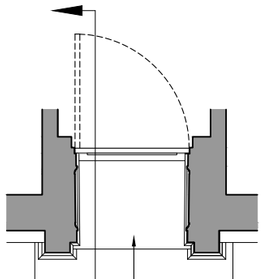

Existing Entrance Plan
1:50



Photo of Existing Entrance

Photo of Existing Elevation

Red line denotes entrance area as shown in drawings

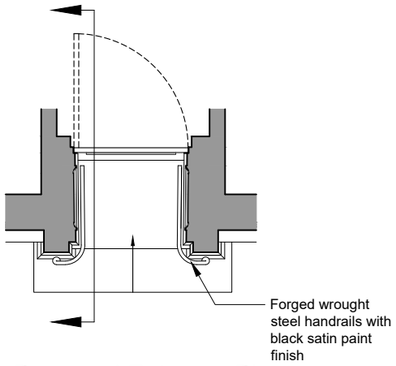

Proposed Entrance Plan
1:50

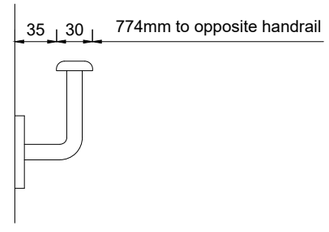

Handrail detail 1:5

0 5m
SCALE

0 0.5m
SCALE

Application Drawing
May 2024

REV	DATE	DESCRIPTION	INITIAL
A	06.06.24	Scale bar added	PP

REVISION:

CHECK ALL DIMENSIONS ON SITE
DO NOT SCALE OFF DRAWING
NOT FOR CONSTRUCTION
DRAWING FOR PLANNING PURPOSES ONLY

NOTES:

CLIENT:
GWCA Solicitors

DESCRIPTION:
Existing & Proposed Entrance
Plan, Elevation and Section

RATHBONE • MILLER
architecture & project management
First Floor, 39 High Street,
Steyning, West Sussex, BN44 3YE
Telephone: 01903 879873

SCALE:	DATE:	DRAWN:	PROJECT:	DRAWING NUMBER:	REVISION:
1:5@A3 1:50@ **A3**	May 24	PD	62 High St Steyning BN44 3RD	22517 - 102	A

© Copyright RATHBONE MILLER LIMITED