STORRINGTON LAWN TENNIS CLUB

COURTS 1-2-3 EXISTING LIGHTING COLUMNS → DIMENSIONS

STORRINGTON LTC
COURTS 1 TO 7
CHANGE OF FLOODLIGHTS TO LED's.

PRG: D/02 Rev "A" TS.
EXISTING LAMPOSTS & UNITS ON
PROPOSED LAMPS COURTS 1, 2 & 3.
(CURRENT) Date: 19/12/23.

EXISTING LAMPS

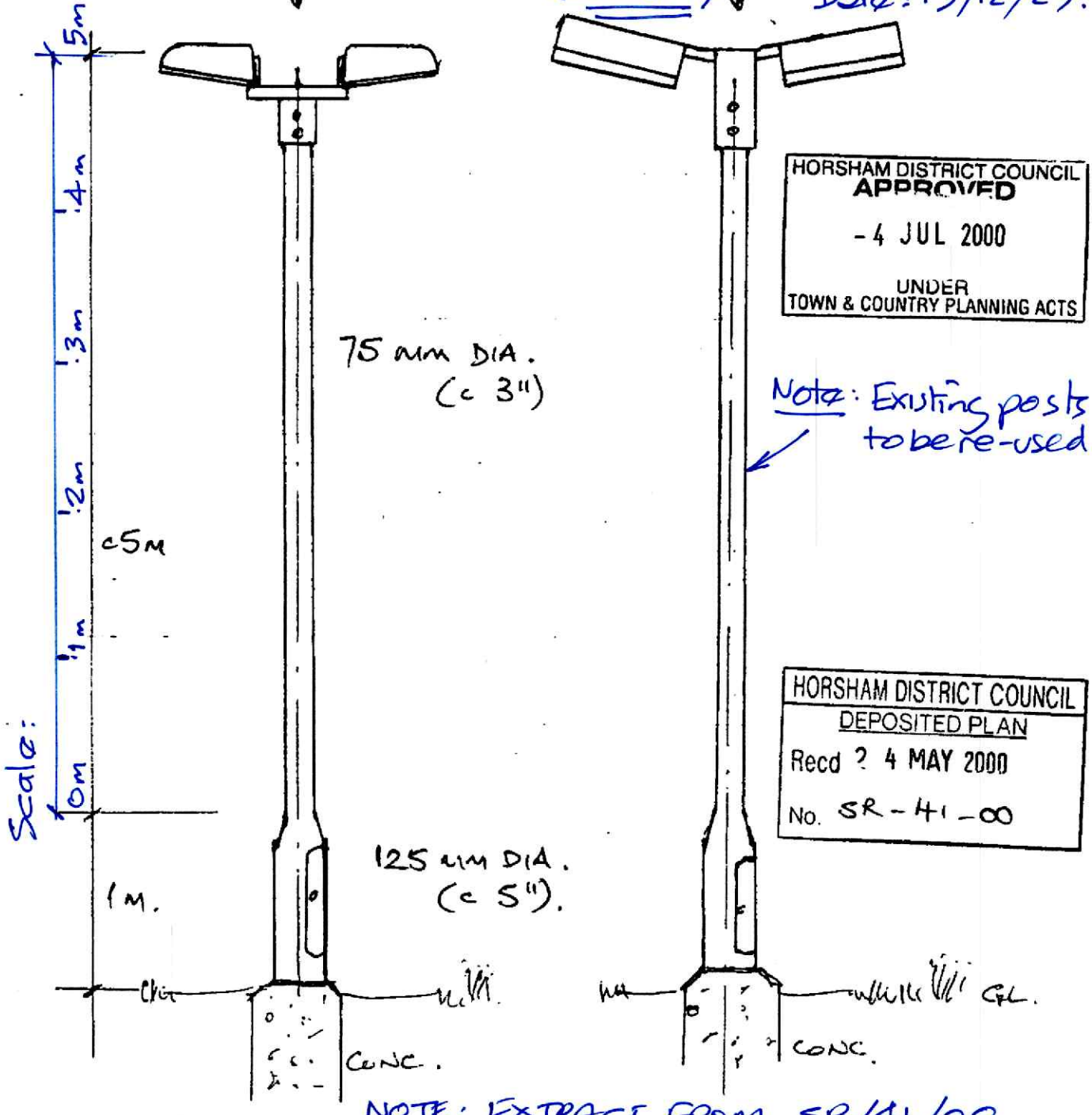

HORSHAM DISTRICT COUNCIL
APPROVED
- 4 JUL 2000
UNDER
TOWN & COUNTRY PLANNING ACTS

Note: Existing posts to be re-used.

HORSHAM DISTRICT COUNCIL
DEPOSITED PLAN
Recd ? 4 MAY 2000
No. SR-41-00

NOTE: EXTRACT FROM SR/41/00 APPROVAL FOR COURTS 1, 2 & 3.

6M OVERALL.
CIRCULAR GREY GALV. STEEL COLUMNS.