ARBORICULTURAL IMPACT ASSESSMENT, METHOD STATEMENT AND TREE PROTECTION PLAN

Oakfield
Coolham Road
Coolham
West Sussex
RH13 3QE

Document date: 18th November 2025

Document ref: PJC/7018/25-02 Rev -

Sussex Office
Rocks Yard, Victoria Road
Herstmonceux, East Sussex.
BN27 4TQ.

PJC Consultancy Ltd
www.pjcconsultancy.com
contact@pjcconsultancy.com
01233 225365 - 01323 832120

Kent Office
The Watermill, The Mill Business Park,
Maidstone Road, Ashford Kent.
TN26 1AE.

This report has been prepared by

PJC Consultancy Ltd

on behalf of

Mr R Benson

Document author

Nick Betts HND For M.Arbor.A

Nick has attained an HND in forestry management and is a professional member of the Arboricultural Association. He has worked in the arboricultural and forestry industries for 25 years. He started his career as a forestry worker before qualifying as a tree surgeon, working in both the private and commercial sectors. He has been a practising consultant since 2004. He is a LANTRA accredited professional tree inspector.

Checked by

Peter Davies FdSc Arboriculture M.Arbor.A

Peter has a Foundation Degree in Arboriculture from the University of Brighton and is a professional member of the Arboricultural Association. He has over fifteen years' experience in the arboricultural industry, originally working as a groundsman and feller, and progressing into consultancy. He is a LANTRA accredited professional tree inspector.

PJC

arboriculture . ecology . landscape

CONTENTS

EXECUTIVE SUMMARY **4**

1 INTRODUCTION **5**

1.1 Instruction 5

1.2 Objectives of report 5

1.3 Contents of report 5

1.4 Documents and information provided 5

1.5 Limitations of report 5

2 ARBORICULTURAL IMPACT ASSESSMENT **6**

2.1 Site visit 6

2.2 The proposals 6

2.3 Tree removals 6

2.4 Access facilitation pruning 6

2.5 Levels 6

2.6 Conclusions 6

3 ARBORICULTURAL METHOD STATEMENT **7**

3.1 General requirements 7

3.2 Phasing of works 7

3.3 Initial tree works 7

3.4 Tree protection barriers 8

3.5 Process if an unforeseen issue relating to trees arises 8

Appendix 1: Tree Constraints Plan 9

Appendix 2: Tree Survey Schedule 10

Appendix 3: Tree Retention Plan 11

Appendix 4: Tree Protection Plan 12

Appendix 5: Tree Protection Fencing Specification 13

Appendix 6: Example Protective Fencing Sign 14

EXECUTIVE SUMMARY

PJC Consultancy has been instructed by Mr R Benson to provide an arboricultural impact assessment and arboricultural method statement to satisfy Condition 3 of planning application DC/23/1011, creation of new access and erection of a field gate.

This report complies with the planning policies of Horsham District Council and complies with the recommendations of British Standard BS5837: 2012 Trees in relation to design, demolition and construction – Recommendations.

The survey was carried out on 17th November 2025. The tree constraints plan and tree survey schedule can be found at Appendix 1 and Appendix 2 respectively.

The proposed layout has been overlaid with the tree constraints plan in order to identify the impacts to the trees to inform this impact assessment and this information has formed the basis of the tree retention plan at Appendix 3, and the tree protection plan at Appendix 4.

One mature English oak has been recommended for removal regardless of the proposals as it is a standing dead tree adjacent to the public highway. A section of hedgerow will also require removal to allow construction of the field entrance and gateway.

Subject to the generic and specific tree protection measures recommended within the arboricultural method statement at section 3 of this report being adhered to, I consider that the proposals represent a minor impact on the amenity of the locality in so far as it is contributed to by trees.

1 INTRODUCTION

1.1 Instruction

1.1.1 PJC Consultancy has been instructed by Mr R Benson to provide an arboricultural impact assessment and arboricultural method statement satisfy Condition 3 of planning application DC/23/1011, creation of new access and erection of a field gate.

1.1.2 This report complies with the planning policies of Horsham District Council and complies with the recommendations of British Standard BS5837: 2012 Trees in relation to design, demolition and construction – Recommendations (the British Standard).

1.2 Objectives of report

1.2.1 This report has been undertaken with the following objectives:

- To identify the tree removals and pruning works that will be required as a result of the proposed development and to assess the impact of the tree works.
- To assess the potential impact the proposed construction works will have on retained trees and provide recommendations for mitigation measures to reduce the impact on the trees.
- To provide a protection methodology for retained trees throughout the demolition and construction period, including the above ground and below ground parts of the trees as well as their rooting medium.

1.3 Contents of report

1.3.1 This report includes:

- A tree constraints plan and tree survey schedule at Appendices 1 & 2 respectively.
- An arboricultural impact assessment at section 2, a tree retention plan at Appendix 3
- An arboricultural method statement at section 3 and a tree protection plan at Appendix 4.

1.4 Documents and information provided

1.4.1 The following documents were used to aid the preparation of this report:

- PJC Initial Arboricultural Report Ref: 7018/25-01
- Manorwood Drawing No. 2307OA-R)-000 Location Plan

1.5 Limitations of report

1.5.1 The following arboricultural impact assessment and method statement have been prepared for the proposal stated in section 1.1 and using the plans and information listed in section 1.4. The report should not be relied upon if the stated proposal or proposed design changes unless the author confirms the changes do not have a bearing on the arboricultural impacts or recommended mitigation measures.

2 ARBORICULTURAL IMPACT ASSESSMENT

2.1 Site visit

2.1.1 The survey was carried out on 17th November 2025. The tree constraints plan and tree survey schedule can be found at Appendix 1 and Appendix 2 respectively.

2.2 The proposals

2.2.1 The proposed layout has been overlaid with the tree constraints plan in order to identify the impacts to the trees to inform this impact assessment and this information has formed the basis of the tree retention plan at Appendix 3, and the tree protection plan at Appendix 4.

2.3 Tree removals

2.3.1 Trees to be removed for the proposed development are shown with dashed outlines on the tree retention plan at Appendix 3 and are shaded to indicate their BS5837 tree category. A summary is listed at Table 1 below.

Table 1: Tree removals summary

Tree number	Species	Category	Justification for tree removal
T2	English oak,	U	Standing dead tree adjacent to public highway
Section of H4	Blackthorn, Hawthorn	B1	Removal limited to a small section of a much larger linear hedgerow. Removal of the small section will not be detrimental to the local or wider landscapes

2.4 Access facilitation pruning.

2.4.1 Based on the information currently available, it is anticipated that the crowns of all remaining retained trees will be located a sufficient distance from proposed construction activities and expected construction access routes so as not to require pruning.

2.4.2 Any additional requirements for pruning that cannot be predicted at this stage in the design process (e.g. for contractor compound or movement of large or specialist plant machinery) shall be discussed at the pre-commencement meeting with the project arboriculturist and agreed with the local authority arboricultural officer. No works may be carried out on protected trees without prior permission from the local authority.

2.5 Levels

2.5.1 The levels of the site are broadly flat and level. The existing levels have been incorporated into the design process and no change of levels are proposed.

2.6 Conclusions

2.6.1 Trees requiring removal to facilitate the proposed development comprise 1x category U standing dead tree and a small section of a category B hedgerow. All other arboricultural features will be retained and incorporated into the proposed site layout.

2.6.2 Based on the above assessment, trees recommended for retention in this report can be protected during the construction period and successfully integrated into the site post development.

3 ARBORICULTURAL METHOD STATEMENT

3.1 General requirements

3.1.1 The arboricultural method statement and tree protection plan shall remain on site for the duration of construction works and be available to site operatives at all times. All operatives at the site shall be briefed about tree related factors as part of their site induction.

3.1.2 Any variation from the methodology described in this method statement shall be discussed with the supervising arboriculturist and agreed with the local authority arboricultural officer.

3.2 Phasing of works

3.2.1 To ensure trees are protected throughout the development, the proposed development shall occur in the following order:

Table 1: Phasing of works

Works Order	Operation	Notes
1	Initial tree works.	The tree works contractor shall undertake the tree removals specified in the arboricultural impact assessment. Completion of these works will be required to enable the installation of tree protection barriers
2	Installation of tree protection barriers.	Tree protection fencing shall be installed in the locations shown on the tree protection plan and to the specification described in this method statement.
3	Construction phase.	The tree protection barriers shall be maintained, and the construction exclusion zones observed throughout the construction phase.

3.3 Initial tree works

3.3.1 The tree removals specified in the arboricultural impact assessment shall be carried out as the first stage of development. Any requirements for access facilitation pruning which have not been anticipated on the date of this report shall be discussed at the pre-commencement meeting with the project arboriculturist and be communicated to the local authority arboricultural officer.

3.3.2 Tree stumps and vegetation located within the root protection areas of retained trees shall be cleared with controlled hand tools (e.g. stump grinder/brush cutter). Plant machinery shall not be used to scrape vegetation, ‘grub out’ stumps within root protection areas, or access the site until the tree protection barriers have been installed.

3.3.3 If bonfires are lit to dispose of arisings from the vegetation or tree clearance works, an assessment of wind direction and strength shall be made to ensure flames cannot extend within 5m of any part of a retained tree. No bonfires shall be lit within a root protection area.

3.3.4 Trees should be checked for protected species before works are undertaken. It is against the law to disturb bats or their roosts under the Conservation of Habitat and Species Regulations. Nesting birds are protected by the Wildlife and Countryside Act. If protected species are discovered, Natural England should be contacted for advice.

3.3.5 The tree works contractors should carry out all tree works to BS3998: 2010 Tree works – recommendations as modified by research that is more recent. They should also carry relevant, adequate and up to date insurance.

3.3.6 It is suggested that an Arboricultural Association approved contractor carry out all tree works. Approved contractors are expected to work to industry best standards. The Arboricultural Association website (www.trees.org.uk) contains contact details and information on engaging a suitable contractor.

3.4 Tree protection barriers

3.4.1 The root protection areas of retained trees must be left free from disturbance, and protected from contamination or compaction during the proposed works.

3.4.2 The tree protection fencing shall be installed before any plant activity, ground works or construction activities commence at the site. They shall be maintained in situ until the soft landscaping phase of development when all other construction activities in the vicinity have been completed, and excess construction materials and plant machinery have been removed from site. Any damage that occurs to the tree protection barriers during the construction period must be rectified immediately, prior to other construction activities recommencing in the vicinity.

3.4.3 Tree protection fencing shall be installed in the locations shown on the tree protection plan. The specification for tree protection fencing shall be metal welded mesh panels (e.g. Heras panels), in concrete or rubber feet. The panels shall be supported by metal stabiliser struts mounted on either a base plate secured by ground pins, or in a block tray (refer to Appendix 2). Any variation from this specification for tree protection fencing shall be discussed with the project arboriculturist and agreed in writing with the local authority arboricultural officer.

3.4.4 Signs shall be affixed to the fencing as shown in Appendix 3 to explain its purpose. The signs shall be affixed at a reasonable size and frequency to ensure they are easily visible to operatives at the site.

3.5 Process if an unforeseen issue relating to trees arises

3.5.1 If significant root growth is disturbed during construction activities that are not within the scope of this report, the work shall cease until the project arboriculturist has been consulted. Roots greater than 25mm in diameter or dense/matted fibrous roots shall be considered significant root growth. It should be remembered that whilst root protection areas are part of industry best practice, tree root growth is influenced by a number of factors and may not conform to expected ideals.

3.5.2 If at any time during the construction process, damage is inadvertently caused to a tree, the project arboriculturist shall be notified to assess the likely implications and to prescribe potential remedial measures to be implemented. Damage can be in the form of chemical or fuel spillage, mechanical damage to either the above ground parts of the tree or the roots, fire or any other unforeseen circumstance.

Appendix 1: Tree Constraints Plan

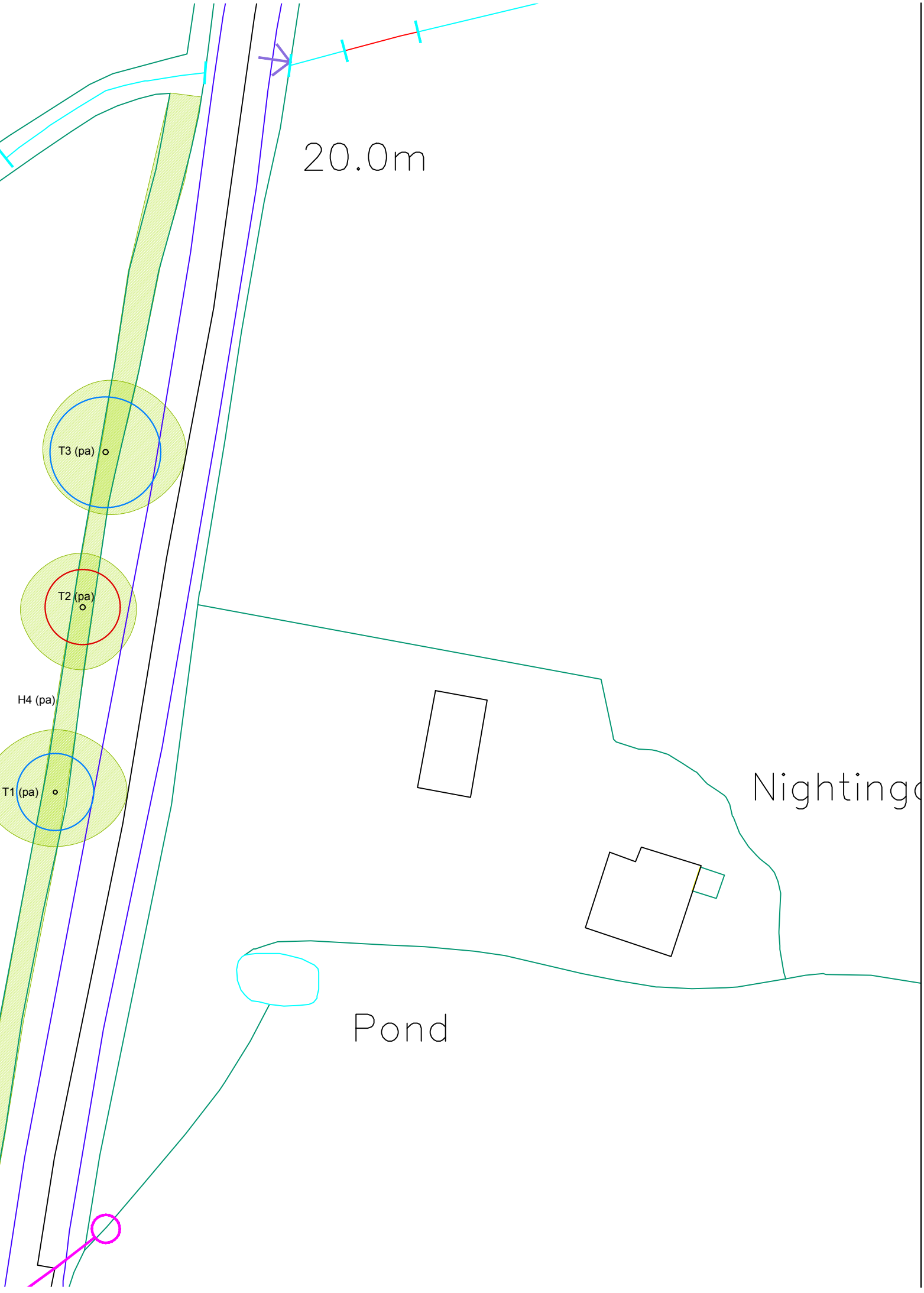

Key:

Root protection area for category B* tree

Root protection area for category U* tree

Tree canopy

* Tree categorised in accordance with BS 5837:2012 '*Trees in relation to design, demolition and construction - Recommendations*'.

Tree survey schedule contained within the arboricultural report ref. PJC/7018/25-01 contains further information for each tree.

This drawing should be viewed in colour.

Tree numbers suffixed with PA indicate the tree position is approximate.

Scale (m)
0 2 4 6 8 10 15 20

Drawing no: PJC/7018/25/A **Rev:** - **Sheet number:** 1 of 1

Client and site:
Mr R Benson
Oakfield
Coolham Road
Coolham
West Sussex

Drawing title: Tree Constraints Plan

Date drawn: 18/11/2025

Scale: 1:500 at A3

Drawn by: NB **Checked by:** PD

PJC Consultancy
Rocks Yard, Victoria Road,
Herstmonceux, Hailsham, East
Sussex, BN27 4TQ.

t: 01323 832120
e: contact@pjcconsultancy.com
w: www.pjcconsultancy.com

Appendix 2: Tree Survey Schedule

Site: Oakfield, Coolham Road, Coolham, West Sussex

Survey date: 17/11/2025

Surveyor: Nick Betts

Tree Survey Schedule

Tree ref.	Species	Height (m)	Stem diameter (mm)	Branch spread (m)	Crown clearance (m)	Age class	Physiological condition	Structural condition	Comments	Preliminary management recommendation	Category grading	Root Protection Area (m^2)	Root Protection Radius (m)
T1	English oak, (Quercus robur)	16	360	N: 7 E: 8 S: 6 W: 8	Crown: 6 Branch: W	Mature	Good	Good	No major visible defects	No action required at date of survey	B1	58.6	4.3
T2	English oak, (Quercus robur)	14	340	N: 6 E: 6 S: 7 W: 7	Crown: 6 Branch: W	Mature	Poor	Poor	Standing dead tree	Fell regardless of proposed works as it is adjacent to public highway	U	52.3	4.1
T3	English oak, (Quercus robur)	15	520	N: 8 E: 9 S: 7 W: 7	Crown: 6 Branch: W	Mature	Good	Good	No major visible defects	No action required at date of survey	B1	122.3	6.2
H4	Blackthorn, (Prunus spinosa) Hawthorn, (Crategus monogyna)	2	100	N: 1 E: 1 S: 1 W: 1	Crown: 0 Branch: 0	Mature	Good	Good	No major visible defects	Remove section of hedgerow to allow for creation of new access	B1	4.5	1.2

Appendix 3: Tree Retention Plan

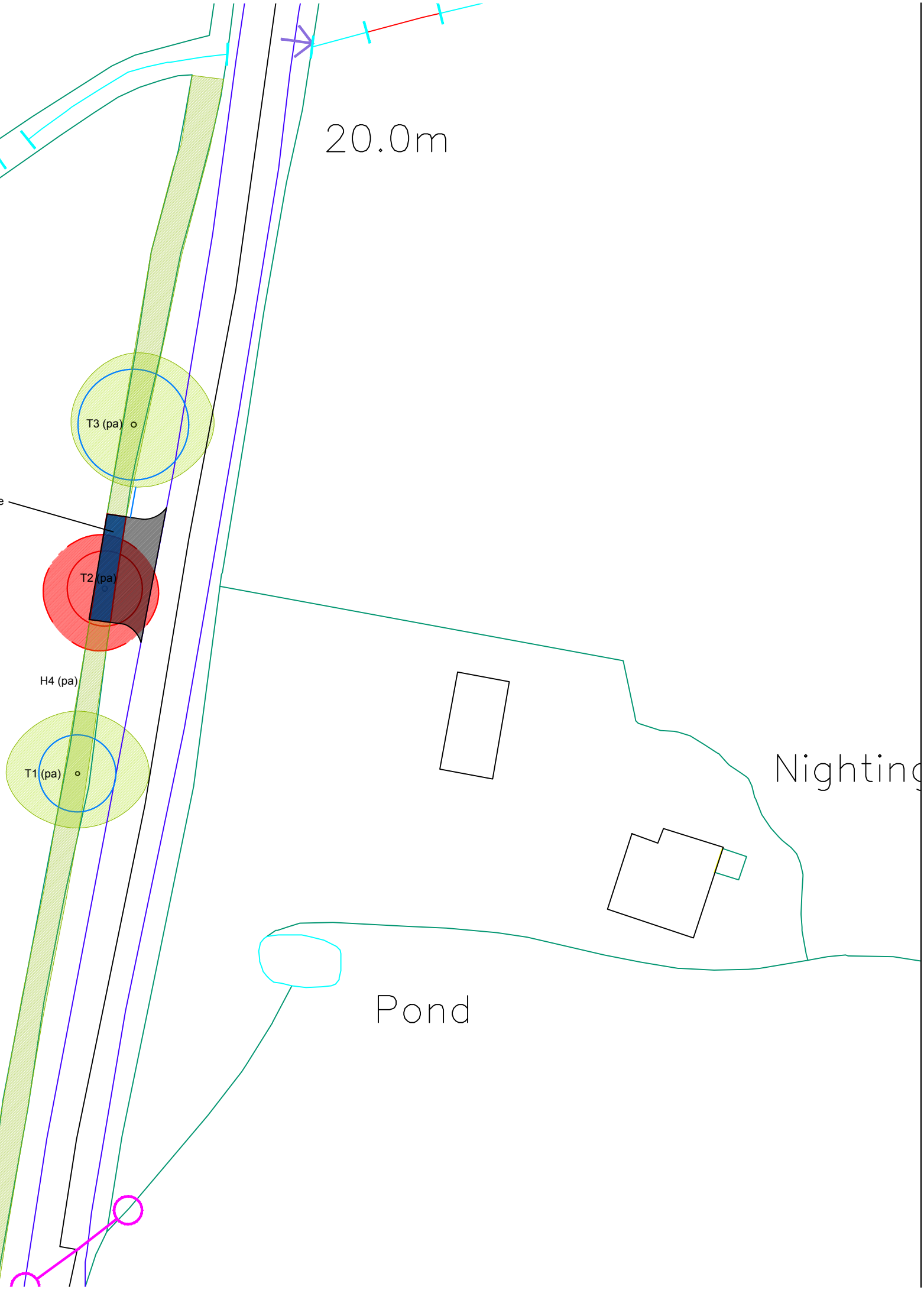

Key:

Root protection area for category B* tree to be retained

Canopy of tree to be retained

Canopy of category B* tree to be removed

Canopy of category U* tree to be removed

* Tree categorised in accordance with BS 5837:2012 '*Trees in relation to design, demolition and construction - Recommendations*'.

Tree Survey Schedule contained within the arboricultural report ref. PJC/7018/25-02 contains further information for each tree.

This drawing should be viewed in colour.

Tree numbers suffixed with PA indicate the tree position is approximate.

Drawing no: PJC/7018/25/B **Rev:** - **Sheet number:** 1 of 1

Client and site:
Mr R Benson
Oakfield
Coolham Road
Coolham
West Sussex

Drawing title: Tree Retention Plan

Date drawn: 18/11/2025

Scale: 1:500 at A3

Drawn by: NB **Checked by:** PD

PJC Consultancy
Rocks Yard, Victoria Road,
Herstmonceux, Hailsham, East
Sussex, BN27 4TQ.

t: 01323 832120
e: contact@pjcconsultancy.com
w: www.pjcconsultancy.com

Appendix 4: Tree Protection Plan

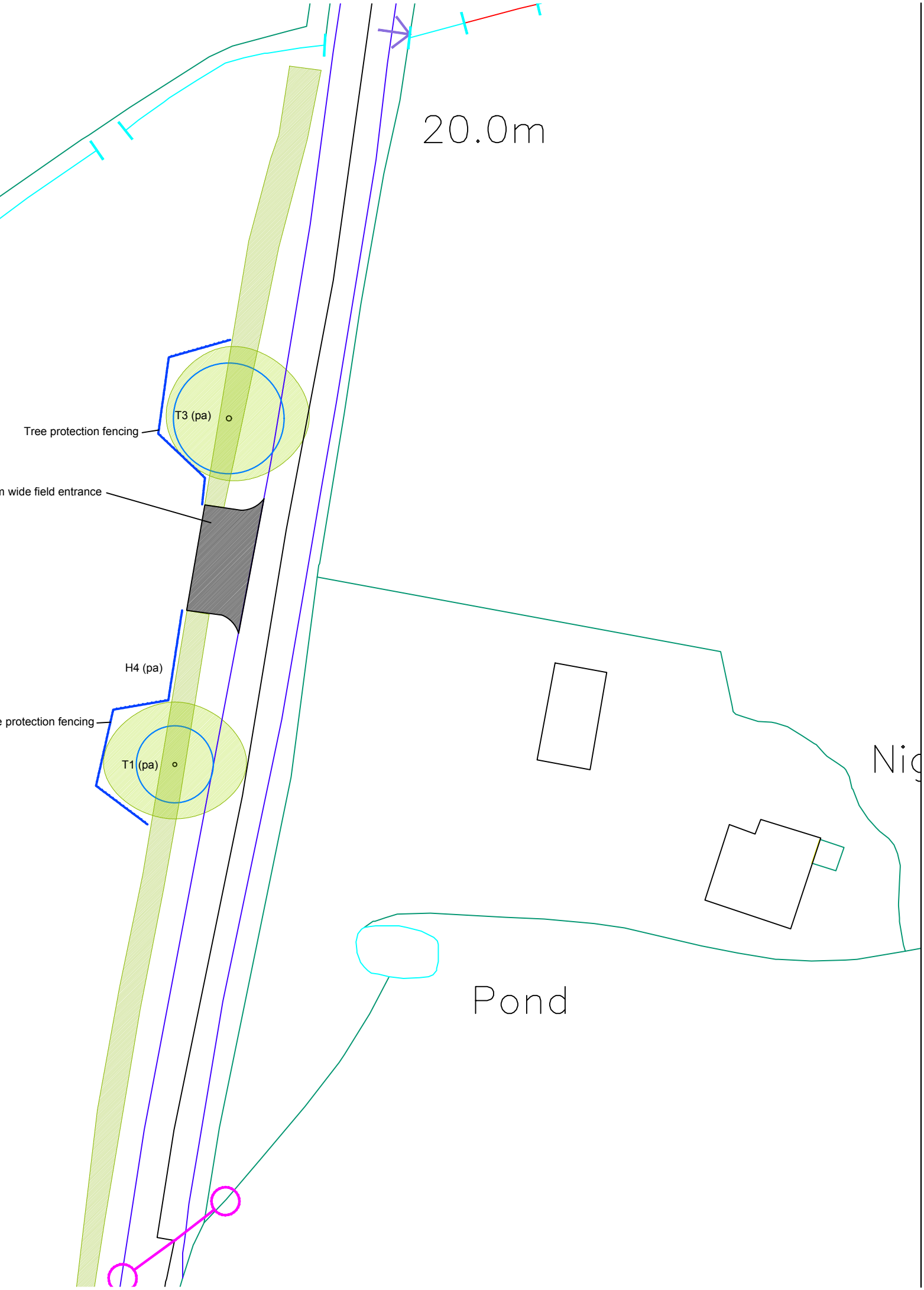

Key:

Root protection area for tree to be retained

Canopy of tree to be retained

Tree protection fencing

Tree Survey Schedule contained within the arboricultural report ref. PJC/7018/25-02 contains further information for each tree.

This drawing should be viewed in colour.

Specification for tree protection fencing:

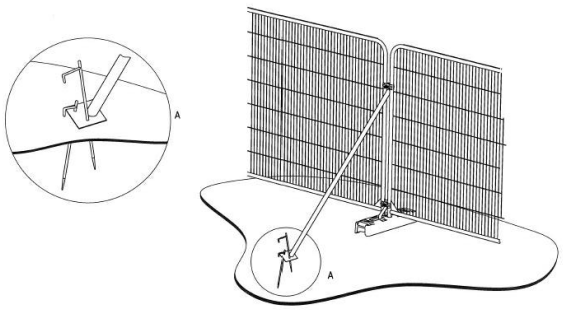

a) Stabilizer strut with base plate secured with ground pins

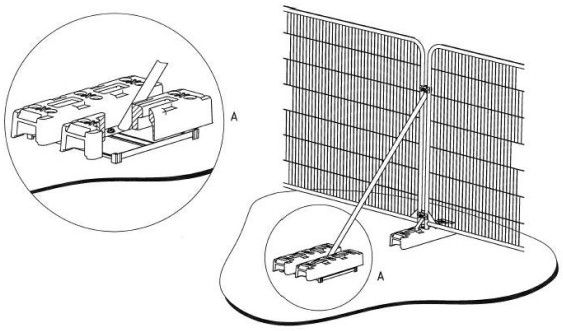

b) Stabilizer strut mounted on block tray

Drawing no: PJC/7018/25/C **Rev:** - **Sheet number:** 1 of 1

Client and site:
Mr R Benson
Oakfield
Coolham Road
Coolham
West Sussex

Drawing title: Tree Protection Plan

Date drawn: 17/11/2025

Scale: 1:500 at A3

Drawn by: NB **Checked by:** PD

PJC Consultancy
Rocks Yard, Victoria Road,
Herstmonceux, Hailsham, East
Sussex, BN27 4TQ.

t: 01323 832120
e: contact@pjcconsultancy.com
w: www.pjcconsultancy.com

Appendix 5: Tree Protection Fencing Specification

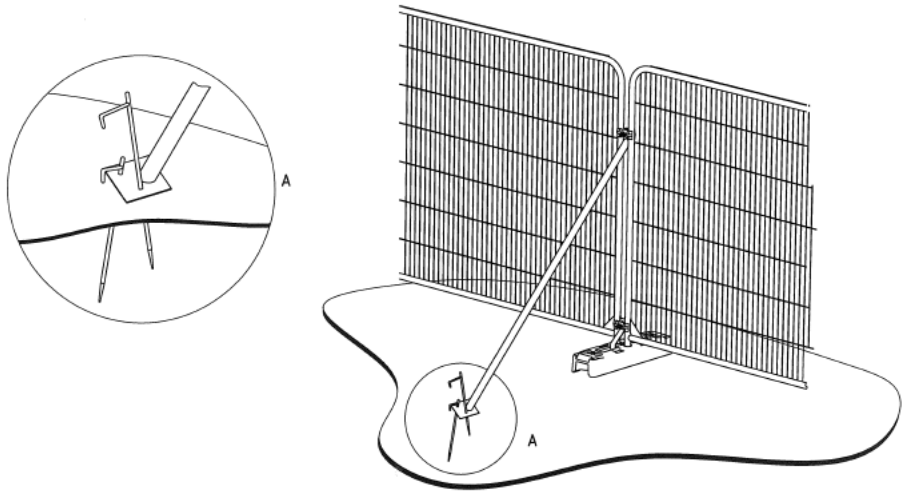

a) Stabilizer strut with base plate secured with ground pins

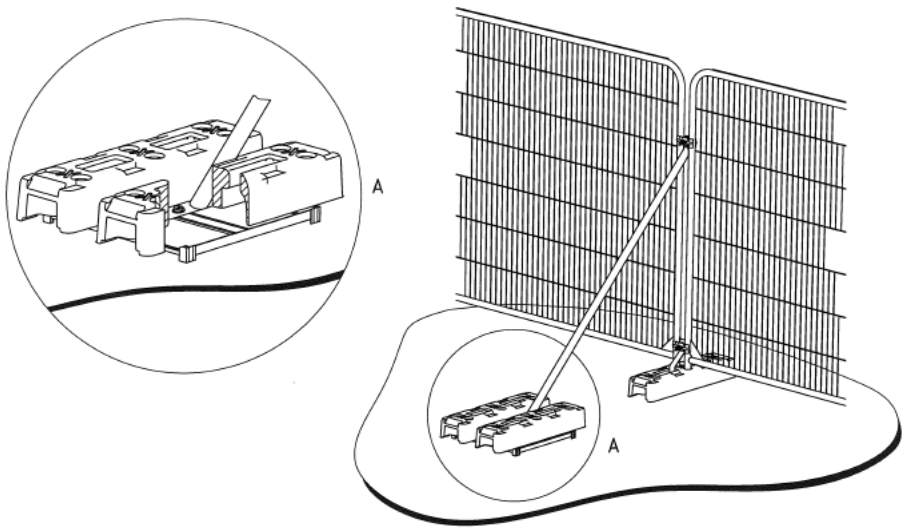

b) Stabilizer strut mounted on block tray

Appendix 6: Example Protective Fencing Sign



CONTACT DETAILS

Sussex Office:

Rocks Yard

Victoria Road

Herstmonceux

Hailsham

East Sussex

BN27 4TQ

Tel: 01323 832120

Kent Office:

The Watermill

The Mill Business Park

Maidstone Road

Ashford

Kent

TN26 1AE

Tel: 01233 225365

Author: Nick Betts

Date: 18th November 2025

E-mail: nick@pjcconsultancy.com