Consulting Civil Engineers

Proposed Dwelling Fittings Survey

The Field, Brighton Road, Henfield

For

Garry Marshall

Rev – **P1**

Reference **C2831**

Date **14th May 2025**

Revision	Date of Issue	Comments	Prepared By	Checked By
P-	04.04.2025	Initial Issue	LT	CS
P1	14.05.2025	Product Specification Appendices Added	LT	CS

Richard Cobden House, Lion Street, Chichester, West Sussex, PO19 1LW
Tel: 01243 933253 E: mail@cgscivils.co.uk W: www.cgscivils.co.uk

1 Introduction

1.1.1 CGS Civils Ltd has been appointed by Garry Marshall to undertake a survey of the fittings currently being installed within the new 4-bedroom dwelling currently being constructed at The Field, Brighton Road, Woodmancote, Henfield. This report has been carried out in support of a Water Neutrality Report (refer to C2831 Water Neutrality Report).

1.1.2 The purpose of this report is to provide an overview on the fittings currently installed, or about to be installed within the proposed 4-bedroom dwelling and to confirm whether they comply with the guidance outlined within the Water Neutrality Report (refer to C2831 Water Neutrality Report).

2 Proposed 4-bedroom dwelling at The Field, Brighton Road, Woodmancote

Fittings	Type of Fitting	Water usage (l/p/day)
Master Bedroom Toilet (Refer to Appendix B) 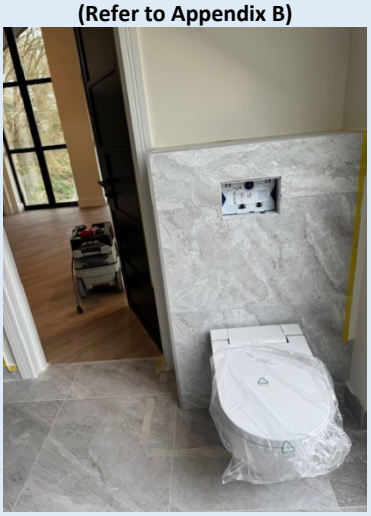 **Bedroom 2 Toilet** (Refer to Appendix C) 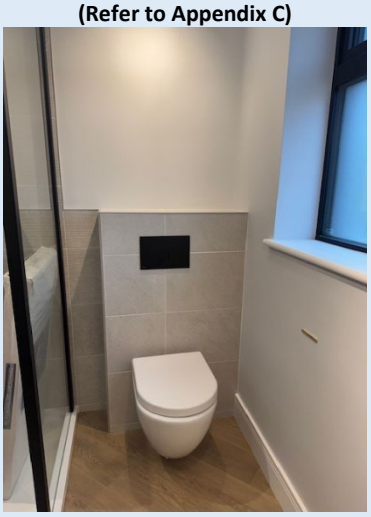 **Bedroom 3 Toilet** (Refer to Appendix D) 	Toilets	5.84 – full flush 7.70 – part flush This is calculated from the toilet's full flush volume of 4 litres and a part flush volume of 2.6 litres.

Bedroom 4 Toilet **(Refer to Appendix E)** 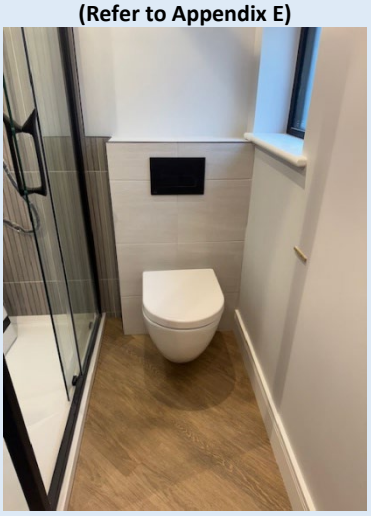 **Cloakroom Toilet** **(Refer to Appendix F)** 		
Master Bedroom Basin Taps **(Refer to Appendix B)** 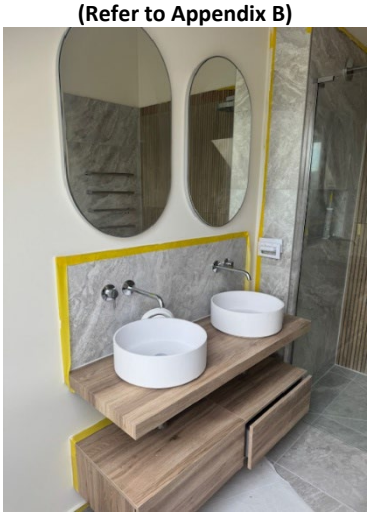	Taps (excluding kitchen)	9.48 This is calculated from the taps' flow rate of 5 l/min.

Bedroom 2 Basin Taps
(Refer to Appendix C)



Bedroom 3 Basin Taps
(Refer to Appendix D)



Bedroom 4 Basin Taps
(Refer to Appendix E)



Cloakroom Basin Taps **(Refer to Appendix F)**  **Utility Room Basin Taps** **(Refer to Appendix G)** 		
Bedroom 3 Bath **(Refer to Appendix D)** 	Bath (shower also present)	12.98 This is calculated from the bath's capacity of 118 litres.

Master Bedroom Shower **(Refer to Appendix B)** 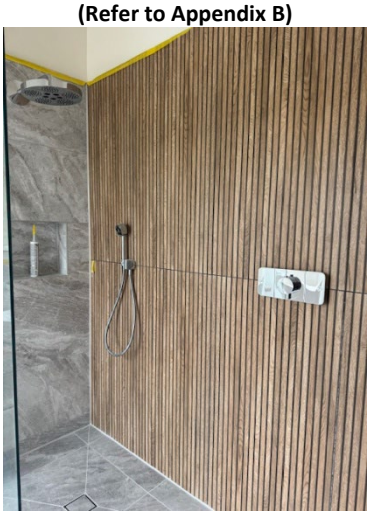 **Bedroom 2 Shower** **(Refer to Appendix C)**  **Bedroom 3 Shower** **(Refer to Appendix D)** 	Shower (bath also present)	34.96 This is calculated from the shower's flow rate of 8 l/min.

Bedroom 4 Shower **(Refer to Appendix E)** 		
Kitchen Sink **(Refer to Appendix G)** 	Kitchen sink taps	7.90 This is calculated from the tap's flow rate of 4 l/min.
Washing Machine **(Refer to Appendix G)** 	Washing machine	11.193 This is calculated from the washing machine's litre/kg dry load rate of 5.33.
PHOTO UNAVAILABLE **(Refer to Appendix G)**	Dishwasher	2.628 This is calculated from the dishwasher's litre/place setting rate of 0.73 l/min.
	Total water demand of the property's use as a dwelling (l/p/day) with normalisation factor and 5l/p/day added for outdoor use (refer to appendix A):	92.143

3 Conclusion

3.1.1 As outlined within the above calculations, the fittings installed, or due to be installed within the proposed dwelling will use 92.143 l/p/day. This is an improvement over the approved water neutrality report which stated a usage of 102.24 l/p/day, resulting in the proposed dwelling not only adhering to the approved report, but also providing betterment.

4 Appendices

4.1 Appendix A:

Table 2 – Water Calculator from Building Regulations Part G – Information input from proposed site.

The Water Calculator for New Dwellings with Water efficient measures					
Installation Type	Unit of measure	Volume/ flow rate	Use factor	Fixed use	Litres/person/day
WC (Single Use)	Flush volume (l)	0	4.42	0	0
WC (Dual Flush)	Full Flush Vol.	4	1.46	0	5.84
	Part Flush vol.	2.6	2.96	0	7.70
WC (Multiple Fittings)	Average effective flush volume (l)	0	4.42	0	0
Taps (excl. Kitchen)	Flow rate (l/min)	4	1.58	1.58	7.90
Bath (shower also present)	Capacity to overflow (l)	118	0.11	0	12.98
Shower (bath also present)	Flow rate (l/min)	8	4.37	0	34.96
Bath only	Capacity to overflow (l)	0	0.5	0	0
Shower only	Flow rate (l/min)		5.6	0	0
Kitchen sink taps	Flow rate (l/min)	5	0.44	10.36	12.56
Washing Machine	Litres/kg dry load	5.33	2.1	0	11.193
Dishwasher	litres/place setting	0.73	3.6	0	2.628
Waste disposal unit	litres/use	0	3.08	0	0
Water softener	litres/person/day	0	1	0	0
		Total Calculated use (l/p/d)			95.761
		Contribution from greywater (l/p/d)			0
		Contribution from rainwater (l/p/d)			0
		Normalisation factor			0.91
		External water use			5
		Total water consumption (36(1)) (l/p/d)			92.143

4.2 Appendix B:

Product Specifications for fittings installed within the dwelling's master bedroom:

AXOR One
Single lever basin mixer for concealed installation wall-mounted with lever handle and spout 220 mm
Finish: **Chrome** Art. no. : **48120000**



product features

- consists of: single lever basin mixer for concealed installation wall-mounted, waste set
- spout 220 mm long
- handle variant: lever handle
- wall-mounted
- spray type: normal spray
- maximum flow rate at 3 bar: 5 l/min
- min. operating pressure: 1 bar
- max. operating pressure: 10 bar
- ceramic cartridge
- free flow non-closing waste
- handle can be positioned on the right or left, depending on the basic set installation
- WRAS 2209335

Article Details

Price excl. VAT £ 429.17

Technology

AirPower

EcoSmart

Design awards

DESIGN AWARD 2021

Certificates / Sustainability

WRAS APPROVED PRODUCT

Product image



Scale drawing

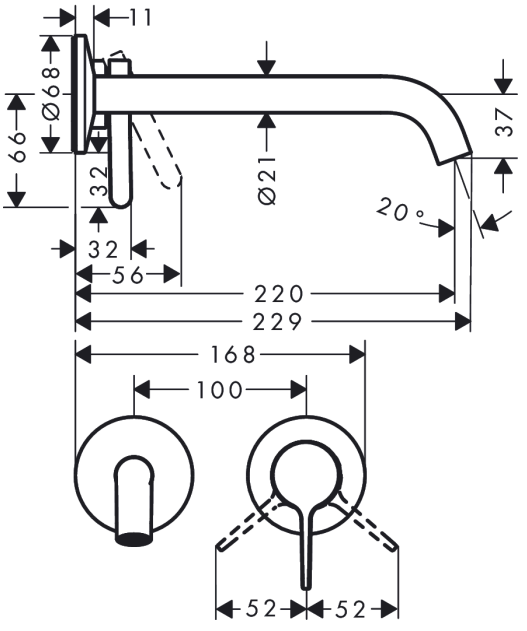

AXOR One
Single lever basin mixer for concealed installation wall-mounted with lever handle and spout 220 mm
Finish: **Chrome** Art. no. : **48120000**



Flowchart

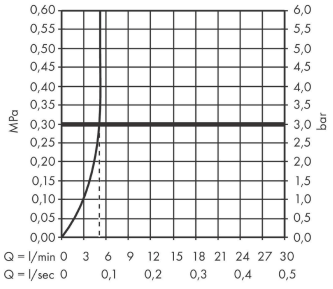

AXOR

AXOR One
Single lever basin mixer for concealed installation wall-mounted with lever handle and spout 220 mm
Finish: **Chrome** Art. no. : **48120000**



Exploded Drawing

Year of production: **>06/21**

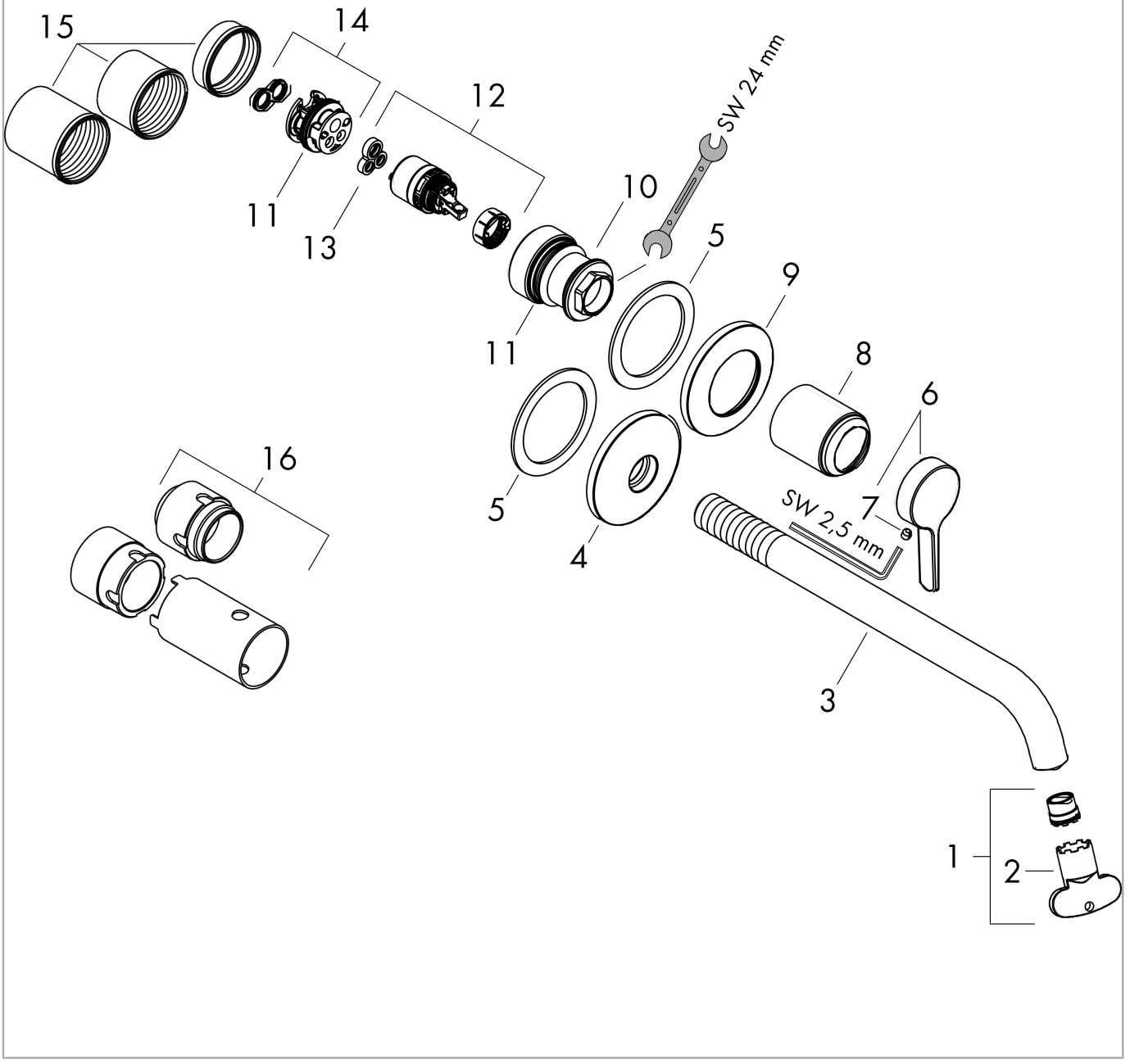

AXOR

AXOR One
Single lever basin mixer for concealed installation wall-mounted with lever handle and spout 220 mm
Finish: **Chrome** Art. no. : **48120000**



Spare part list

Year of production: **>06/21**

Pos.		Art. no.	Price	PU
1	aerator cpl.	93118000	£ 26.00	1
2	special tool	98987000	£ 9.20	1
3	spout 220 mm	94346000	£ 98.00	1
4	escutcheon for spout	94348000	£ 140.00	1
5	washer	97600000	£ 13.60	1
6	handle	94347000	£ 52.00	1
7	hollow set screw M5x5	98446000	£ 3.30	1
8	sleeve	93989000	£ 36.00	1
9	escutcheon for handle	94349000	£ 112.00	1
10	nut	94752000	£ 36.00	1
11	O-ring 26x2	98147000	£ 3.30	1
12	cartridge, assy	93760000	£ 98.00	1
13	seal	93383000	£ 13.60	1
14	adapter for cartridge	95634000	£ 13.60	1
15	fixing set	97971000	£ 44.00	1
16	extension 25 mm	13586000	-	1
a	pop up waste	51301000	-	1
b	adapter for exchanged connections	93819000	£ 176.00	1

AXOR One
Hand shower 75 1jet EcoSmart
Finish: **Chrome** Art. no. : **48651000**



product features

- shower head size: 73 mm
- spray type: PowderRain
- maximum flow rate at 3 bar: 9,1 l/min
- minimum operation pressure: 0,8 bar
- operating pressure: min. 1 bar/max. 6 bar
- material: metal
- with internal water conduction
- rinseable filter washer
- connection thread: G ½
- WRAS 2207323

Article Details

Price excl. VAT £ 120.83

Technology

EcoSmart

Quick Clean

Design awards

DESIGN AWARD 2021

Certificates / Sustainability

WRAS APPROVED PRODUCT

Product image



Scale drawing

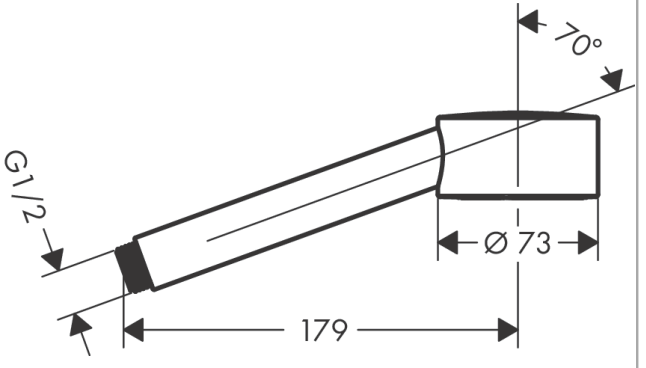

AXOR One
Hand shower 75 1jet EcoSmart
Finish: **Chrome** Art. no. : **48651000**



Flowchart

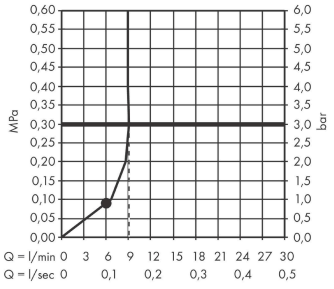

The consumption was measured in combination with the appropriate fittings (thermostat/mixer/ in-wall valve) to reflect actual application in practice.

AXOR One
Overhead shower 280 1jet with shower arm
Finish: **Chrome** Art. no. : **48491000**



product features

- consists of: overhead shower, shower arm
- shower head size: 280 mm
- spray type: PowderRain and Rain in combination
- flow rate PowderRain and Rain spray in combination at 3 bar: 12,3 l/min
- outlet from: 8.7 l/min
- maximum flow rate 12,3 l/min at 3 bar
- operating pressure: min. 1,5 bar/max. 10 bar
- overhead shower angle adjustable
- material spray disc: metal
- overhead shower removable for cleaning
- shower arm length: 390 mm
- installation: wall
- connection thread: G ½
- WRAS 2207323

Article Details

Price excl. VAT £ 1,041.67

Technology

Quick Clean

Design awards

DESIGN AWARD 2021

Certificates / Sustainability

WRAS APPROVED PRODUCT

Product image



Scale drawing

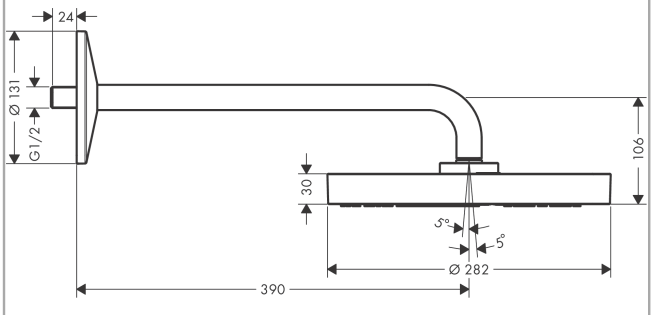

AXOR One
Overhead shower 280 1jet with shower arm
Finish: **Chrome** Art. no. : **48491000**



Flowchart

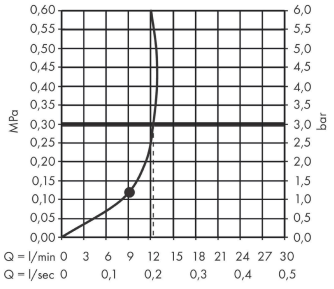

The consumption was measured in combination with the appropriate fittings (thermostat/mixer/ in-wall valve) to reflect actual application in practice.

AXOR

AXOR One
Overhead shower 280 1jet with shower arm
Finish: **Chrome** Art. no. : **48491000**



Exploded Drawing

Year of production: **>04/21**

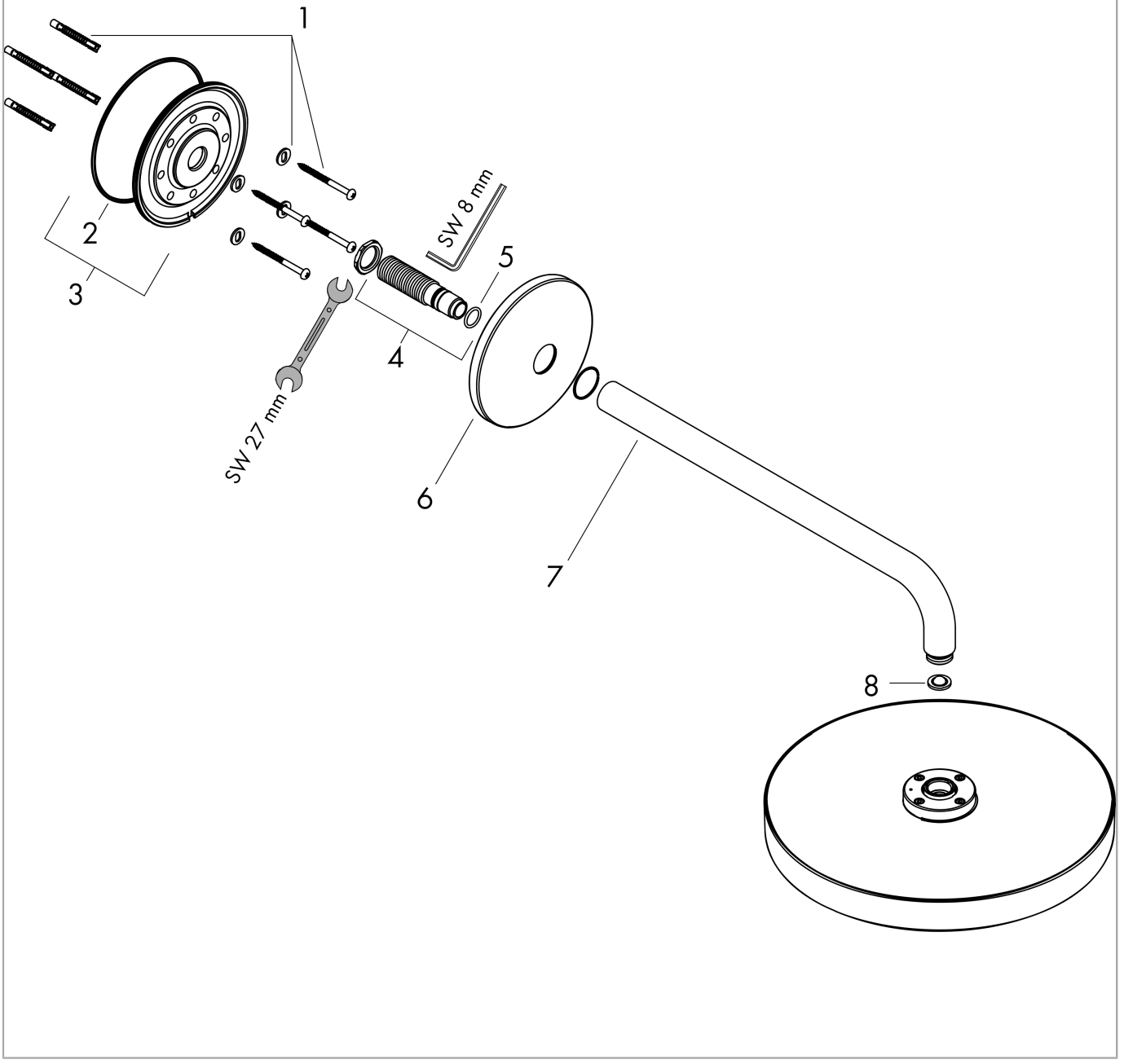

AXOR

AXOR One
Overhead shower 280 1jet with shower arm
Finish: **Chrome** Art. no. : **48491000**



Spare part list

Year of production: **>04/21**

Pos.		Art. no.	Price	PU
1	mounting set	96179000	£ 13.60	1
2	support element	93962000	£ 140.00	1
3	O-ring 120x2,5	93399000	£ 6.20	1
4	connecting thread	93418000	£ 52.00	1
5	O-ring 14x2	98129000	£ 3.30	1
6	escutcheon	93963000	£ 66.00	1
7	shower arm	93964000	£ 112.00	1
8	filter packing	93774000	£ 9.20	1

PCR-E 8.0ltr Shower regulator, White, A5.2221.00001
Finish: Art. no. : **07002282**

Description

Article Details

Price excl. VAT	£ 3.83

Product image



Geberit Duofix frame for wall-hung WC, 112 cm, with Sigma concealed cistern 12 cm



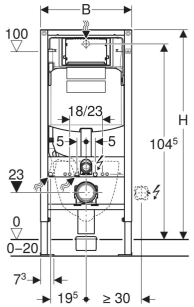

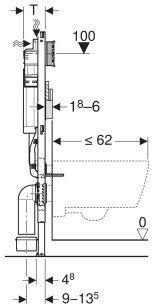

APPLICATION PURPOSES

- For drywall construction
- For installation in part or room-height prewall installations
- For installation in room-height installation walls
- For installation in part or room-height Geberit Duofix system walls
- For wall-hung WCs with connection dimensions in accordance with EN 33:2011
- For wall-hung WCs with projection up to 62 cm
- For floor constructions 0–20 cm

CHARACTERISTICS

- Statically self-supporting frame, protected against corrosion with powder coating
- Frame with ø 9 mm drilling holes for fastening in wood frame construction
- Frame prepared for support brackets for WC ceramic appliances with small contact surfaces
- Galvanized feet
- Feet adjustable 0–20 cm
- Non-slip leg supports
- Rotatable foot plates
- Foot plate depth suitable for installation in U-profiles UW 50 and UW75 and Geberit Duofix system rails
- Connection bend can be mounted without tools at different depths, adjustable range 45 mm
- Fastening for connection bend, sound-absorbing
- Concealed cistern with front actuation
- Concealed cistern, fully insulated against condensation
- Cistern fulfils standard requirements in accordance with EN 14055, Class II
- Immediate post flush possible with factory setting
- Tool-free installation and maintenance work on concealed cistern
- Water supply connection on the rear or top centre
- Protection cover box for service opening protects against moisture and dirt
- Protection box for service opening can be cut to length
- With conduit pipe for feed pipe for Geberit AquaClean shower toilets and for connection cable
- Fastening option for electrical connection
- Power & Connect Box mountable

TECHNICAL DATA

Flow pressure	0.1–10 bar
Operating temperature, water max.	25 °C
Flush volume, factory setting	5.8 / 3 l
Flush volume small, adjustment range	2–4 l
Height-adjustable	No

SCOPE OF DELIVERY

- Water supply connection R 1/2", compatible with MasterFix and MeplaFix, with integrated angle stop valve and hand wheel
- Protection box for service opening
- 2 wall anchors
- 2 fixing brackets
- Connection set for WC, ø 90 mm
- Connection bend 90° made of PE-HD, ø 90 mm
- Adaptor socket made of PE-HD, ø 90 / 110 mm
- 2 protection plugs
- 2 threaded rods M12
- Fastening material

ACCESSORIES

- Geberit Power & Connect box
- Geberit set of Power & Connect box and power supply unit for element for wall-hung WC
- Geberit set of support brackets for WC ceramic appliances with small contact surfaces
- EI 90 fire protection set for Geberit Duofix element for wall-hung WC
- Geberit Duofix set of wall anchors for single installation
- Geberit Duofix set of wall anchors for single and system installation
- Geberit Duofix fastening material for stud clearance 50–57.5 cm

- Geberit Duofix set of foot extensions for floor construction 20–40 cm
- Geberit concealed outlet for drywall and solid wall construction

Art. no.	B cm	H cm	T cm
111.383.00.3	50	112	12



ECONOMY SHOWER REGULATORS

Economy shower regulator suitable for accurate flow control to mains pressure feed systems only. Can be fitted in any 1/2" flat face connection, shower hose or flexible tap connectors. Come complete with integral gasket. Available in 6.0 litre, 8.0 litre, 10.0 litre or 12.0 litre flow rates

FL4 £4.40



AERATOR CONVERTER KITS

Aerator converter kit suitable for most screwed spout outlet connections replacing the current stream straightener. Available in 1.7 litre spray wash hand basin, 3.5 litre aerated column general basins or 5.0 litre aerated column

FL2 £9.00

4.3 Appendix C:

Product Specifications for fittings installed within the dwelling's second bedroom:

Technical Data Sheet

Product range: VOS

Product code: 28ROUND/WS/MB ,23ROUND/WS/BBR, 27ROUND/WS/BBL, 21ROUND/WS/BRZ

Finishes Available: Matt Black, Brushed Brass, Brushed Black, Bronze

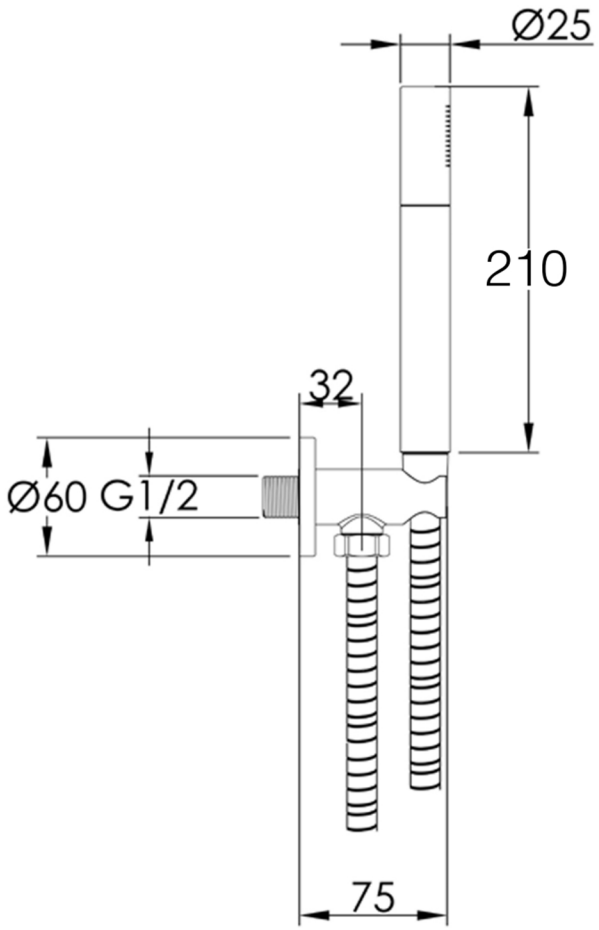

Min Pressure:
LP 0.2

Approvals:
WRAS

Connections:
G 1/2"

Warranty:
15 Years (5 on cartriges)

Flow Rate

0.2Bar: 4.8L/min

0.5Bar: 5.6L/min

1Bar: 7L/min

2Bar: 9.6L/min

3Bar: 12L/min

Technical Data Sheet

Product range: VOS

Product code: 28273MB, 23273BBR, 27273BBL, 21273BRZ
DH28273MB, DH23273BBR, DH27273BBL

Finishes Available: Matt Black, Brushed Brass, Brushed Black, Brushed Bronze

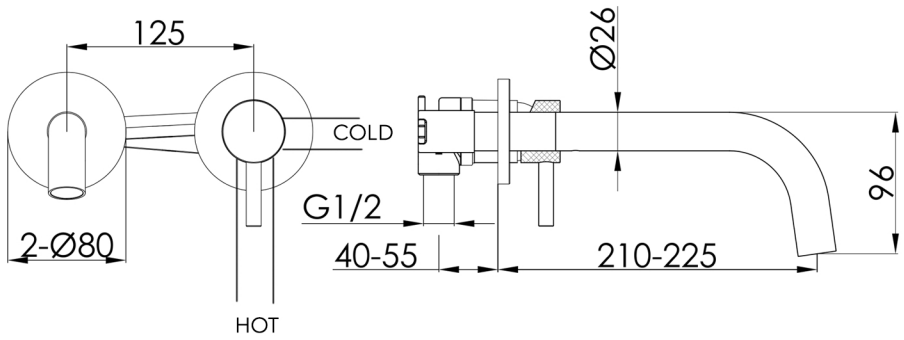

Min Pressure:
MP 0.5

Approvals:
WRAS

Connections:
G 1/2"

Warranty:
15 Years (5 on cartridges)

Flow Rate

0.2Bar: 4.9L/min

0.5Bar: 5.6L/min

1Bar: 7.3L/min

2Bar: 9.7L/min

3Bar: 12.2L/min



AERATOR CONVERTER KITS

Aerator converter kit suitable for most screwed spout outlet connections replacing the current stream straightener. Available in 1.7 litre spray wash hand basin, 3.5 litre aerated column general basins or 5.0 litre aerated column

FL2 £9.00



ECONOMY SHOWER REGULATORS

Economy shower regulator suitable for accurate flow control to mains pressure feed systems only. Can be fitted in any 1/2" flat face connection, shower hose or flexible tap connectors. Come complete with integral gasket. Available in 6.0 litre, 8.0 litre, 10.0 litre or 12.0 litre flow rates

FL4 £4.40

A06E

Flush valve Ecology for pre-wall installation systems



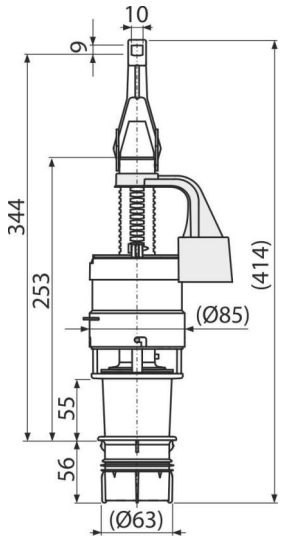

Application

For pre-wall installation systems with height of 1000, 1120, 1200 mm
For water-saving flushing 2/4 l

Features

- STOP button to adjust the amount of discharged water
- Dual flush
- Compatible with pre-wall installation systems A100, A101, A102, A115, A116, AM100, AM101, AM102, AM115, AM116 with height of 1000, 1120, 1200 mm
- Material: ABS

Scope of supply

- Valve
- Outlet DN60 mm for installation in the cistern

Order number, Logistic information

Code	EAN	Weight (piece | packing | palett)	Dimensions (piece | packing)	Quantity (packing | palett)
A06E	8595580511258	0,31 | 7,64 | 142,2 kg	440×140×100 | 590×430×390 mm	25 | 400 pcs

Warranty

2/3 years *

Norms

EN 14055

Technical specifications

- Functional requirements class I
- Small flush 2-4 l
- Factory setting of small flush 2 l
- Factory setting of large flush 4 l
- Big flush 3,5-6 l

* For more information about warranty visit https://www.alcadrain.com/warranty.

© 2024 Alcadrain s.r.o | Changes in dimensions and design reserved. | www.alcadrain.com

AM101/1000-0005 WRAS

Pre-wall installation system for dry build up (plasterboard)



Application

For mounting in front of a support wall or in to a plasterboard construction
For installation of wall-hung WC pans with a connecting pitch of 180 mm or 230 mm
For floor thickness 0–200 mm
For wall-hung WC

Features

- Dual flush independently adjustable with hygienic reserve
- Compatible with all ALCA flush plates
- The construction of polystyrene insulation prevents condensation forming on the surface of the tank and dampens the vibrations from the tank into the building structure
- The frame allows the anchoring to a separate sufficiently strong plasterboard partition, in front of the bearing wall
- The service opening cover simplifies assembly and prevents the penetration of moisture and impurities
- Frame material: powder-coated metal
- Installation depth adjustable from 20–95 mm
- Suitable for installation of remote or sensor flushing
- Possibility of tilting the cistern for easy installation in wooden construction buildings or mobile cells
- The cistern is made of one piece, thus ensuring 100% impermeability
- The installed module is covered with a plasterboard panel and there is no need for any additional fixing or anchoring elements
- Adjustable anchor feet and a spring-lock system, with a range of 0–200 mm
- Dispenser for WC cistern tablets included
- Sliding rail holder for the waste connector can be set to eight positions between 0–93 mm
- Prepared for connecting a bracket with a DG 1/2" conversion for bidet seats and sprays
- Water supply from the rear/top
- Angle valve with the ability to connect to the Mepla piping system
- Maintenance work without using any tools
- Installation depth 125 mm
- Wall Hung Toilet Frame and Concealed Cistern AM101 certified according to WRAS standard (certificate no. 2206330)
- Cistern hinges made of two-component material insulate the transmission of vibrations from buildings

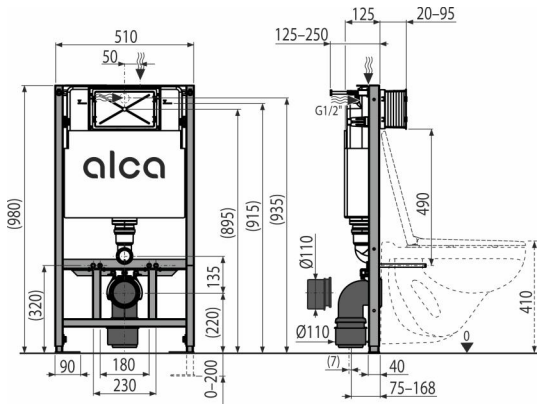

Scope of supply

- Fixation material for fixing the WC pan: threaded rod M12 – 2 pcs, washers – 4 pcs , cover – 2 pcs, nut – 2 pcs, thread protector – 2 pcs
- Fixation set: screw Ø8×60 – 4 pcs, dowel Ø12 – 4 pcs
- Elbow waste connector HT 90/90 polyethylene, PE-HD
- The 2 piece cover of the service opening is simply adjustable
- Cistern with fill and flush valve
- Waste reduction HT 90/110 polyethylene, PE-HD
- End-caps set for protecting the connecting holes during installation of the system
- Set for inserting toilet tablets
- Self-supporting frame
- Fittings 1/2" water connection with the integrated angle valve Schell 1/2–3/8"
- Drainage seal, PP connector, connector seal
- Inlet seal, PP outlet, wrapping seal

Order number, Logistic information

Code	EAN	Weight (piece | packing | palett)	Dimensions (piece | packing)	Quantity (packing | palett)
AM101/1000-0005	8595580581664	13,70 | 13,70 | 294,5 kg	1130×145×520 | 1130×520×145 mm	1 | 20 pcs

Warranty

2/15 years *

Norms

EN 14124, EN 14055

Technical specifications

- Recommended range of water pressure 0,3-0,5 MPa
- Functional range of water pressure 0,05-1,0 MPa
- Hygienic reserve 3 l
- Small flush 2,5-3,5 l
- Water volume in the cistern 9 l
- Water connection from the back or top via mounting holes G1/2 "
- Factory setting of small flush 3 l
- Factory setting of large flush 6 l
- Big flush 6-9 l
- Load test 400 kg

* For more information about warranty visit https://www.alcadrain.com/warranty.

© 2024 Alcadrain s.r.o | Changes in dimensions and design reserved. | www.alcadrain.com

4.4 Appendix D:

Product Specifications for fittings installed within the dwelling's third bedroom:

Datasheet

PCW-01 1/2“ Washer Regulators
Metric Flow Rates

PCW-01 1/2“ washer regulators are flow regulators with an added sealing function. These water savers are easy to install and fit in any ½“ connection, making them the perfect retrofit solution for existing shower handles, shattafs or wall/ceiling-mounted shower heads.

The PCW-01 washer regulator must be tightened with a torque of 2 Nm max. Observe the direction of flow.

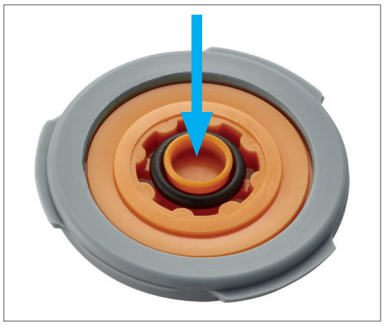

PCW-01 1/2“ washer regulator

Materials used

Housing:	POM
O-ring:	EPDM
PCW washer:	silicone

Model Overview

PCW-01 Washer Regulators

Model / Flow rate	Color Code	Part no. PCW-01	Flow tolerance (in %)	Pressure range (in bar)
PCW-01 1/2“ 2.0 l/min.	olive	58.8632.100	+30 / -30	1.0 - 10.0
PCW-01 1/2“ 3.0 l/min.	brown	58.8633.100	+30 / -30	1.0 - 10.0
PCW-01 1/2“ 4.0 l/min.	dark grey	58.8634.100	+20 / -20	1.0 - 10.0
PCW-01 1/2“ 5.0 l/min.	yellow	58.8635.100	+20 / -20	1.0 - 10.0
PCW-01 1/2“ 6.0 l/min.	black	58.8636.100	+10 / -10	1.0 - 10.0
PCW-01 1/2“ 7.0 l/min.	light green	58.8637.100	+10 / -10	1.0 - 10.0
PCW-01 1/2“ 8.0 l/min.	natural white	58.8638.100	+10 / -10	1.0 - 10.0
PCW-01 1/2“ 9.0 l/min.	orange	58.8639.100	+10 / -10	1.5 - 10.0
PCW-01 1/2“ 10.0 l/min.	light blue	58.8640.100	+10 / -10	1.5 - 10.0
PCW-01 1/2“ 11.0 l/min.	brown	58.8641.100	+10 / -10	1.0 - 10.0
PCW-01 1/2“ 12.0 l/min.	red	58.8642.100	+10 / -10	1.5 - 10.0
PCW-01 1/2“ 15.0 l/min.	lime green	58.8650.100	+10 / -10	3.0 - 10.0

Flow Curves

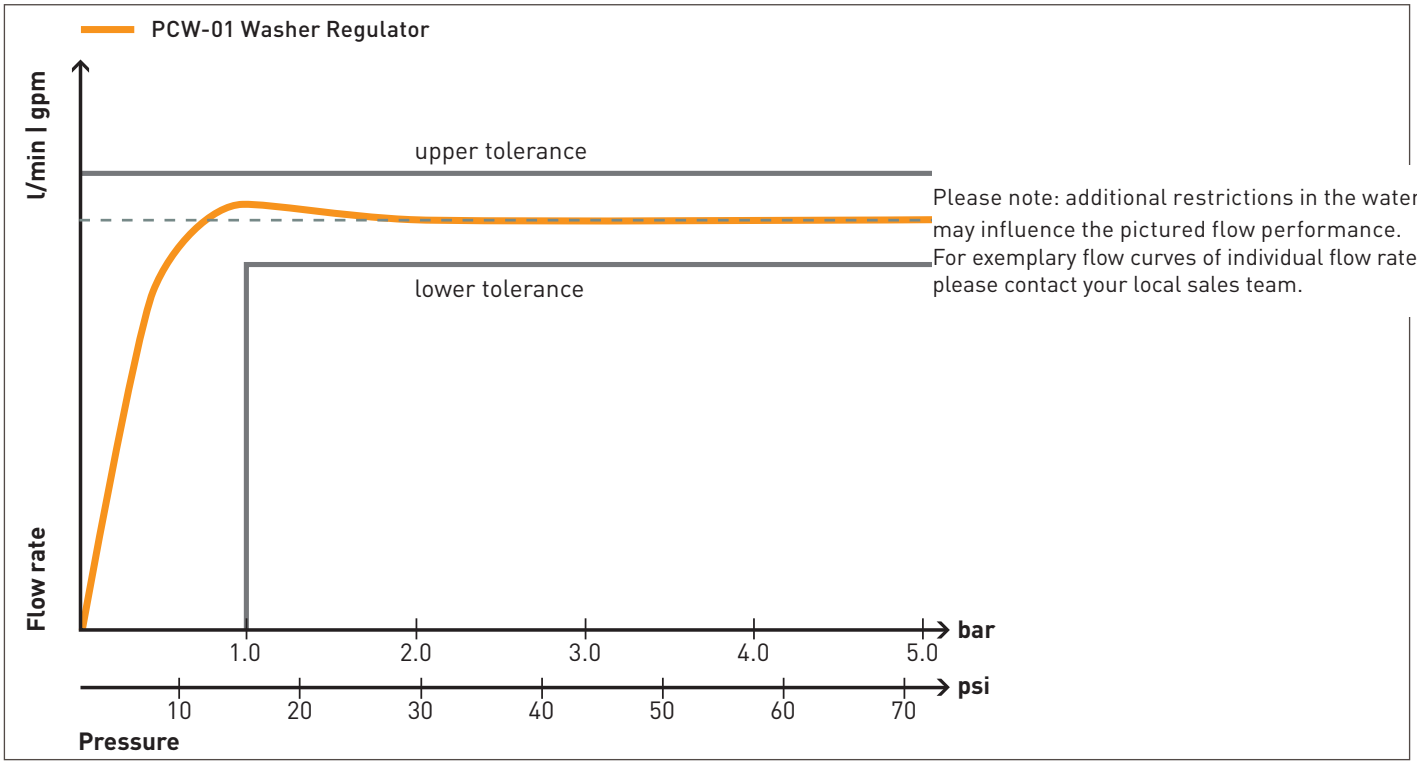

Please note: additional restrictions in the waterway may influence the pictured flow performance. For exemplary flow curves of individual flow rates, please contact your local sales team.

Datasheet

PCW-01 1/2“ Washer Regulators
Metric Flow Rates

Dimensions (in mm)

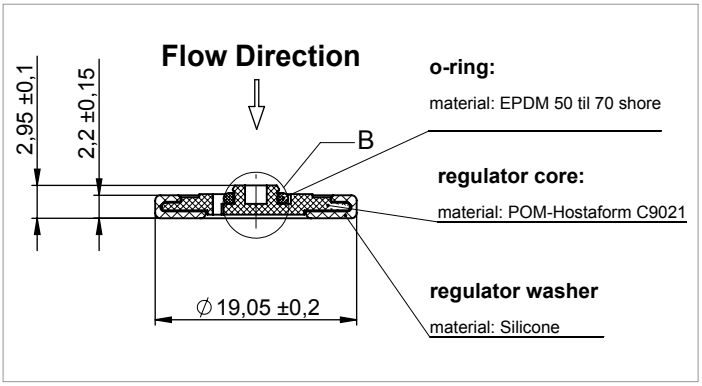

PCW-01 1/2“ washer regulator

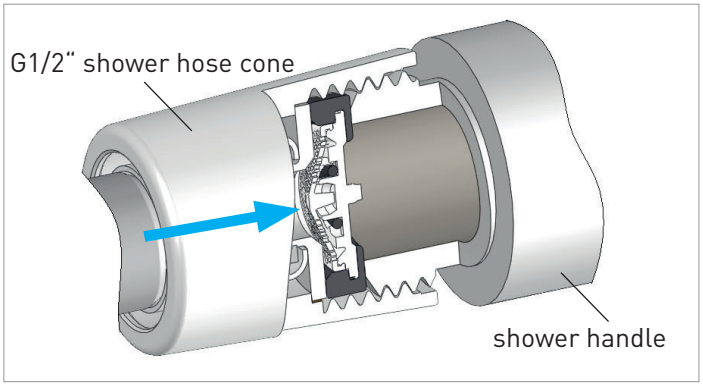

Recommended mounting position for shower handles

Intended Use


Drinking water only

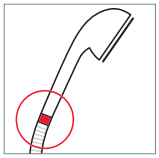
Shower handles

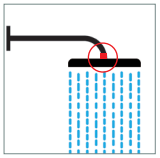
Shower heads

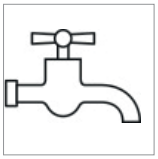
Bib taps/ wall spouts

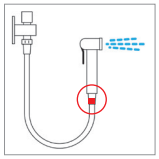
Shattafs/ bidet showers

Assembly Instructions

ATTENTION!
Product may not be altered!
May not be used for hot water application exceeding 70°C

ATTENTION!
Max. mounting torque 2.0 Nm

Operating Conditions

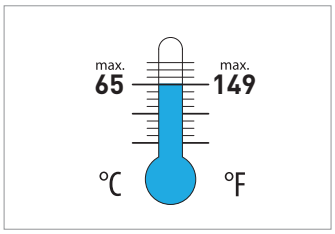

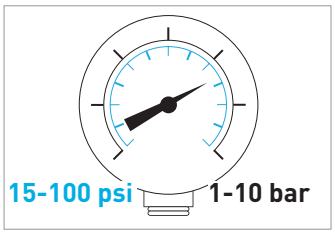

Indicated pressure values refer to supply line pressure.
Avoid water hammer.

Patents granted

Trademarks are registered in various countries



ECONOMY SHOWER REGULATORS

Economy shower regulator suitable for accurate flow control to mains pressure feed systems only. Can be fitted in any 1/2" flat face connection, shower hose or flexible tap connectors. Come complete with integral gasket. Available in 6.0 litre, 8.0 litre, 10.0 litre or 12.0 litre flow rates

FL4 £4.40



AERATOR CONVERTER KITS

Aerator converter kit suitable for most screwed spout outlet connections replacing the current stream straightener. Available in 1.7 litre spray wash hand basin, 3.5 litre aerated column general basins or 5.0 litre aerated column

FL2 £9.00

At a glance

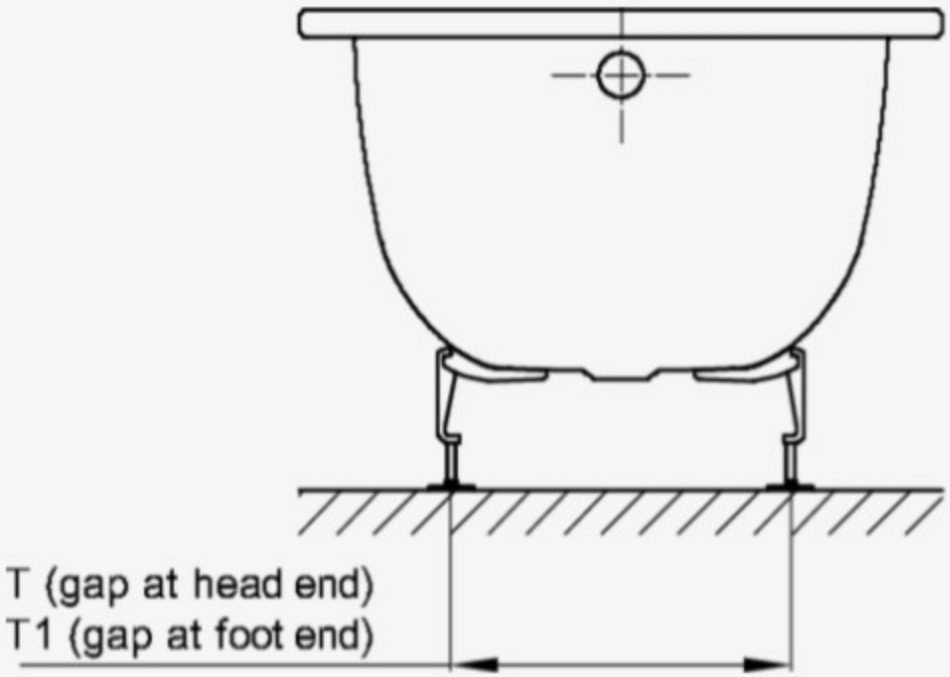

Dimensions:	1700 x 700 x 420 / 1265 mm
Weight:	44,9 kg
Capacity*:	118 l
Rim height:	30 mm
Corner radius:	10 mm
Waste diameter:	52 mm
Lying Dimension:	1265 mm
Technical advice:	For professional installation we recommend the use of the original bath feet B23-1500. This bath is suitable for undermount installation after on-site inspection and proper installation. We can provide you with the relevant cut-out data on request. The BetteForm, 1900 × 800 × 420 mm, article no. 2951, is not available with BetteUpstand or in special size.

*Useful capacity: water capacity minus 70 litres displacement

Technical Data Sheet

Product range: VOS

Product code: 28ROUND/WS/MB ,23ROUND/WS/BBR, 27ROUND/WS/BBL, 21ROUND/WS/BRZ

Finishes Available: Matt Black, Brushed Brass, Brushed Black, Bronze

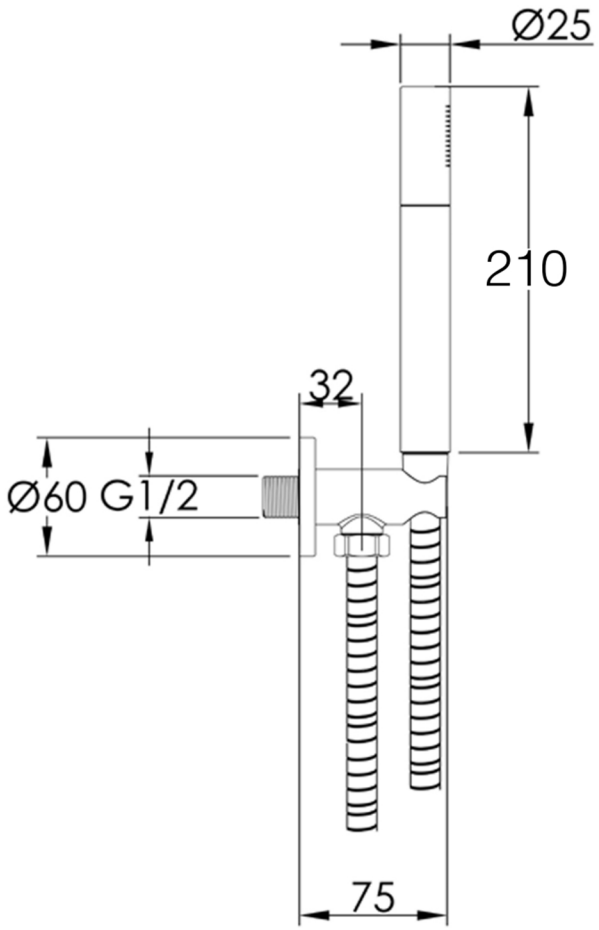

Min Pressure:
LP 0.2

Approvals:
WRAS

Connections:
G 1/2"

Warranty:
15 Years (5 on cartriges)

Flow Rate

0.2Bar: 4.8L/min

0.5Bar: 5.6L/min

1Bar: 7L/min

2Bar: 9.6L/min

3Bar: 12L/min

4.5 Appendix E:

Product Specifications for fittings installed within the dwelling's fourth bedroom:

Technical Data Sheet

Product range: VOS

Product code: 28273MBSP, 23273BBRSP, 27273BBLSP
DH28273MBSP, DH23273BBRSP, DH27273BBLSP

Finishes Available: Matt Black, Brushed Brass, Brushed Black

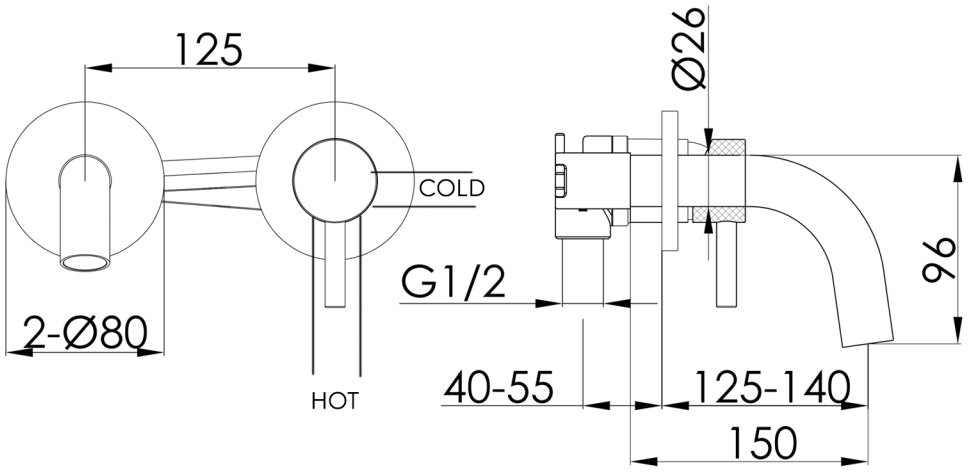

Min Pressure:
MP 0.5

Approvals:
WRAS

Connections:
G 1/2"

Warranty:
15 Years (5 on cartriges)

Flow Rate

0.2Bar: 4.9L/min

0.5Bar: 5.6L/min

1Bar: 7.3L/min

2Bar: 9.7L/min

3Bar: 12.2L/min

Technical Data Sheet

Product range: VOS

Product code: 28ROUND/WS/MB ,23ROUND/WS/BBR, 27ROUND/WS/BBL, 21ROUND/WS/BRZ

Finishes Available: Matt Black, Brushed Brass, Brushed Black, Bronze

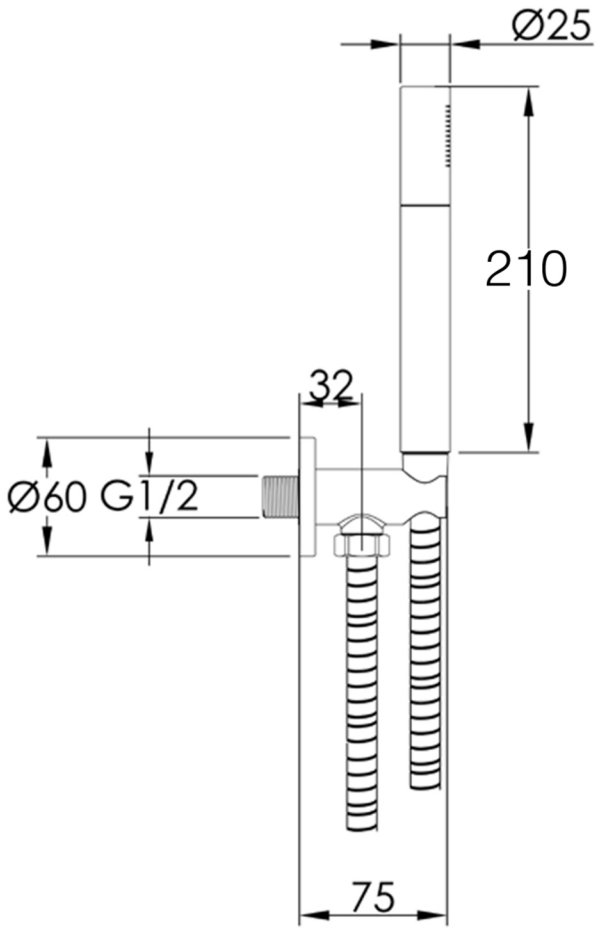

Min Pressure:
LP 0.2

Approvals:
WRAS

Connections:
G 1/2"

Warranty:
15 Years (5 on cartriges)

Flow Rate

0.2Bar: 4.8L/min

0.5Bar: 5.6L/min

1Bar: 7L/min

2Bar: 9.6L/min

3Bar: 12L/min



AERATOR CONVERTER KITS

Aerator converter kit suitable for most screwed spout outlet connections replacing the current stream straightener. Available in 1.7 litre spray wash hand basin, 3.5 litre aerated column general basins or 5.0 litre aerated column

FL2 £9.00

Technical Data Sheet

Product range: VOS

Product code: 28200MB

Finishes Available: Matt Black

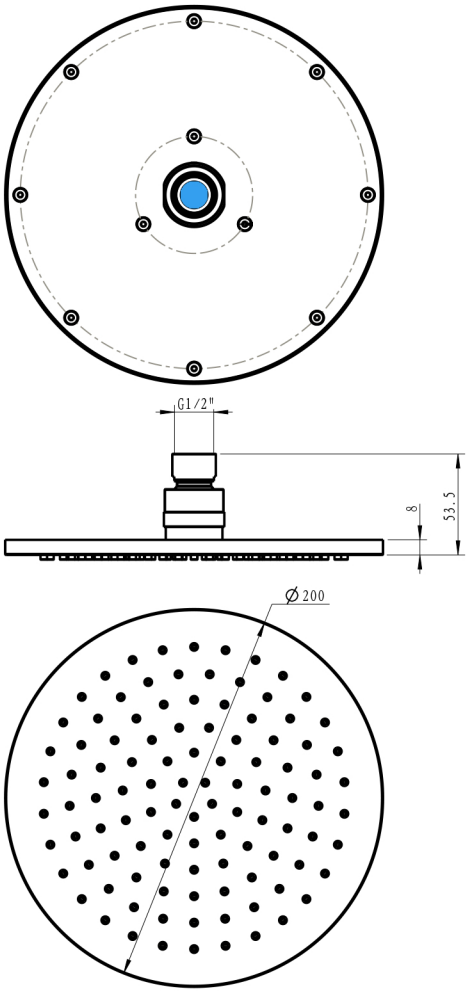

Min Pressure:
MP 0.5

Approvals:
WRAS

Connections:
G 1/2"

Warranty:
15 Years

Flow Rate

1Bar: 10.3L/min

2Bar: 17L/min

3Bar: 27.3L/min



ECONOMY SHOWER REGULATORS

Economy shower regulator suitable for accurate flow control to mains pressure feed systems only. Can be fitted in any 1/2" flat face connection, shower hose or flexible tap connectors. Come complete with integral gasket. Available in 6.0 litre, 8.0 litre, 10.0 litre or 12.0 litre flow rates

FL4 £4.40

AM101/1000-0005 WRAS

Pre-wall installation system for dry build up (plasterboard)



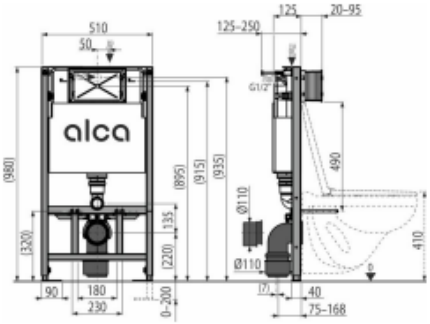

Application

For mounting in front of a support wall or in to a plasterboard construction
For installation of wall-hung WC pans with a connecting pitch of 180 mm or 230 mm
For floor thickness 0–200 mm
For wall-hung WC

Features

- Dual flush independently adjustable with hygienic reserve
- Compatible with all ALCA flush plates
- The construction of polystyrene insulation prevents condensation forming on the surface of the tank and dampens the vibrations from the tank into the building structure
- The frame allows the anchoring to a separate sufficiently strong plasterboard partition, in front of the bearing wall
- The service opening cover simplifies assembly and prevents the penetration of moisture and impurities
- Frame material: powder-coated metal
- Installation depth adjustable from 20–95 mm
- Suitable for installation of remote or sensor flushing
- Possibility of tilting the cistern for easy installation in wooden construction buildings or mobile cells
- The cistern is made of one piece, thus ensuring 100% impermeability
- The installed module is covered with a plasterboard panel and there is no need for any additional fixing or anchoring elements
- Adjustable anchor feet and a spring-lock system, with a range of 0–200 mm
- Dispenser for WC cistern tablets included
- Sliding rail holder for the waste connector can be set to eight positions between 0–93 mm
- Prepared for connecting a bracket with a DG 1/2" conversion for bidet seats and sprays
- Water supply from the rear/top
- Angle valve with the ability to connect to the Mepla piping system
- Maintenance work without using any tools
- Installation depth 125 mm
- Wall Hung Toilet Frame and Concealed Cistern AM101 certified according to WRAS standard (certificate no. 2206330)
- Cistern hinges made of two-component material insulate the transmission of vibrations from buildings

Scope of supply

- Fixation material for fixing the WC pan: threaded rod M12 – 2 pcs, washers – 4 pcs , cover – 2 pcs, nut – 2 pcs, thread protector – 2 pcs
- Fixation set: screw Ø8×60 – 4 pcs, dowel Ø12 – 4 pcs
- Elbow waste connector HT 90/90 polyethylene, PE-HD
- The 2 piece cover of the service opening is simply adjustable
- Cistern with fill and flush valve
- Waste reduction HT 90/110 polyethylene, PE-HD
- End-caps set for protecting the connecting holes during installation of the system
- Set for inserting toilet tablets
- Self-supporting frame
- Fittings 1/2" water connection with the integrated angle valve Schell 1/2–3/8"
- Drainage seal, PP connector, connector seal
- Inlet seal, PP outlet, wrapping seal

Order number, Logistic information

Code	EAN	Weight (piece | packing | palett)	Dimensions (piece | packing)	Quantity (packing | palett)
AM101/1000-0005	8595580581664	13,70 | 13,70 | 294,5 kg	1130×145×520 | 1130×520×145 mm	1 | 20 pcs

Warranty
2/15 years *

Norms
EN 14124, EN 14055

Technical specifications

- Recommended range of water pressure 0,3-0,5 MPa
- Functional range of water pressure 0,05-1,0 MPa
- Hygienic reserve 3 l
- Small flush 2,5-3,5 l
- Water volume in the cistern 9 l
- Water connection from the back or top via mounting holes G1/2"
- Factory setting of small flush 3 l
- Factory setting of large flush 6 l
- Big flush 6-9 l
- Load test 400 kg

* For more information about warranty visit https://www.alcadrain.com/warranty.

© 2025 Alcadrain s.r.o | Changes in dimensions and design reserved. | www.alcadrain.com

4.6 Appendix F:

Product Specifications for fittings installed within the dwelling's cloakroom:

DO 1007
WALL MOUNTED 2 HOLE BASIN MIXER

FLOW RATES

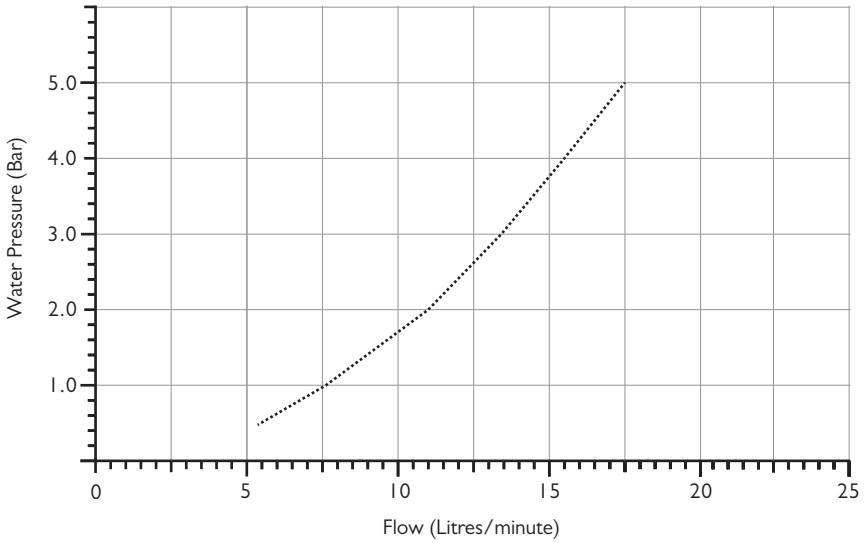

TYPICAL FLOW RATES

Flow rates shown are free flowing and may vary subject to restrictions created by installation, pipework layout or application.

Water Pressure (Bar)	Outlet (Litres/minute)
0.5	5.5
1.0	7.6
2.0	10.9
3.0	13.3
4.0	15.5
5.0	17.4

COALBROOK



AERATOR CONVERTER KITS

Aerator converter kit suitable for most screwed spout outlet connections replacing the current stream straightener. Available in 1.7 litre spray wash hand basin, 3.5 litre aerated column general basins or 5.0 litre aerated column

FL2 £9.00

Datasheet

PCW-01 1/2“ Washer Regulators
Metric Flow Rates

PCW-01 1/2“ washer regulators are flow regulators with an added sealing function. These water savers are easy to install and fit in any ½“ connection, making them the perfect retrofit solution for existing shower handles, shattafs or wall/ceiling-mounted shower heads.

The PCW-01 washer regulator must be tightened with a torque of 2 Nm max. Observe the direction of flow.

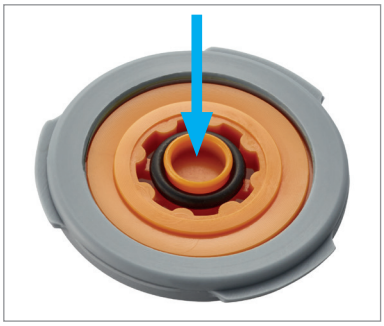

PCW-01 1/2“ washer regulator

Materials used

Housing:	POM
O-ring:	EPDM
PCW washer:	silicone

Model Overview

PCW-01 Washer Regulators

Model / Flow rate	Color Code	Part no. PCW-01	Flow tolerance (in %)	Pressure range (in bar)
PCW-01 1/2“ 2.0 l/min.	olive	58.8632.100	+30 / -30	1.0 - 10.0
PCW-01 1/2“ 3.0 l/min.	brown	58.8633.100	+30 / -30	1.0 - 10.0
PCW-01 1/2“ 4.0 l/min.	dark grey	58.8634.100	+20 / -20	1.0 - 10.0
PCW-01 1/2“ 5.0 l/min.	yellow	58.8635.100	+20 / -20	1.0 - 10.0
PCW-01 1/2“ 6.0 l/min.	black	58.8636.100	+10 / -10	1.0 - 10.0
PCW-01 1/2“ 7.0 l/min.	light green	58.8637.100	+10 / -10	1.0 - 10.0
PCW-01 1/2“ 8.0 l/min.	natural white	58.8638.100	+10 / -10	1.0 - 10.0
PCW-01 1/2“ 9.0 l/min.	orange	58.8639.100	+10 / -10	1.5 - 10.0
PCW-01 1/2“ 10.0 l/min.	light blue	58.8640.100	+10 / -10	1.5 - 10.0
PCW-01 1/2“ 11.0 l/min.	brown	58.8641.100	+10 / -10	1.0 - 10.0
PCW-01 1/2“ 12.0 l/min.	red	58.8642.100	+10 / -10	1.5 - 10.0
PCW-01 1/2“ 15.0 l/min.	lime green	58.8650.100	+10 / -10	3.0 - 10.0

Flow Curves

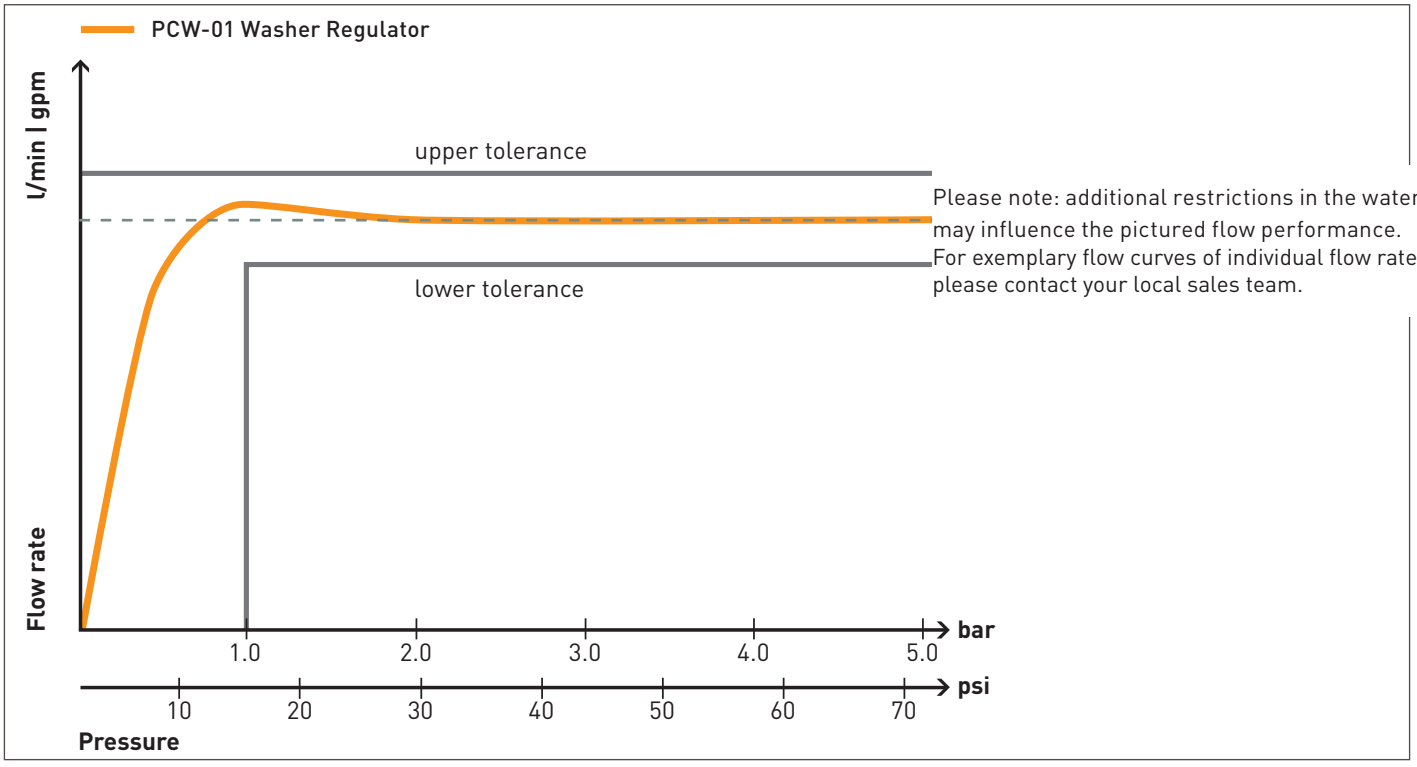

Please note: additional restrictions in the waterway may influence the pictured flow performance. For exemplary flow curves of individual flow rates, please contact your local sales team.

Datasheet

PCW-01 1/2“ Washer Regulators
Metric Flow Rates

Dimensions (in mm)

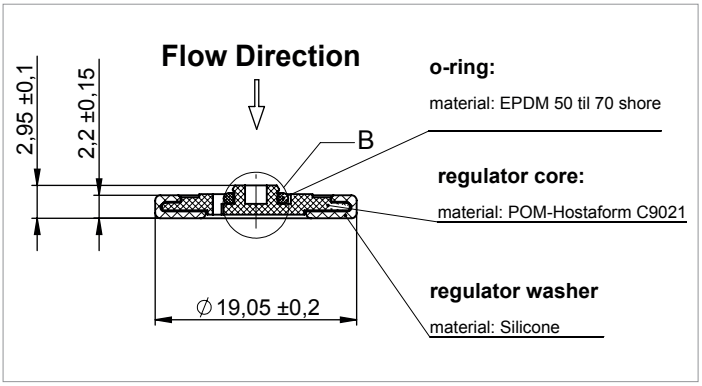

PCW-01 1/2“ washer regulator

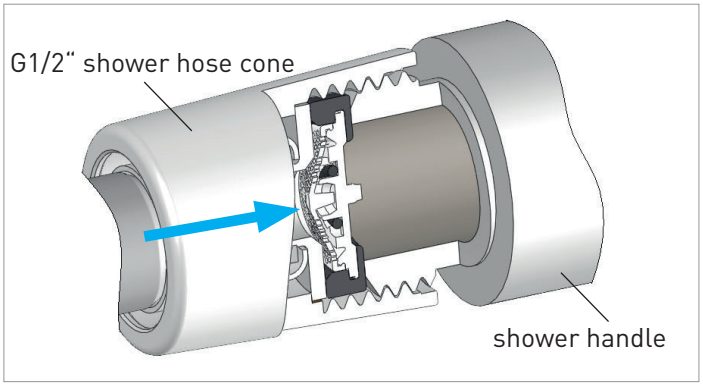

Recommended mounting position for shower handles

Intended Use


Drinking water only

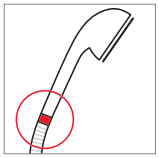
Shower handles

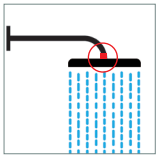
Shower heads

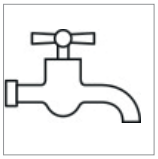
Bib taps/ wall spouts

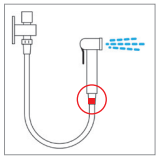
Shattafs/ bidet showers

Assembly Instructions

ATTENTION!
Product may not be altered!
May not be used for hot water application exceeding 70°C

ATTENTION!
Max. mounting torque 2.0 Nm

Operating Conditions

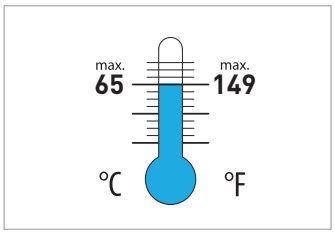

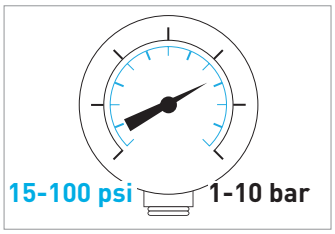

Indicated pressure values refer to supply line pressure.
Avoid water hammer.

Patents granted

Trademarks are registered in various countries

AM101/1000-0005 WRAS

Pre-wall installation system for dry build up (plasterboard)



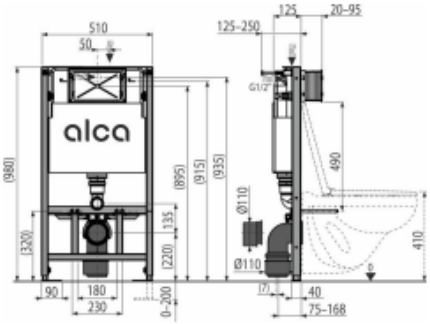

Application

For mounting in front of a support wall or in to a plasterboard construction
For installation of wall-hung WC pans with a connecting pitch of 180 mm or 230 mm
For floor thickness 0–200 mm
For wall-hung WC

Features

- Dual flush independently adjustable with hygienic reserve
- Compatible with all ALCA flush plates
- The construction of polystyrene insulation prevents condensation forming on the surface of the tank and dampens the vibrations from the tank into the building structure
- The frame allows the anchoring to a separate sufficiently strong plasterboard partition, in front of the bearing wall
- The service opening cover simplifies assembly and prevents the penetration of moisture and impurities
- Frame material: powder-coated metal
- Installation depth adjustable from 20–95 mm
- Suitable for installation of remote or sensor flushing
- Possibility of tilting the cistern for easy installation in wooden construction buildings or mobile cells
- The cistern is made of one piece, thus ensuring 100% impermeability
- The installed module is covered with a plasterboard panel and there is no need for any additional fixing or anchoring elements
- Adjustable anchor feet and a spring-lock system, with a range of 0–200 mm
- Dispenser for WC cistern tablets included
- Sliding rail holder for the waste connector can be set to eight positions between 0–93 mm
- Prepared for connecting a bracket with a DG 1/2" conversion for bidet seats and sprays
- Water supply from the rear/top
- Angle valve with the ability to connect to the Mepla piping system
- Maintenance work without using any tools
- Installation depth 125 mm
- Wall Hung Toilet Frame and Concealed Cistern AM101 certified according to WRAS standard (certificate no. 2206330)
- Cistern hinges made of two-component material insulate the transmission of vibrations from buildings

Scope of supply

- Fixation material for fixing the WC pan: threaded rod M12 – 2 pcs, washers – 4 pcs , cover – 2 pcs, nut – 2 pcs, thread protector – 2 pcs
- Fixation set: screw Ø8×60 – 4 pcs, dowel Ø12 – 4 pcs
- Elbow waste connector HT 90/90 polyethylene, PE-HD
- The 2 piece cover of the service opening is simply adjustable
- Cistern with fill and flush valve
- Waste reduction HT 90/110 polyethylene, PE-HD
- End-caps set for protecting the connecting holes during installation of the system
- Set for inserting toilet tablets
- Self-supporting frame
- Fittings 1/2" water connection with the integrated angle valve Schell 1/2–3/8"
- Drainage seal, PP connector, connector seal
- Inlet seal, PP outlet, wrapping seal

Order number, Logistic information

Code	EAN	Weight (piece | packing | palett)	Dimensions (piece | packing)	Quantity (packing | palett)
AM101/1000-0005	8595580581664	13,70 | 13,70 | 294,5 kg	1130×145×520 | 1130×520×145 mm	1 | 20 pcs

Warranty
2/15 years *

Norms
EN 14124, EN 14055

Technical specifications

- Recommended range of water pressure 0,3-0,5 MPa
- Functional range of water pressure 0,05-1,0 MPa
- Hygienic reserve 3 l
- Small flush 2,5-3,5 l
- Water volume in the cistern 9 l
- Water connection from the back or top via mounting holes G1/2"
- Factory setting of small flush 3 l
- Factory setting of large flush 6 l
- Big flush 6-9 l
- Load test 400 kg

* For more information about warranty visit https://www.alcadrain.com/warranty.

© 2025 Alcadrain s.r.o | Changes in dimensions and design reserved. | www.alcadrain.com

A06E

Flush valve Ecology for pre-wall installation systems



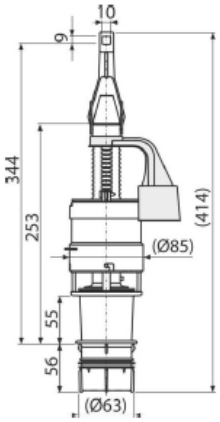

Application

For pre-wall installation systems with height of 1000, 1120, 1200 mm
For water-saving flushing 2/4 l

Features

- STOP button to adjust the amount of discharged water
- Dual flush
- Compatible with pre-wall installation systems A100, A101, A102, A115, A116, AM100, AM101, AM102, AM115, AM116 with height of 1000, 1120, 1200 mm
- Material: ABS

Scope of supply

- Valve
- Outlet DN60 mm for installation in the cistern

Order number, Logistic information

Code	EAN	Weight (piece | packing | palett)	Dimensions (piece | packing)	Quantity (packing | palett)
A06E	8595580511258	0,31 | 7,64 | 142,2 kg	440×140×100 | 590×430×390 mm	25 | 400 pcs

Warranty

2/3 years *

Norms

EN 14055

Technical specifications

- Functional requirements class I
- Small flush 2-4 l
- Factory setting of small flush 2 l
- Factory setting of large flush 4 l
- Big flush 3,5-6 l

4.7 Appendix G:

Product Specifications for fittings installed within the dwelling's Kitchen and Utility Room:

SIEMENS

iQ300, Fully-integrated dishwasher, 60 cm, varioHinge SN73HX42VG







Excellent wifi-enabled varioHinge dishwasher with program status projection on the floor, operable using a smartphone or voice assistant device.

- ✓ Control your smart dishwasher, no matter where you are.
- ✓ Optimal installation in your kitchen – varioHinge.
- ✓ varioSpeed Plus – Wash and dry your dishes up to three times faster.
- ✓ More flexibility for more convenient loading with the varioFlex rack & varioDrawer.
- ✓ infoLight shines with a blue light on the kitchen floor when running but goes out when the washing and drying cycle is over.

SZ30BI02	decorative strips stainless steel 81,5cm
SZ38BI00	Connection rail for divided furniture
SZ72010	inlet and outlet hose extention 2 m
SZ73000	Dishwashing aid set
SZ73050GB	Mains Kabel with GB-Plug
SZ73100	cutlery basket
SZ73300	Wineglass-Tray
SZ73640	Rack insert for stemware dishwasher

Energy Efficiency Class:	E
Energy Consumption for 100 cycles Eco Programme:	94 kWh
Maximum number of place settings:	13
The water consumption of the eco programme in liters per cycle:	9.5 l
Programme duration:	3:45 h
Airborne acoustical noise emissions :	46 dB(A) re 1pW
Airborne acoustical noise emission class:	C
Built-in / Free-standing:	Built-in
Height of removable worktop:	0 mm
Dimensions of the product:	815 x 598 x 550 mm
Required niche size for installation (HxWxD):	815-875 x 600 x 550 mm
Depth with open door 90 degree:	1150 mm
Adjustable feet:	Yes - all from front
Maximum adjustability feet:	60 mm
Adjustable plinth:	Both horizontal and vertical
Weight:	36.9 kg
Gross weight:	39.0 kg
Connection Rating:	2400 W
Fuse protection:	10 A
Nominal power:	220-240 V
Frequency:	50; 60 Hz
Length electrical supply cord:	175.0 cm
Plug type:	GB plug
Length inlet hose:	165 cm
Length outlet hose:	190 cm
EAN code:	4242003897683
Installation type:	Fully integrated

4 242003 897683

SIEMENS

iQ300, Fully-integrated dishwasher, 60 cm, varioHinge SN73HX42VG

- varioHinge 50mm

New for 2021

Performance

- Energy Efficiency Class[1]: E
- Energy[2] / Water[3]: 94 kWh / 9.5 litres
- Capacity: 13 place settings
- Programme duration[4]: 3:45 (h:min)
- Noise level: 46 dB(A) re 1 pW
- Noise Efficiency Class: C

Programmes/functions

- 6 programmes: Eco 50 °C, Auto 45-65 °C , Intensive 70 °C, Speed 65 °C , Speed 45 °C , Favourite
- Default favourite programme: Pre-Rinse
- 4 special options: Remote Start, intensiveZone, Half Load, Speed on Demand - varioSpeed Plus
- Machine care programme
- Silence on Demand (via app)

Flexible design elements

- varioFlex baskets
- varioDrawer - loading of cutlery on 3rd level
- 3 stage rackMatic height-adjustable top basket
- Low friction wheels on bottom basket
- Rack Stopper to prevent derailing of bottom basket
- 2 foldable plate racks in top basket
- 4 foldable plate racks in bottom basket
- Upper rack cup shelf

Innovations and technology

- Home Connect ready
- Heat exchanger.
- dosageAssist detergent dispenser
- iQDrive motor
- Automatic detergent-aware system
- hydroSensor
- Glass care protection system

Design features

- Controls on top edge of door
- infoLight (blue) - Light projection on the floor
- acoustic end of cycle indicator, internal remaining programme time indicator (minutes), water inlet indicator
- Time delay (3, 6 or 24 hours)
- aquaStop®: Siemens home appliances' warranty in case of water damage – throughout the lifetime of the appliance.*
- Self-cleaning filter system with 3 piece corrugated filter
- incl. Steam protection for worktop
- Stainless steel/polinox interior
- Dimensions (HxWxD): 81.5 x 59.8 x 55cm

* Please find warranty terms under https://www.siemens-home.bsh-group.com/uk/customer-service/warranty/additional-warranties

[1] Scale of Energy Efficiency Classes from A to G

[2] Energy consumption in kWh per 100 cycles (in programme Eco 50 °C)

[3] Water consumption in litres per cycle (in programme Eco 50 °C)

[4] Duration of programme Eco 50 °C

SIEMENS

iQ300, Fully-integrated dishwasher, 60 cm, varioHinge SN73HX42VG

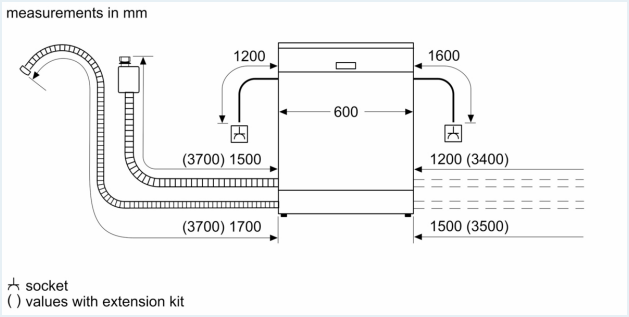

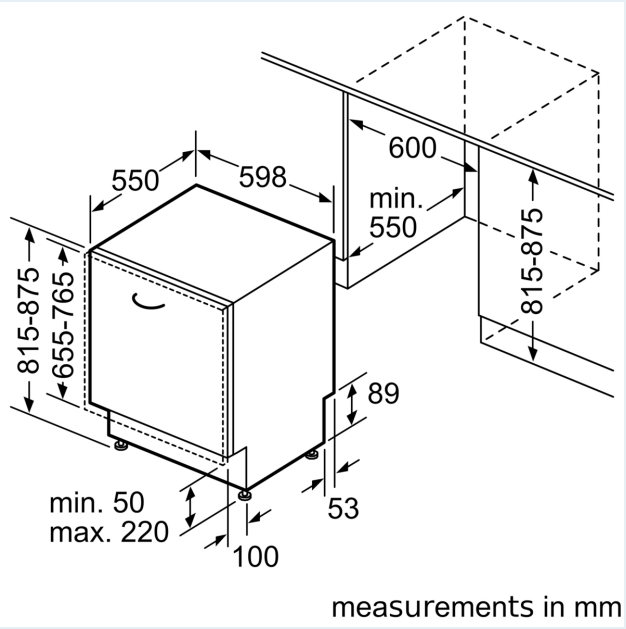

SIEMENS

iQ500, Washing machine, front loader, 9 kg, 1400 rpm
WG44G290GB





Outstanding laundry performance with speedPack L for fast washing and automatic stainRemoval to avoid manual pre-treatment.

- ✓ speedPack L: speed up your cycle, or wash clothes in just 15 minutes.
- ✓ stainRemoval system: removes four types of stubborn stain without pretreatment.
- ✓ Best Energy Efficiency label A - Our most energy-efficient washing machines.
- ✓ Large LED display: easily view your washer's functions. And control it with a simple touch.
- ✓ Outdoor – Gentle cleaning for water-repellent fabrics, seams and membranes.

WX975600	Floor securing component
WZ10131	Extension for cold water inlet /Aquastop
WZWP20W	Platform with pull-out, washer, cubic

Energy Efficiency Class: ..... A
Weighted energy consumption in kWh per 100 washing cycles of eco 40-60 programme: ..... 46 kWh
Maximum capacity in kg: ..... 9.0 kg
The water consumption of the eco programme in liters per cycle: 48 l
Duration of eco 40-60 programme in hours and mins at rated capacity: ..... 3:48 h
Spin-drying efficiency class of eco 40-60 programme: ..... B
Airborne acoustical noise emission class: ..... A
Airborne acoustical noise emissions : ..... 71 dB(A) re 1pW
Built-in / Free-standing: ..... Freestanding
Dimensions of the product: ..... 848x598x590 mm
Weight: ..... 73.5 kg
Connection Rating: ..... 2300 W
Fuse protection: ..... 10 A
Nominal power: ..... 220-240 V
Frequency: ..... 50-60 Hz
Length electrical supply cord: ..... 210.0 cm
Door opening: ..... Left
Wheels: ..... No
EAN code: 4242003900536
Installation type: ..... Freestanding

4 242003 900536

SIEMENS

iQ500, Washing machine, front loader, 9 kg, 1400 rpm
WG44G290GB

Performance
- Energy Efficiency Class[1]: A
- Energy[2] / Water[3]: 46 kWh / 48 litres
- Load capacity: 1 - 9 kg
- Programme duration[4]: 3:48 h:min
- Spin drying efficiency class: B
- Spin speed**: 400 - 1400 rpm
- Noise level: 71 dB (A) re 1 pW
- Noise efficiency class: A

Programmes/functions
- Touch control buttons: less ironing, Ready in, stain selection, start/pause with reload function, temperature selection, varioSpeed, prewash, spin speed selection, Water & Rinse Plus/Rinse Hold
- Standard programmes: cottons, easy care, delicates, wool hand wash
- Special programmes: drum clean with reminder, Dark Wash, shirts/blouses, Outdoor, drain / spin, mixed fabrics, single rinse, rapid 15 minute quick wash, Hygiene

Key features
- varioSpeed: Up to 65% reduced washing cycle ***
- autoStain removal system (ASR) - 4 stain removal options at the touch of a button
- Reload Function: Stop the washing machine to add any forgotten items of laundry to the drum.
- antiVibration Design - for more stability and quietness
- iQdrive with 10 year warranty

Additional features
- Large LED-Display for programme status indication, max. spin speed, remaining time and 24 h end time delay and load recommendation
- Drum volume: 65 litres
- Usage meter: counts completed programmes
- drum interior light
- waveDrum: for highly effective and extremely gentle laundry care
- drum clean with reminder function
- waterPerfect Plus: for efficient use of water even with small loads thanks to intelligent sensor technology.
- Detergent dispensing: easy clean
- Divider for Liquid Detergent
- autoStain removal system (ASR)
- Aqua Protection
- soft dial
- Foam detection system
- Out of balance load adjustment
- Electronic child safety package
- Acoustic signals: Buzzer

Technical Information
- Slide-under installation
- Large Liquid-chrome matt, black door with 165° opening
- Dimensions (H x W): 84.8 cm x 59.8 cm
- Appliance depth: 59.0 cm
- Appliance depth incl. door: 63.6 cm
- Appliance depth with open door: 107.3 cm

[1] Scale of Energy Efficiency Classes from A to G

[2] Energy consumption in kWh per 100 cycles (in programme Eco 40-60)

[3] Weighted water consumption in litres per cycle (in programme Eco 40-60)

[4] Duration of Eco 40-60 programme

** Values are rounded.

*** Comparison between the program duration of Easy-care 40°C and the program duration of Easy-care 40°C + activated varioSpeed option

SIEMENS

iQ500, Washing machine, front loader, 9 kg, 1400 rpm
WG44G290GB

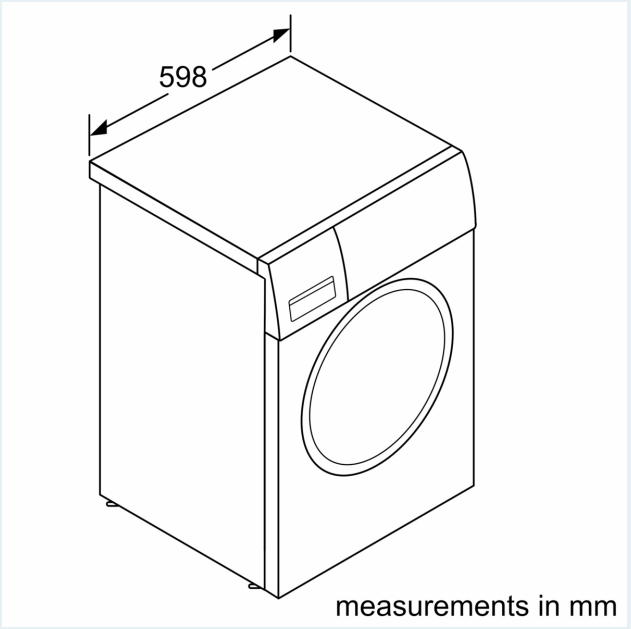

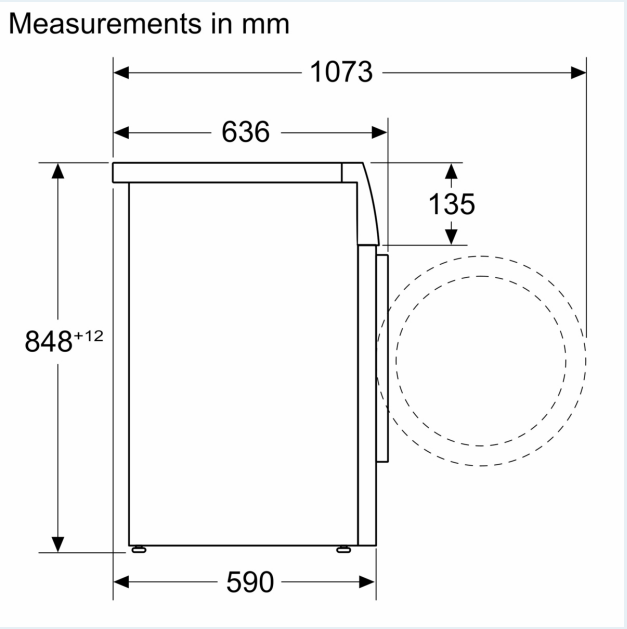

Technical specifications

Tank	PRO3	PRO7	COMBI
Voltage (V)	230	230	230
Wattage (W)*	1600	2900	2200
Capacity (litres)	3	7	7
Heating-up time (minutes)*	10	15	20
Stand-by power consumption (W)*	10	10	10
Tank height (cm)	40	47	47
Total height requirement (cm)	48	55	55
Tank diameter (cm)	15	20	20
Tap hole			
- boiling-water-tap (mm)	32	32	32
- mixer tap (mm)	35	35	35
- Fusion (mm)	35	35	35
- soap dispenser	25	25	25
Min. cold water pressure (bar)	2	2	2
Min. hot water pressure (bar)**	2	2	-
Recomm. pressure (bar)	2-4	2-4	2-4
Volume at 40°C (litres)*	-	-	27
Volume at 60°C (litres)*	-	-	15
Mounting bracket optional	yes	yes	yes
Safety feature	- maximum temperature fuse		
	- pressure relief valve 8/10 bar		
HiTAC® water filter	High Temperature Activated		
	Carbon		

*These are average values.

**Only applicable for Nordic Twintaps and Fusion

inta

FLOW REGULATION

WONDER VALVES

- Combined isolating ball valve and flow regulator
- WRAS approved
- Flow regulating options 3 - 18 litres per minute

controls flow and saves water



compression screwdriver operated wonder valves

code	connection	flow limiter
CP961XC15	15mm	none
CP961R03XC15	15mm	3 litre
CP961R04XC15	15mm	4 litre
CP961R06XC15	15mm	6 litre
CP961R08XC15	15mm	8 litre
CP961R10XC15	15mm	10 litre
CP961R12XC15	15mm	12 litre
CP961R15XC15	15mm	15 litre
CP961R18XC15	15mm	18 litre
CP961XC22	22mm	none
CP961R03XC22	22mm	3 litre
CP961R04XC22	22mm	4 litre
CP961R06XC22	22mm	6 litre
CP961R08XC22	22mm	8 litre
CP961R10XC22	22mm	10 litre
CP961R12XC22	22mm	12 litre
CP961R15XC22	22mm	15 litre
CP961R18XC22	22mm	18 litre



compression lever operated wonder valves

code	connection	flow limiter
CP961XLC15	15mm	none
CP961R03XLC15	15mm	3 litre
CP961R04XLC15	15mm	4 litre
CP961R06XLC15	15mm	6 litre
CP961R08XLC15	15mm	8 litre
CP961R10XLC15	15mm	10 litre
CP961R12XLC15	15mm	12 litre
CP961R15XLC15	15mm	15 litre
CP961R18XLC15	15mm	18 litre
CP961XLC22	22mm	none
CP961R03XLC22	22mm	3 litre
CP961R04XLC22	22mm	4 litre
CP961R06XLC22	22mm	6 litre
CP961R08XLC22	22mm	8 litre
CP961R10XLC22	22mm	10 litre
CP961R12XLC22	22mm	12 litre
CP961R15XLC22	22mm	15 litre
CP961R18XLC22	22mm	18 litre

waterwise AWARD WINNING WATER SAVER

QUALIFIED WATER TECHNOLOGY LIST

WRAS APPROVED PRODUCT

inta

FLOW REGULATION

WONDER VALVES

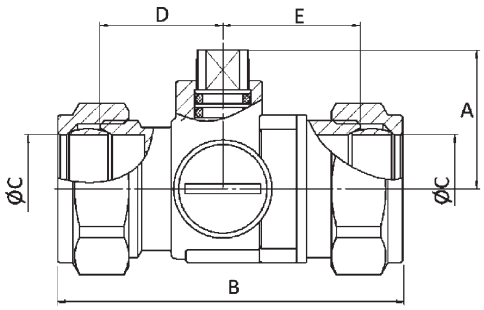

	15mm	22mm
A	27.3	27.3
B	67	71
Ø C	15	22
D	23.6	23.5
E	27.4	27.4

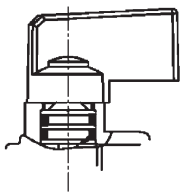

Pressure rating	PN16
Operating temperature	0°C - 85°C

Body	Nickel plated DZR brass (CW602N)
End cap	Nickel plated DZR brass (CW602N)
Ball	Hard chrome plated DZR brass (CW602N)
Stem	Nickel plated DZR brass (CW602N)
Access port cap	Nickel plated DZR brass (CW602N)
Compression nuts	Nickel plated DZR brass (CW602N)
Olives	Brass
Seats	PTFE
Seals	EPDM

AIRFIELD INDUSTRIAL ESTATE, HIXON, STAFFORD, ST18 0PF
T. 01889 272180 F. 01889 272181 E. SALES@INTATEC.CO.UK
WWW.INTATEC.CO.UK

E&OE
08/2012