Our Ref: 7554_RH20_Pulborough_07

Date: 14TH July 2025

RE: (DC/24/0256) Parsons Field Stables Pickhurst Lane Pulborough West Sussex, RH20 1DA

This letter has been prepared in response to Lead Local Flood Authority comments dated 09.04.2025 with regards to the proposed drainage arrangements for the above site.

LLFA Comment

Pre- and post-development permeable and impermeable areas must be provided.

Response

Pre and post-development impermeable area plans are provided within Appendix A of this document.

LLFA Comment

The following flow and volume rates must be provided:

- *existing runoff rates during a 100% Annual Exceedance Probability (AEP), 3.33% AEP, 1% AEP storm events*
- *post development discharge rates during a 100% AEP, 3.33% AEP, 1% AEP and 1% AEP + Climate Change storm events (the 100% AEP, 3.33% AEP, 1%AEP incl. climate change have been provided in Appendix D of the Drainage Strategy, but not in the main report)*
- *greenfield runoff rate (QBAR)*
- *water storage capacity volumes of the proposed drainage features to attenuate the 1% AEP + Climate Change storm event.*

According to section 24.3 in the SuDS Manual (2015), FEH methods should be the preferred approach for developing runoff estimates for us in surface water management design. Therefore, the drainage calculations provided in Appendix D of the drainage strategy, as well as the proposed Drainage Layout (if required) must be updated accordingly. If an alternative runoff estimation method is proposed to be used, then the applicant must provide an adequate explanation as to why this is being used.).

Response

Runoff rates for pre and post development and greenfield rates are included within Appendix B of this document. A discharge rate of 1 l/s has been proposed as a practical minimum flow rate that balances and mitigates both the increased flood risk and blockage risk to the proposed drainage system.

The drainage calculations have been updated to reflect the FEH data as well as consideration for 10% urban creep, contained within Appendix C. The drainage design has been updated to suit relevant information and is included within Appendix D of this document.

LLFA Comment

The Drainage Strategy shows the proposed outfall discharging into the existing ditch. It also mentions that further surveys are required to confirm the outfall's exact location, dimensions and levels prior to construction.

The outfall's exact location, as well as its dimensions and levels must be confirmed.

It must be also confirmed whether an allowance for urban creep has been taken into consideration (and if not, it must be considered).

The required and proposed volumes of storage and sizing of the proposed drainage features must also be provided.

Response

Further topographical survey for the ditch has been undertaken and confirms that levels to discharge to ditch are acceptable, topographical survey is included within Appendix E of this document.

An allowance for 10% urban creep has now been accounted for within the drainage calculations which are included in Appendix C.

LLFA Comment

Evidence of a third-party agreement to discharge surface water into their drainage system (ditch) must be provided.

Response

The proposed outfall is located within the applicant's land ownership boundary as shown in Appendix F. As the applicant is the riparian owner of the watercourse third party consent is not required.

LLFA Comment

A Management and Maintenance plan has been provided. The Drainage Strategy also notes that the surface water drainage network will be managed throughout the lifetime by the owners of the proposed development. It must be clarified whether this includes the permeable paving.

The proprietary device manuals, for all drainage features and SuDS devices must also be provided.

Response

All onsite drainage and SuDS features are to be maintained throughout the lifetime by the owners of the proposed development, including the proposed permeable paving . The proprietary device manuals for the proposed drainage features are included within Appendix G.

LLFA Comment

Consideration of how exceedance flows for events greater than the 1 in 100 year + 40% Climate Change event will be managed and mitigated on site without significantly increasing flood risks (both on site and outside the development) must be provided.

Response

Exceedance flow paths for events greater than the 1 in 100 year + 40% climate change event have been added to the proposed drainage layout, which is included within Appendix D.

LLFA Comment

The foul drainage proposed outfall destination must be prioritised as per the hierarchy of foul drainage (requirement H1 of the Building Regulations 2010). In the first instance this is into the existing public foul sewer network if available. There may be existing sewers within the vicinity of the site that have now been made public due to the blanket adoption of sewers undertaken after the legislation change in 2011. It is recommended that survey work be undertaken to identify any potential assets near the site that could be a point of connection for foul water and the design adjusted accordingly. If no assets are discovered, then suitable evidence and justification of the proposed method of foul water disposal should be submitted.

Response

Asset plans, contained in Appendix H, show that there are no public foul sewers within the vicinity of the site, following the foul drainage hierarchy set out in the drainage strategy document the proposed method has been adopted.

LLFA Comment

A foul water drainage strategy, with supporting flow calculations in line with Sewerage Sector Guidance and/or Building Regulations Part H must be provided, including:

o A detailed drainage layout, confirming the outfall location.

o Confirmation of permission to connect to a private/public sewer, if applicable, must also be provided.

Response

Refer to asset mapping showing no foul sewers within the vicinity of the site. Proposed foul drainage is shown within the drainage layout with associated package treatment plant information contained within Appendix D.

LLFA Comment

Confirmation of an environmental permit for foul discharges, if relevant, should also be provided.

Response

The proposed drainage design is to be in accordance with the general binding rules for small sewage discharges and therefore doesn't require an environmental permit.

LLFA Comment

The Flood Risk Assessment (FRA), dated 15/11/2024, identified that in the modelled 1 in 30 year, 1 in 100 year and 1 in 1000 year pluvial storm events, most of the site is shown to be located outside the flood depths for each of the abovementioned events, except the south-eastern site boundary. Consequently, the proposed development footprint is shown to be located outside the modelled flood depths. However, on 28/01/2025, the EA released the New National Flood Risk Assessment (NaFRA) and 'Risk of flooding from surface water' data and therefore, the outcomes of the FRA related to the surface water flood risk must be updated, if required.

The FRA also concluded that based on the nature of the proposed development, stables and static home and that all analysed sources of flooding were low risk, no mitigation measures are recommended. However, following the abovementioned updates on flood risk mapping, the conclusions of the FRA must be updated, if required.

Response

The latest flood risk information has been reviewed in accordance with the extract below. Based on the latest available dataset the previous findings of the FRA remain unchanged.



Appendices

Appendix A – Impermeable Area Plan

Appendix B - Runoff Rates

Appendix C – Drainage Calculations

Appendix D – Proposed Drainage Layout

Appendix E – Additional Topographic Survey

Appendix F – Land Ownership Plan

Appendix G - Proprietary Device Manuals

Appendix H – Asset Mapping

Appendix A - Impermeable Area Plan

EXISTING IMPERMEABLE AREA

SCALE: 1:250

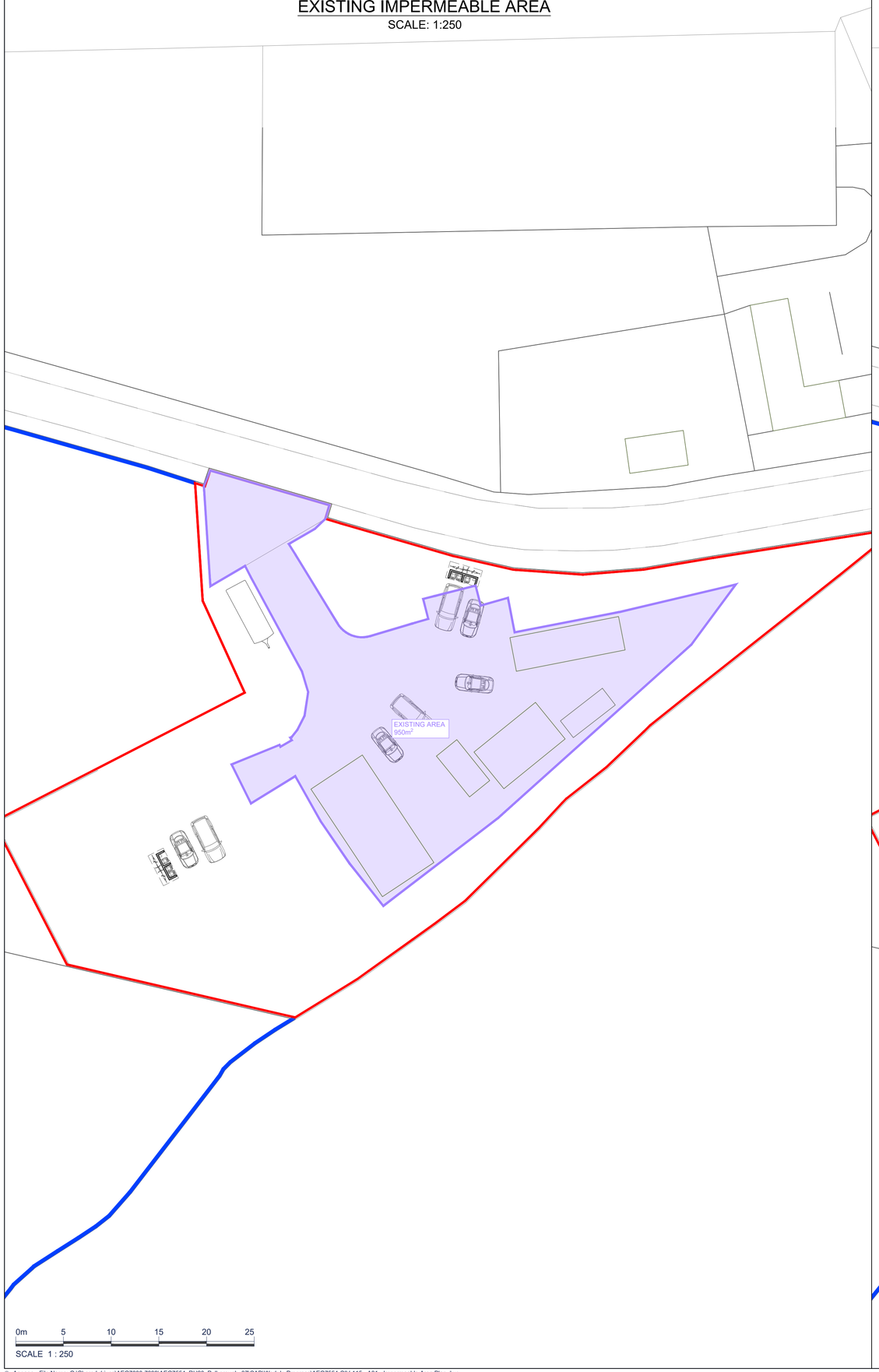

SCALE 1 : 250

PROPOSED IMPERMEABLE AREA

SCALE: 1:250

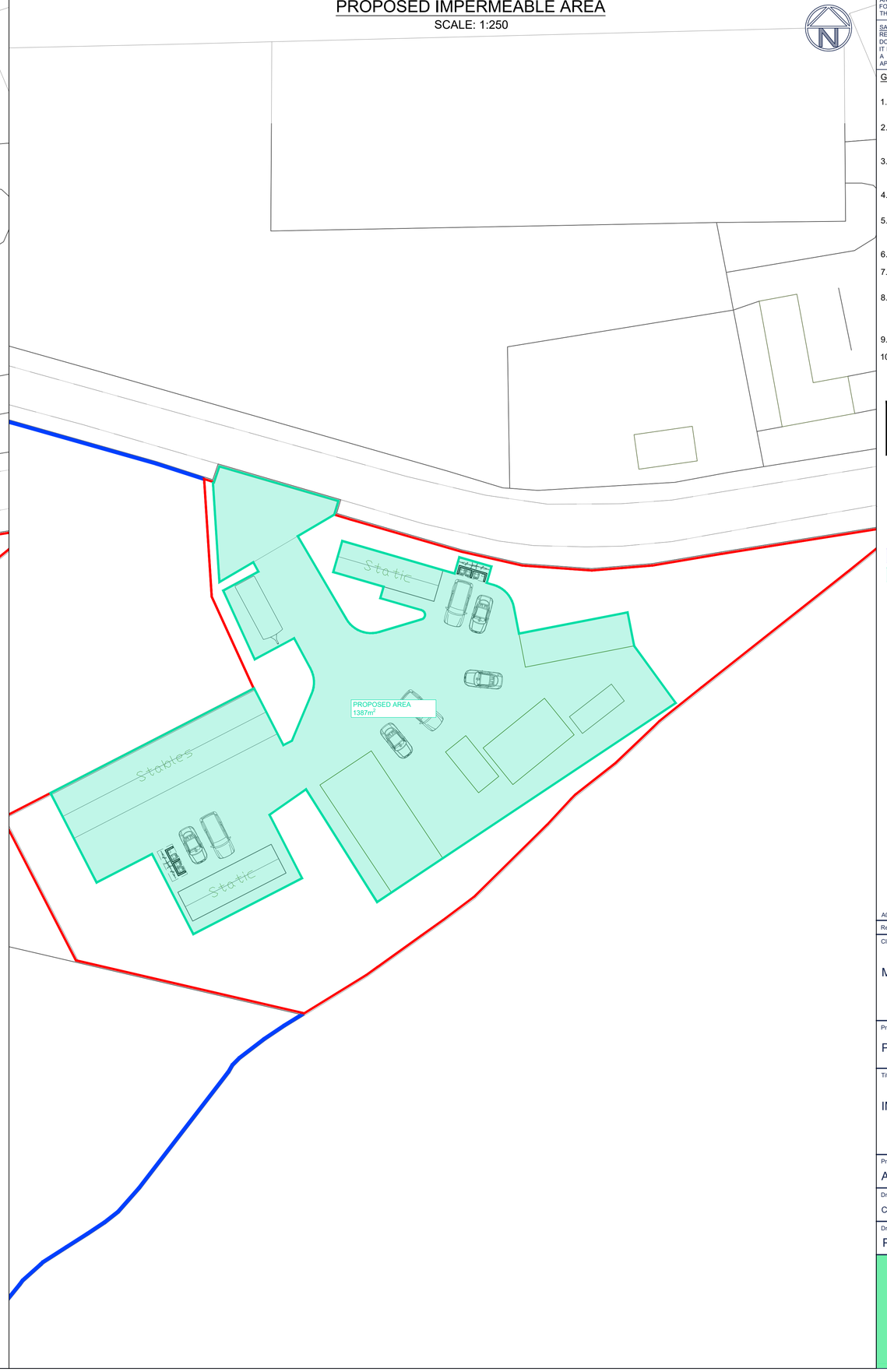

DO NOT SCALE THIS DRAWING, USE FIGURED DIMENSIONS ONLY.
THE CONTRACTOR MUST CHECK & VERIFY ALL DIMENSIONS ON SITE.
ANY DISCREPANCIES MUST BE REPORTED IMMEDIATELY TO THE ENGINEER FOR CLARIFICATION BEFORE PROCEEDING.
THIS DRAWING IS COPYRIGHT AND OWNED BY AEGAEA.

SAFETY, HEALTH AND ENVIRONMENTAL INFORMATION

REFER TO THE RELEVANT CONSTRUCTION (DESIGN AND MANAGEMENT) DOCUMENTATION WHERE APPLICABLE.
IT IS ASSUMED THAT ALL WORKS ON THIS DRAWING WILL BE CARRIED OUT BY A COMPETENT CONTRACTOR, WORKING WHERE APPROPRIATE TO AN APPROVED METHOD STATEMENT.

GENERAL NOTES

1. THIS DRAWING IS INDICATIVE ONLY AND SUBJECT TO CHANGE DURING DETAILED DESIGN AND APPROVALS FROM RELEVANT STATUTORY BODIES.
2. POSITIONS OF EXISTING SERVICES/STATUTORY UNDERTAKERS APPARATUS ADJACENT TO OR CROSSING PROPOSED EXCAVATIONS ARE TO BE CONFIRMED PRIOR TO START ON SITE.
3. THIS DRAWING IS TO BE READ IN CONJUNCTION WITH AND CHECKED AGAINST ALL ENGINEERING DETAILS, SPECIFICATIONS, GEOTECHNICAL AND OTHER RELEVANT DOCUMENTATION PROVIDED.
4. THIS DRAWING IS SCHEMATIC FOR CLARITY ONLY. POSITIONS OF PIPE RUNS AND MANHOLES MAY VARY ON SITE DUE TO SITE CONDITIONS.
5. WHERE EXISTING OR PROPOSED TREES ARE ADJACENT TO ACCESS ROADS OR DRAINAGE, ROOT BARRIERS (TYPE TO BE APPROVED) ARE REQUIRED TO PREVENT STRUCTURAL DAMAGE.
6. ANY ANOMALY OR CONTRADICTIONS BETWEEN ANY OF THE ABOVE IS TO BE REPORTED IMMEDIATELY.
7. THE DESIGN IS TO COMPLY IN ALL ASPECTS WITH THE CURRENT BRITISH STANDARDS, BUILDING REGULATIONS AND BUILDING LEGISLATION ETC.
8. ALL PIPE SIZES, CHAMBER DEPTHS, SIZE & QUANTITY SUBJECT TO REVIEW AND DETAILED DESIGN. ALL ADOPTED PIPE WORK ROUTING AND ANY EASEMENTS SUBJECT TO FULL DESIGN REVIEW AND APPROVAL BY THE RELEVANT BODIES.
9. DRAINAGE DESIGN SUBJECT TO DETAILED LEVELS AND EXTERNAL WORKS DESIGN.
10. SUBJECT TO DETAILED DESIGN AND APPROVAL.

THIS DRAWING IS FOR PLANNING PURPOSES ONLY
AND NOT FOR CONSTRUCTION
SUBJECT TO WATER AUTHORITY TECHNICAL APPROVAL

LEGEND

- EXISTING IMPERMEABLE AREA
- PROPOSED IMPERMEABLE AREA

Rev	Date	Description	By
A01	11.06.25	FIRST ISSUE	CM

Client

MANORWOOD CONSTURCTION LIMITED

Project

PARSONS FIELD STABLES

Title

IMPERMEABLE AREA PLAN

Project No.	Drawing No.			Revision
AEG7554	CIV-115			A01
Drawn	Checked	Approved	Date	Scale @ A1
CM	DB	JM	JUN 2025	1:250

Drawing Status

PLANNING

aegaea
water, civils and environment

© Aegaea - File Name: G:\Shared drives\AEG7000-7999\AEG7554_RH20_Pulborough_07\CAD\Work In Progress\AEG7554-CIV-115 - A01 - Impermeable Area Plan.dwg

Appendix B - Runoff Rates

Greenfield runoff rate estimation tool

This is an estimation of the greenfield runoff rates that are used to meet normal best practice criteria in line with Environment Agency guidance “Rainfall runoff management for developments”, SC030219 (2013), the SuDS Manual C753 (CIRIA, 2015) and the non-statutory standards for SuDS (Defra, 2015). This information on greenfield runoff rates may be the basis for setting consents for the drainage of surface water runoff from sites.

Project details

Date	21/07/2025
Calculated by	CM
Reference	Existing
Model version	2.0.1

Location

Site name	Parsons Field Stables
Site location	Pickhurst Lane



Site easting	505521
Site northing	120889

Site details

Total site area (ha)	0.0950 ha

Greenfield runoff

Method

Method	IH124

IH124

	My value		Map value
SAAR (mm)	845 mm		845
How should SPR be derived?	WRAP soil type		
WRAP soil type	4		4
SPR	0.47		
QBar (IH124) (l/s)	0.57 l/s		

Growth curve factors

	My value		Map value
Hydrological region	7		7
1 year growth factor	0.85		
2 year growth factor	0.88		
10 year growth factor	1.62		
30 year growth factor	2.3		
100 year growth factor	3.19		
200 year growth factor	3.74		

Results

Method	IH124
Flow rate 1 year (l/s)	0.49 l/s
Flow rate 2 year (l/s)	0.5 l/s
Flow rate 10 years (l/s)	0.93 l/s
Flow rate 30 years (l/s)	1.3 l/s
Flow rate 100 years (l/s)	1.8 l/s
Flow rate 200 years (l/s)	2.1 l/s

Disclaimer

This report was produced using the Greenfield runoff rate estimation tool (2.0.1) developed by HR Wallingford and available at uksuds.com (https://www.uksuds.com/). The use of this tool is subject to the UK SuDS terms and conditions and licence agreement, which can both be found at uksuds.com/terms-conditions (https://www.uksuds.com/terms-conditions). The outputs from this tool have been used to estimate Greenfield runoff rates. The use of these results is the responsibility of the users of this tool. No liability will be accepted by HR Wallingford, the Environment Agency, Centre for Ecology and Hydrology, Wallingford Hydrosolutions or any other organisation for the use of these data in the design or operational characteristics of any drainage scheme.

Greenfield runoff rate estimation tool

www.uksuds.com | Greenfield runoff rate estimation tool (https://www.uksuds.com/)

This is an estimation of the greenfield runoff rates that are used to meet normal best practice criteria in line with Environment Agency guidance “Rainfall runoff management for developments”, SC030219 (2013), the SuDS Manual C753 (CIRIA, 2015) and the non-statutory standards for SuDS (Defra, 2015). This information on greenfield runoff rates may be the basis for setting consents for the drainage of surface water runoff from sites.

Project details

Date	21/07/2025
Calculated by	CM
Reference	Proposed
Model version	2.0.1

Location

Site name	Parsons Field Stables
Site location	Pickhurst Lane



Site easting	505521
Site northing	120889

Site details

Total site area (ha)	0.1387 ha

Greenfield runoff

Method

Method	IH124

IH124

	My value		Map value
SAAR (mm)	845 mm		845
How should SPR be derived?	WRAP soil type		
WRAP soil type	4		4
SPR	0.47		
QBar (IH124) (l/s)	0.83 l/s		

Growth curve factors

	My value		Map value
Hydrological region	7		7
1 year growth factor	0.85		
2 year growth factor	0.88		
10 year growth factor	1.62		
30 year growth factor	2.3		
100 year growth factor	3.19		
200 year growth factor	3.74		

Results

Method	IH124
Flow rate 1 year (l/s)	0.71 l/s
Flow rate 2 year (l/s)	0.73 l/s
Flow rate 10 years (l/s)	1.4 l/s
Flow rate 30 years (l/s)	1.9 l/s
Flow rate 100 years (l/s)	2.7 l/s
Flow rate 200 years (l/s)	3.1 l/s

Disclaimer

This report was produced using the Greenfield runoff rate estimation tool (2.0.1) developed by HR Wallingford and available at uksuds.com (https://www.uksuds.com/). The use of this tool is subject to the UK SuDS terms and conditions and licence agreement, which can both be found at uksuds.com/terms-conditions (https://www.uksuds.com/terms-conditions). The outputs from this tool have been used to estimate Greenfield runoff rates. The use of these results is the responsibility of the users of this tool. No liability will be accepted by HR Wallingford, the Environment Agency, Centre for Ecology and Hydrology, Wallingford Hydrosolutions or any other organisation for the use of these data in the design or operational characteristics of any drainage scheme.

Appendix C – Drainage Calculations

Design Settings

Rainfall Methodology	FEH-22	Minimum Velocity (m/s)	1.00
Return Period (years)	5	Connection Type	Level Soffits
Additional Flow (%)	0	Minimum Backdrop Height (m)	0.200
CV	1.000	Preferred Cover Depth (m)	1.200
Time of Entry (mins)	5.00	Include Intermediate Ground	✓
Maximum Time of Concentration (mins)	30.00	Enforce best practice design rules	✓
Maximum Rainfall (mm/hr)	50.0		

Nodes

Name	Area (ha)	T of E (mins)	Cover Level (m)	Diameter (mm)	Easting (m)	Northing (m)	Depth (m)
S1	0.007	5.00	20.900	350	505501.236	120899.239	1.300
S2			20.370	350	505483.445	120878.324	1.232
S3	0.038	5.00	20.350	1200	505487.498	120870.328	1.363
S4			19.600	600	505488.287	120867.228	0.781
OUTFALL			19.500		505490.412	120858.876	0.767

Links

Name	US Node	DS Node	Length (m)	ks (mm) / n	US IL (m)	DS IL (m)	Fall (m)	Slope (1:X)	Dia (mm)	T of C (mins)	Rain (mm/hr)
1.000	S1	S2	27.458	0.600	19.600	19.138	0.462	59.4	100	5.46	50.0
1.001	S2	S3	8.965	0.600	19.138	18.987	0.151	59.4	100	5.61	50.0
1.002	S3	S4	3.199	0.600	18.987	18.869	0.118	27.1	100	5.64	50.0
1.003	S4	OUTFALL	8.618	0.600	18.819	18.733	0.086	100.2	150	5.79	50.0

Name	Vel (m/s)	Cap (l/s)	Flow (l/s)	US Depth (m)	DS Depth (m)	Σ Area (ha)	Σ Add Inflow (l/s)	Pro Depth (mm)	Pro Velocity (m/s)
1.000	1.001	7.9	1.3	1.200	1.132	0.007	0.0	27	0.730
1.001	1.001	7.9	1.3	1.132	1.263	0.007	0.0	27	0.731
1.002	1.488	11.7	8.1	1.263	0.631	0.045	0.0	61	1.606
1.003	1.004	17.7	8.1	0.631	0.617	0.045	0.0	71	0.981

Pipeline Schedule

Link	Length (m)	Slope (1:X)	Dia (mm)	Link Type	US CL (m)	US IL (m)	US Depth (m)	DS CL (m)	DS IL (m)	DS Depth (m)
1.000	27.458	59.4	100	Circular	20.900	19.600	1.200	20.370	19.138	1.132
1.001	8.965	59.4	100	Circular	20.370	19.138	1.132	20.350	18.987	1.263
1.002	3.199	27.1	100	Circular	20.350	18.987	1.263	19.600	18.869	0.631
1.003	8.618	100.2	150	Circular	19.600	18.819	0.631	19.500	18.733	0.617

Link	US Node	Dia (mm)	Node Type	MH Type	DS Node	Dia (mm)	Node Type	MH Type
1.000	S1	350	Manhole	Adoptable	S2	350	Manhole	Adoptable
1.001	S2	350	Manhole	Adoptable	S3	1200	Manhole	Adoptable
1.002	S3	1200	Manhole	Adoptable	S4	600	Manhole	Adoptable
1.003	S4	600	Manhole	Adoptable	OUTFALL		Junction	

Flow+ v15.0 Copyright © 1988-2025 Causeway Technologies Ltd

Simulation Settings

Rainfall Methodology	FEH-22	Analysis Speed	Normal	Starting Level (m)	
Rainfall Events	Singular	Skip Steady State	x	Check Discharge Rate(s)	x
Summer CV	1.000	Drain Down Time (mins)	240	Check Discharge Volume	x
Winter CV	1.000	Additional Storage (m³/ha)	0.0		

Storm Durations

15	30	60	120	180	240	360	480	600	720	960	1440

Return Period (years)	Climate Change (CC %)	Additional Area (A %)	Additional Flow (Q %)
1	0	10	0
30	0	10	0
100	45	10	0

Node S3 Online Orifice Control

Flap Valve	x	Design Depth (m)	1.100	Discharge Coefficient	0.600
Replaces Downstream Link	x	Design Flow (l/s)	1.0		
Invert Level (m)	18.987	Diameter (m)	0.021		

Node S1 Carpark Storage Structure

Base Inf Coefficient (m/hr)	0.00000	Invert Level (m)	20.450	Slope (1:X)	150.0
Side Inf Coefficient (m/hr)	0.00000	Time to half empty (mins)		Depth (m)	0.350
Safety Factor	2.0	Width (m)	3.000	Inf Depth (m)	
Porosity	0.30	Length (m)	9.400		

Node S3 Carpark Storage Structure

Base Inf Coefficient (m/hr)	0.00000	Invert Level (m)	19.650	Slope (1:X)	150.0
Side Inf Coefficient (m/hr)	0.00000	Time to half empty (mins)		Depth (m)	0.600
Safety Factor	2.0	Width (m)	8.800	Inf Depth (m)	
Porosity	0.30	Length (m)	24.000		

Node S2 Depth/Area Storage Structure

Base Inf Coefficient (m/hr)	0.00000	Safety Factor	2.0	Invert Level (m)	19.138
Side Inf Coefficient (m/hr)	0.00000	Porosity	0.95	Time to half empty (mins)	

Depth (m)	Area (m²)	Inf Area (m²)	Depth (m)	Area (m²)	Inf Area (m²)	Depth (m)	Area (m²)	Inf Area (m²)
0.000	15.0	15.0	0.400	15.0	20.5	0.401	0.0	20.5

Flow+ v15.0 Copyright © 1988-2025 Causeway Technologies Ltd

Results for 1 year +10% A Critical Storm Duration. Lowest mass balance: 100.00%

Node Event	US Node	Peak (mins)	Level (m)	Depth (m)	Inflow (l/s)	Node Vol (m³)	Flood (m³)	Status
15 minute summer	S1	10	19.624	0.024	1.0	0.0023	0.0000	OK
180 minute summer	S2	128	19.413	0.275	2.1	3.9398	0.0000	SURCHARGED
180 minute summer	S3	128	19.413	0.426	2.4	0.4813	0.0000	SURCHARGED
180 minute summer	S4	128	18.838	0.019	0.6	0.0054	0.0000	OK
180 minute summer	OUTFALL	128	18.752	0.019	0.6	0.0000	0.0000	OK

Link Event (Upstream Depth)	US Node	Link	DS Node	Outflow (l/s)	Velocity (m/s)	Flow/Cap	Link Vol (m³)	Discharge Vol (m³)
15 minute summer	S1	1.000	S2	1.0	0.842	0.123	0.1208	
180 minute summer	S2	1.001	S3	-1.7	-0.222	-0.221	0.0701	
180 minute summer	S3	1.002	S4	0.6	0.758	0.050	0.0025	
180 minute summer	S4	1.003	OUTFALL	0.6	0.463	0.033	0.0110	8.6

Flow+ v15.0 Copyright © 1988-2025 Causeway Technologies Ltd

Results for 30 year +10% A Critical Storm Duration. Lowest mass balance: 98.40%

Node Event	US Node	Peak (mins)	Level (m)	Depth (m)	Inflow (l/s)	Node Vol (m³)	Flood (m³)	Status
180 minute winter	S1	172	19.922	0.322	1.0	0.0309	0.0000	SURCHARGED
180 minute winter	S2	172	19.921	0.783	4.1	5.7823	0.0000	SURCHARGED
180 minute winter	S3	176	19.921	0.934	6.1	13.1913	0.0000	SURCHARGED
180 minute winter	S4	176	18.842	0.023	0.9	0.0065	0.0000	OK
180 minute winter	OUTFALL	176	18.756	0.023	0.9	0.0000	0.0000	OK

Link Event (Upstream Depth)	US Node	Link	DS Node	Outflow (l/s)	Velocity (m/s)	Flow/Cap	Link Vol (m³)	Discharge Vol (m³)
180 minute winter	S1	1.000	S2	0.9	0.619	0.115	0.2148	
180 minute winter	S2	1.001	S3	-3.3	-0.418	-0.416	0.0701	
180 minute winter	S3	1.002	S4	0.9	0.847	0.075	0.0033	
180 minute winter	S4	1.003	OUTFALL	0.9	0.522	0.050	0.0145	19.0

Flow+ v15.0 Copyright © 1988-2025 Causeway Technologies Ltd

Results for 100 year +45% CC +10% A Critical Storm Duration. Lowest mass balance: 97.79%

Node Event	US Node	Peak (mins)	Level (m)	Depth (m)	Inflow (l/s)	Node Vol (m³)	Flood (m³)	Status
240 minute winter	S1	232	20.240	0.640	1.4	0.0614	0.0000	SURCHARGED
240 minute winter	S2	232	20.239	1.101	2.9	5.8128	0.0000	FLOOD RISK
240 minute winter	S3	236	20.239	1.252	8.9	33.6899	0.0000	FLOOD RISK
240 minute winter	S4	236	18.844	0.025	1.0	0.0070	0.0000	OK
240 minute winter	OUTFALL	236	18.757	0.024	1.0	0.0000	0.0000	OK

Link Event (Upstream Depth)	US Node	Link	DS Node	Outflow (l/s)	Velocity (m/s)	Flow/Cap	Link Vol (m³)	Discharge Vol (m³)
240 minute winter	S1	1.000	S2	1.3	0.580	0.163	0.2148	
240 minute winter	S2	1.001	S3	-2.3	-0.294	-0.292	0.0701	
240 minute winter	S3	1.002	S4	1.0	0.883	0.087	0.0037	
240 minute winter	S4	1.003	OUTFALL	1.0	0.545	0.058	0.0162	25.1

Flow+ v15.0 Copyright © 1988-2025 Causeway Technologies Ltd

Appendix D - Proposed Drainage Layout

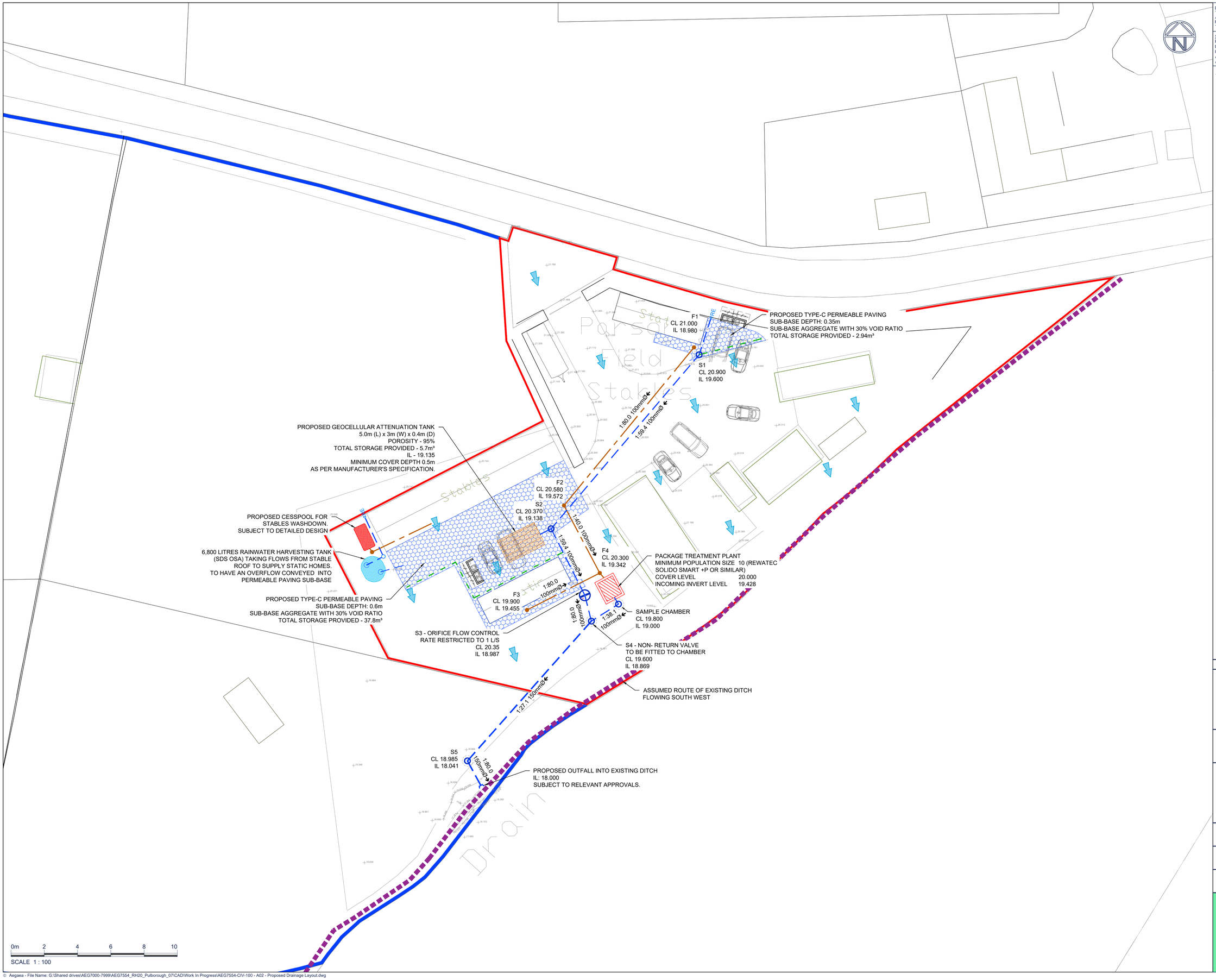

DO NOT SCALE THIS DRAWING. USE FIGURED DIMENSIONS ONLY.
THE CONTRACTOR MUST CHECK & VERIFY ALL DIMENSIONS ON SITE.
ANY DISCREPANCIES MUST BE REPORTED IMMEDIATELY TO THE ENGINEER FOR CLARIFICATION BEFORE PROCEEDING.
THIS DRAWING IS COPYRIGHT AND OWNED BY AEGAEA.

SAFETY, HEALTH AND ENVIRONMENTAL INFORMATION
REFER TO THE RELEVANT CONSTRUCTION (DESIGN AND MANAGEMENT) DOCUMENTATION WHERE APPLICABLE.
IT IS ASSUMED THAT ALL WORKS ON THIS DRAWING WILL BE CARRIED OUT BY A COMPETENT CONTRACTOR, WORKING WHERE APPROPRIATE TO AN APPROVED METHOD STATEMENT.

GENERAL NOTES

1. THIS DRAWING IS INDICATIVE ONLY AND SUBJECT TO CHANGE DURING DETAILED DESIGN AND APPROVALS FROM RELEVANT STATUTORY BODIES.
2. POSITIONS OF EXISTING SERVICES/STATUTORY UNDERTAKERS APPARATUS ADJACENT TO OR CROSSING PROPOSED EXCAVATIONS ARE TO BE CONFIRMED PRIOR TO START ON SITE.
3. THIS DRAWING IS TO BE READ IN CONJUNCTION WITH AND CHECKED AGAINST ALL ENGINEERING DETAILS, SPECIFICATIONS, GEOTECHNICAL AND OTHER RELEVANT DOCUMENTATION PROVIDED.
4. THIS DRAWING IS SCHEMATIC FOR CLARITY ONLY. POSITIONS OF PIPE RUNS AND MANHOLES MAY VARY ON SITE DUE TO SITE CONDITIONS.
5. WHERE EXISTING OR PROPOSED TREES ARE ADJACENT TO ACCESS ROADS OR DRAINAGE, ROOT BARRIERS (TYPE TO BE APPROVED) ARE REQUIRED TO PREVENT STRUCTURAL DAMAGE.
6. ANY ANOMALY OR CONTRADICTIONS BETWEEN ANY OF THE ABOVE IS TO BE REPORTED IMMEDIATELY.
7. THE DESIGN IS TO COMPLY IN ALL ASPECTS WITH THE CURRENT BRITISH STANDARDS, BUILDING REGULATIONS AND BUILDING LEGISLATION ETC.
8. ALL PIPE SIZES, CHAMBER DEPTHS, SIZE & QUANTITY SUBJECT TO REVIEW AND DETAILED DESIGN. ALL ADOPTED PIPE WORK ROUTING AND ANY EASEMENTS SUBJECT TO FULL DESIGN REVIEW AND APPROVAL BY THE RELEVANT BODIES.
9. DRAINAGE DESIGN SUBJECT TO DETAILED LEVELS AND EXTERNAL WORKS DESIGN.
10. SUBJECT TO DETAILED DESIGN AND APPROVAL.

THIS DRAWING IS FOR PLANNING PURPOSES ONLY
AND NOT FOR CONSTRUCTION
SUBJECT TO WATER AUTHORITY TECHNICAL APPROVAL

LEGEND

- SITE BOUNDARY
- LAND OWNERSHIP BOUNDARY
- PROPOSED SURFACE WATER DRAINAGE
- PROPOSED FOUL DRAINAGE
- PROPOSED RODDING EYE
- PROPOSED SURFACE WATER ORIFICE PLATE
- PROPOSED PERMEABLE PAVING (GRAVEL SURFACING)
- PROPOSED ATTENUATION TANK
- PROPOSED PERMEABLE PAVING OUTLET PERFORATE PIPE
- PROPOSED RAINWATER HARVESTING TANK
- EXISTING DITCH
- OVERLAND FLOW ROUTE

Rev	Date	Description	By
A02	11.06.25	UPDATED TO SUIT LLFA COMMENTS	CM
A01	28.03.25	FIRST ISSUE	CM

Client
MANORWOOD CONSTURCTION LIMITED

Project
PARSONS FIELD STABLES

Title
PROPOSED DRAINAGE LAYOUT

Project No.	Drawing No.	Revision
AEG7554	CIV-100	A02

Drawn	Checked	Approved	Date	Scale @ A1
CM	DB	JM	MAR 2025	1:100

Drawing Status
PLANNING

aegaea
water, civils and environment

Appendix E – Additional Topographic Survey

NOTES
Survey accurate at time of site attendance. Do not scale from printed drawings except for planning purposes.

Grid is based on ordnance survey national grid fixed by GPS satellite active network.
Levels are related to the ordnance survey GPS active Network and transformed using the OSGM15 & OSTN15 model.

Drainage pipe sizes (where shown) have been gauged from the surface for safety reasons and should be regarded as approximate only.

Tree species (where shown) should be treated with caution and expert identification is advised.

Although this is a digital survey the accuracy and amount of detail shown is only commensurate with the graphicall scale of mapping as specified. Care should be exercised when working to larger scales.

Visible features in the vicinity of the boundaries as shown above, may not represent the extent of legally conveyed ownership.

Whilst every effort has been made to achieve accuracy on this plan, CRUCIAL clearance dimensions, levels and invert levels should be checked prior to design and construction.

Areas of dense undergrowth cannot be surveyed in detail, these areas will be shown in outline only and marked as 'dense undergrowth' on the plan.

Kerb levels have been taken on the top of the channel.

ORDNANCE OVERLAY
Ordnance Survey, (c) Crown Copyright 2025. All rights reserved. Licence number 100022432

Ordnance Survey Overlay
National Grid 1:2500 (Accuracy data) Surveying tolerances:
Distances up to 200 metres ±1 in100m
Distances 200 to1,000 metres ±2m
Distances over 1,000 metres ±1 in 500m



medlams
surveys limited
www.medlams-surveys.co.uk
info@medlams-surveys.co.uk
07717 205 388

project:	Parsonsfield Stables, Pickhurst lane, Pulborough		
client:	Manorwood	job ref:	S3078
title:	Measured topo survey	scale	1:200@A1
date	March 2025	dwg no:	EX01 rev: A

Appendix F - Land Ownership Plan

Ordnance Survey
Ukmapcentre.com

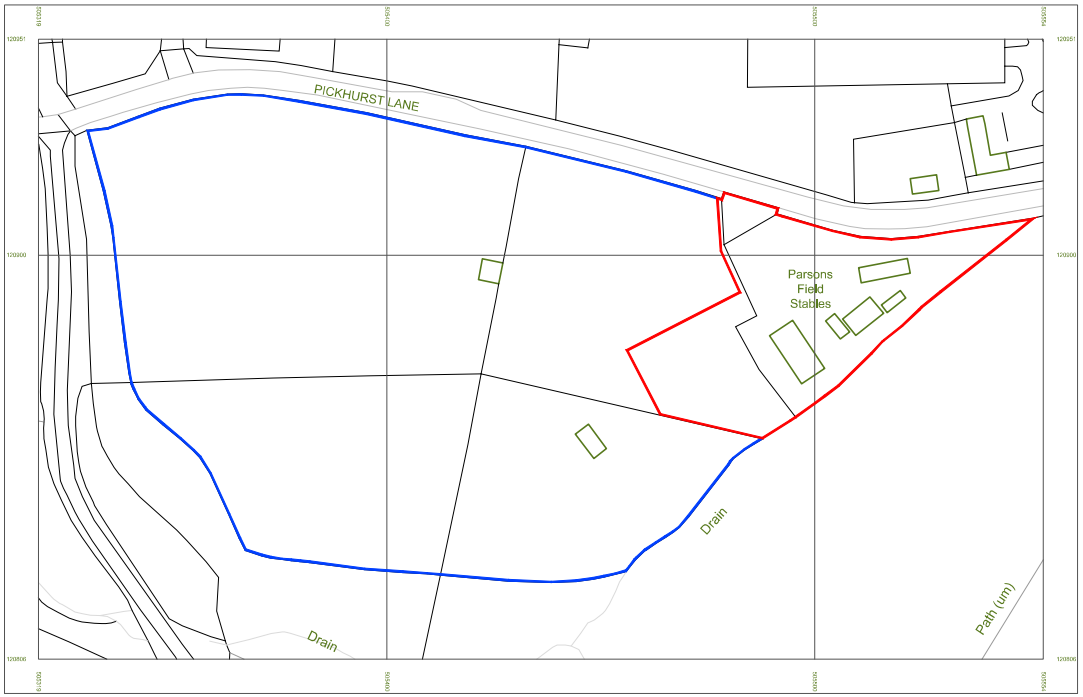

Serial number: 275221

©Crown copyright and database right 2023
Ordnance Survey, licence 100048957
Reproduction in whole or in part is prohibited
without the prior permission of Ordnance Survey

Location Plan

1:1250	EXISTING

This drawing is the copyright of Manorwood Construction Ltd but may be used for planning purposes by the Local Authority without breach of copyright.

Do not scale from this drawing unless for Local Authority planning purposes.

All dimensions must be checked on site prior to commencement of works.

Construction (Design and Management) Regulations 2015

This drawing is intended for Planning purposes only and as such does not highlight residual design related health and safety risks.

This information can be provided on request; however, it is anticipated that the full extent of residual risks will be identified during the detailed Building Regulations or construction design Status and prior to construction works commencing on site.

All responsibilities and duties of Principle Designer as stated within the above regulations now revert to the client unless Manorwood are appointed to undertake Building Regulations or construction drawings.

MANORWOOD
building on tradition

Suite 114
26 The Hornet
Chichester
West Sussex
PO19 7BB

tel: 01243 201 102
email: enquiries@manorwood.co.uk
web: www.manorwood.co.uk

Address	
	Parsons Field Stables, Pickhurst Lane, Pulborough, RH20 1DA
Drawing No.	2311PA_R0.0_000
Scale @ A3	1:1250
Job No.	2311PA_R0.0
Drawn By	MD
Checked By	BK
Drawn On	23.11.2023
Issued On	14.02.2024
Status	Existing
Drawing	Location Plan
Submission	Planning
Revision	000

.

N

Indicative: 0.0°

1m @ 1:
50
100
200
500
1250

Appendix G - Proprietary Device Manuals

015711
Shallow Dig Cess Pools & Silage
Installation & Maintenance Guidelines

Kingspan Water & Energy Service Contact Numbers:

UK: 0333 240 6868

NI: 028 3836 4600

ROI: 0818 543 500

Enclosed Documents

DS1214	**Guernsey Shallow Dig Cess Pools (5700, 7150 & 9150 Litres)**
DS1219	**Shallow Dig Cess Pools (2800, 3800, 4800, 5700, 7150 & 9150 Litres)**
DS1220	**Shallow Dig Silage Tanks (2800, 3800, 4800, 5700, 7150 & 9150 Litres)**
DS1336	**Shallow Dig Cess Pools (2800, 3800, 4800, 5700, 7150 & 9150 Litres) - Norway**

Issue	Description	Date
05	ECR189 / ECN1626 – Remove Tank Feet	September 2022
04	ECN - 1621	September 2022

HEALTH & SAFETY

These warnings are provided in the interest of safety. You must read them carefully before installing or using the equipment.

It is important that this document is retained with the equipment for future reference. Should the equipment be transferred to a new owner, always ensure that all relevant documents are supplied in order that the new owner can be acquainted with the functioning of the equipment and the relevant warnings.

Installation should only be carried out by a suitably experienced contractor, following these guidelines.

We recommend the use of a dust mask and gloves when cutting GRP components.

Electrical work should be carried out by a qualified electrician.

Contaminated surface water can contain substances harmful to human health. Any person carrying out maintenance on the equipment should wear suitable protective clothing, including gloves. Good hygiene practice should also be observed.

Access covers should be selected with reference to the location of the unit and traffic loads to be accommodated. These are not (normally) part of the unit's supply.

When covers are removed precautions must be taken against personnel falling into the unit.

Should you wish to inspect the operation of the equipment, please observe all necessary precautions, including those listed below, which apply to maintenance procedures.

Ensure that you are familiar with the safe working areas and accesses. Ensure that the working area is adequately lit.

Take care to maintain correct posture, particularly when lifting. Use appropriate lifting equipment when necessary. Keep proper footing and balance at all times. Avoid any sharp edges.

MAINTENANCE

The correct ongoing maintenance is essential for the proper operation of the equipment. Operators who rely on high level alarms to prompt them to empty the unit run the risk of polluting, should the alarm not work, hence the ongoing maintenance of the alarm systems is fundamental if pollution incidents are to be avoided.

The removal of sludge and liquid from the unit should be carried out by a contractor holding the relevant permits to transport and dispose of such waste. The contractor should refer to the guidelines in this document.

CONTENTS

HEALTH & SAFETY 2
1.0 Introduction 3
2.0 Handling & Storage 3
3.0 Site Planning 3
4.0 Installation – General 4
5.0 Unit Installation 5
6.0 Operation 6
7.0 Maintenance 6
8.0 Warranty 6
NOTICES: 8

1.0 Introduction

1.1 Kingspan shallow installation tanks are designed to be installed in areas where shallow dig depths are required due to minimal invert levels or difficult ground conditions. Typically, in areas where granite rock strata are close to the surface.

1.2 The tanks have either one or two manhole shafts for ease of emptying (please check your order),

1.3 Consult your local authority as the installation may require Planning and Building Control approval. In the UK, you will need to be aware of publication DETR 3/99 (Welsh office 10/99) “Planning requirement in respect to use of non mains sewerage incorporating tanks in new development and building regulations H2”. In Ireland, circular letter SP/03 for the protection of groundwater. These documents require detailed site assessments.

1.4 The tanks are covered within the UK by H2 Building regulations 2000. A building inspector may wish to examine the site before, during or after tank installation and may require site of percolation test results.

1.5 In Ireland, Building regulations 1997, Technical guidance document H details the regulations.

1.6 Tanks shall be of adequate capacity, impermeable to liquids and adequately ventilated.

1.7 Tanks should be so sited and constructed that they are not prejudicial to the health of any person, will not contaminate any watercourse, underground water or water supply. They must have adequate means of access for maintenance and emptying.

1.8 Buildings which utilise such tanks should have a notice affixed within the building. This notice should advise the estimated emptying frequency and the need to use a licensed waste disposal contractor. The owner is legally responsible for ensuring that the system does not cause pollution, a health hazard or a nuisance.

1.9 These guidelines represent Best Practice for the installation of the above units. Many years of specialist experience has led to the successful installation of thousands of units it must be noted, however, that these Guidelines are necessarily of a general nature. It is the responsibility of others to verify that they are appropriate for the specific ground conditions and in-service loads of each installation. Similarly, a qualified specialist (e.g. Civil engineering consultant) must verify any information or advice given by employees or agents of the company regarding the design of an installation.

2.0 Handling & Storage

2.1 Care must be taken to ensure that units are not damaged during delivery and handling on site.

2.2 The design requirements of our products will frequently mean that the centre of gravity of the unit is “offset”. Care must therefore be taken to ensure that the unit is stable when lifting. Rainwater may also collect inside units, particularly if they have been stored on site prior to installation, adding weight and increasing instability. Check units before lifting and pump out any excess water.

2.3 When lifting units, use webbing slings of a suitable specification. DO NOT USE CHAINS.

2.4 A suitable spreader bar should be used to ensure that units are stable and that loads are evenly distributed during lifting. When lifting units, a spreader bar should be used where the slings would otherwise be at an angle > 30 degrees to the vertical.

2.5 Lifting equipment should be selected by considering the unit weight, length and the distance of lift required on site.

2.6 We accept no responsibility for the selection of lifting equipment.

2.7 Whenever units are stored or moved on site, ensure that the storage location is free of rock, debris and any sharp objects, which may damage the unit. The units must be placed on ground, which is flat and level to evenly support the base of the unit. Do not roll units. The unit has two stability feet at its base.

3.0 Site Planning

The following points should be considered before installation of the equipment:

3.1 The installation should have Planning and Building Control approval. See DETR 3/99 Planning requirement in respect to use of none-mains sewerage in new development and building regulations H2.

3.2 Position the unit at the maximum distance from habitation. Distances in excess of 15m are usually the minimum acceptable to the planners, but this varies depending on your local authority. The installation must be sited so as not to be prejudicial to health, nor to contaminate water supplies.

3.3 See BS EN 752-4 Drain & sewer systems outside Buildings.

3.4 Consider placing inspection points in the drain line before the units.

3.5 Tanks and treatment systems installed in series should be set with appropriate falls between them. Allow a minimum of 50mm, if not more. Connecting pipework should never run uphill.

3.6 Consider venting of the unit. Comply with local regulations. Larger tanks serving multiple properties should have a vent fitted to the neck to enable localized high-level venting.

3.7 Uncontaminated run off such as roof and surface water should be excluded from the unit to avoid over frequent filling. Separate drains must be provided for surface water which must NOT enter the unit.

3.8 Our tanks are structurally tested in accordance with EN 12566-1, which specifies structural stability testing for both wet and dry sites using granular backfill 3-8mm. However, in GB it would be typical for tanks to be installed in concrete due to rising water table, and it can generally be assumed that buoyancy prevention of concrete backfill is more advantageous than the granular backfill materials used in testing.

3.9 Ground conditions and water table level should be assessed. If the water table will be above the base of the unit at any time of the year, adequate concrete backfill must be provided to avoid flotation. In poorly draining ground, consideration should also be given to the likelihood of flotation due to surface water collecting in the backfill, and an appropriate installation method devised to avoid this.

3.10 Do not install the unit deeper than necessary. The maximum invert depth of the unit is shown on the relevant equipment drawing.

3.11 Sample/Inspection chambers may be required.

3.12 Adequate access to the unit must be provided for routine maintenance. Vehicles should not be permitted within a distance equal to the depth of the unit, unless suitable structural protection is provided to the installation.

3.13 There must be at least 1 meter of clear, level ground all around the access covers to allow for routine maintenance.

3.14 Provide electrical supply for alarm system. (If required)

3.15 Installation should only be carried out by suitably qualified and experienced contractors in accordance with current Health and Safety Regulations. Electrical work should be carried out by a qualified electrician, working to the latest edition of IEE.

3.16 Manhole covers and frames should suit the duty for the intended location.

4.0 Installation – General

4.1 When units are installed in unstable ground conditions where movement of the surrounding material and/or unit may occur, the connecting pipework should be designed to minimize the risk of damage from differential movement of the unit(s) and/or surrounding material.

4.2 The excavation must be deep enough to provide bedding and cover depth as determined by the type of surface pavement and loading. Asphalt and concrete pads should extend a minimum of 300mm horizontally beyond the unit in all directions.

4.3 In situations where the excavation will not maintain a vertical wall, it will be necessary to shore up the side walls of the excavation with suitable trench sheets and bracing systems to maintain a vertical wall from the bottom to the top of the excavation. DO NOT completely remove the shoring system until the backfilling is complete, but before the concrete fully hardens.

4.4 In areas where the water table is above the bottom of the excavation and/or the excavation is liable to flood, the excavation should be dewatered using suitable pumping equipment and this should continue until the installation is complete.

4.5 During installation care must be taken to ensure that the body of any unit is uniformly supported so that point loads through the unit are avoided.

4.6 The concrete Specification is a general specification. It is not a site-specific installation design.

GENERAL CONCRETE SPECIFICATION IN ACCORDANCE WITH BS EN 206-1 (BS 8500-1)		
TYPE OF MIX		(DC) DESIGN
PERMITTED TYPE OF CEMENT		BS 12 (OPC): BS 12 (RHPC): BS 4027 (SRPC)
PERMITTED TYPE OF AGGREGATE (coarse & fine)		BS 882
NOMINAL MAXIMUM SIZE OF AGGREGATE		20 mm
GRADES:	C25 /30 C25 /30 C16 /20	REINFORCED & ABOVE GROUND WITH HOLDING DOWN BOLTS REINFORCED (EG. FOR HIGH WATER TABLE) UNREINFORCED (NORMAL CONDITIONS)
MINIMUM CEMENT CONTENT	C30 C20	270 - 280 Kg/M^3 220 - 230 Kg/M^3
SLUMP CLASS		S1 (25mm)
RATE OF SAMPLING		READY MIX CONCRETE SHOULD BE SUPPLIED COMPLETE WITH APPROPRIATE DELIVERY TICKET IN ACCORDANCE WITH BS EN 12350-1
NOTE: STANDARD MIXES SHOULD NOT BE USED WHERE SULPHATES OR OTHER AGGRESSIVE CHEMICALS EXIST IN GROUND WATER		

5.0 Unit Installation

5.1 Excavate a hole of sufficient length and width to accommodate the tank and a minimum 150mm concrete surround and to a depth that allows for the burial depth of the unit plus concrete base slab of 300mm.

5.2 Construct a suitable concrete base slab appropriate to site conditions. Ensure that the slab is flat and level.

5.3 When the concrete base slab has set enough to support the installed load, install a 75mm deep level bed of C20 grade concrete. This will provide support for the tank and allow the tank to be levelled up when installed. Lower the unit onto the slab using suitable webbing slings and lifting equipment. The selection of lifting equipment is the responsibility of the installer considering unit weight, length, height and distance of lift.

5.4 Pour no more than 300mm depth of clean water into the unit, avoiding shock loads. DO NOT OVERFILL, the unit is not designed to hold water whilst unsupported.

5.5 Place concrete backfill to approximately 300mm depth under and to the sides of the tank ensuring good compaction to remove voids. Concrete backfill must be manually compacted; we DO NOT recommend the use of vibrating lances. Allow initial concrete set to occur before proceeding. Ensure concrete fills the voids underneath the tank and feet.

5.6 Continue adding concrete backfill, simultaneously keeping the internal water level no more than 300mm above the backfill level at all times, until the backfill is just below the underside of the Inlet drain, giving sufficient room to connect the inlet pipework.

5.7 Connect inlet drains and vent pipes when safe access to the backfill can be gained.

5.8 The inlet (110mmDia) should be extended to ground level.

5.9 The maximum recommended inlet invert is 1500mm.

5.10 Continue backfilling with concrete over the tank body to the required level. Build up a shell of concrete, minimum 150mm thick, around the access shaft(s), inlet pipe and alarm access tube (as applicable). Temporarily strut the access shaft to avoid distortion.

5.11 Do not install in trafficked areas unless a suitable top slab has been designed and constructed. The top slab should bear on a suitable foundation to prevent superimposed loads being transmitted to the unit and access shafts. Loads applied to covers and frames must bear on the top slab, not the access shaft.

5.12 Trafficked Areas, the tank should be installed at a suitable distance from any trafficked areas to prevent superimposed loading by vehicles.

5.13 The unit should be filled with clean water up to the invert level of the inlet pipe.

5.14 Leave until the concrete is fully cured. Tanks are now ready for use. Do not empty the tank until the concrete backfill has cured to an adequate strength (typically 1 - 2 days minimum).

5.15 Concrete back fill is recommended for backfilling the unit, but pea shingle or sand may be used on dry sites with relevant holding down strapping into the concrete base.

6.0 Operation

6.1 The unit should be filled with clean water up to the invert level of the inlet pipe.

6.2 Tanks are sized according to a population equivalent formula. Users should be aware that their waste enters a tank so that they can dispose of their waste considerately. Not everything is suitable for disposal into the tank, for example oils, fats and grease, medications should not be disposed of. We can provide User leaflets with more information for individual householders on request.

6.3 In addition, properties should display a notice within the building see section on notices.

7.0 Maintenance

7.1 Tanks accumulate & store solids and must be emptied periodically. The period between emptying depends upon the population served by the tank or, the amount of use to which the tank is put. Generally, the period is at least 6 months, however, tanks which are over utilized may require more frequent emptying.

7.2 All sludge should be removed when the unit is emptied. Solids should not be allowed to accumulate in more than half the tank.

7.3 The waste should be removed under the terms of The Waste Management Code of Practice. The Code imposes a duty of care on the waste producer to ensure that the cleansing contractor is registered with the Environment Agency and that the final disposal of the waste is to a licensed facility. Owners have a responsibility to use licensed waste contractors.

7.4 Covers should be replaced.

7.5 Our site engineers are available to carry out inspection, service and maintenance visits. We recommend regular maintenance contracts for units with complex operational or electrical requirements. A service to supervise tank emptying is also available. Contact details are provided on the cover sheet.

8.0 Warranty

Taken from ‘Kingspan’s Terms & Conditions of Sale’

The company will replace or, at its option, properly repair without charge any goods which are found to be defective and which cause failure in normal circumstances of use within a period of twelve months from the date of delivery.

This warranty is conditional upon:

(a) the Buyer notifying the Company of any claim within Seven days of the failure becoming discernible.
(b) the Company being allowed a reasonable opportunity to inspect the goods so as to confirm that they are defective.
(c) the goods not having been modified, mishandled or misused and being used strictly in accordance with any relevant instructions issued by the Company.

The Company’s liability under this Clause is limited to the repair or replacement of the defective goods, and does not cover costs of transport, installation or associated site costs, if applicable.

The Company’s liability to replace or repair the goods is in lieu of and excludes all other warranties and conditions, and in particular (but without limitation) the Company shall have no liability of any kind for consequential loss or damage.

For any further advice, please contact the Warranty department on 0844 225 2785

A Warranty Form is included in this package, to register your unit for Warranty. Please complete ALL sections of the Form and return it at your earliest convenience.

Also within this package are Notices, describing the necessary maintenance of the plant in use. This should be fixed within the building.

NOTICES:



CESS POOL/SILAGE TANK

KINGSPAN CESSPOOL/SILAGE

The foul drainage from this property is served by a Cesspool/Silage Tank.

The system should be emptied when full by a licensed contractor and inspected fortnightly for overflow.

THE OWNER OF THE PROPERTY IS LEGALLY RESPONSIBLE FOR ENSURING

THAT THE SYSTEM DOES NOT CAUSE POLLUTION, A HEALTH HAZARD OR A

NUISANCE.

We recommend that a separate log is kept of all service visits, the log should detail the date and any action taken, e.g., Emptying volume and frequency.

This notice should be fixed by the owner within the building alerting current and future owners to the maintenance requirement.

(Building regulation H2 (1.57)

Please contact Kingspan Water & Energy Services on +44 (0) 844 846 0500 to arrange a maintenance service or to request replacement operating instructions.

RAINWATER MANAGEMENT

SDS WaterBank® GWR System

Grey Water On Demand System (Large Scale)

SDS WaterBank® GWR (LS) is a fully automated recycling system which is designed to deliver a consistent supply of treated grey water to best meet a larger development's required daily volume.

SDS WaterBank® GWR operates on a fast treatment principle to meet demand quickly and reduce the need for large water storage tanks. It is ideal for large installations but where space is at a premium, and for combined grey water and rainwater recycling systems.

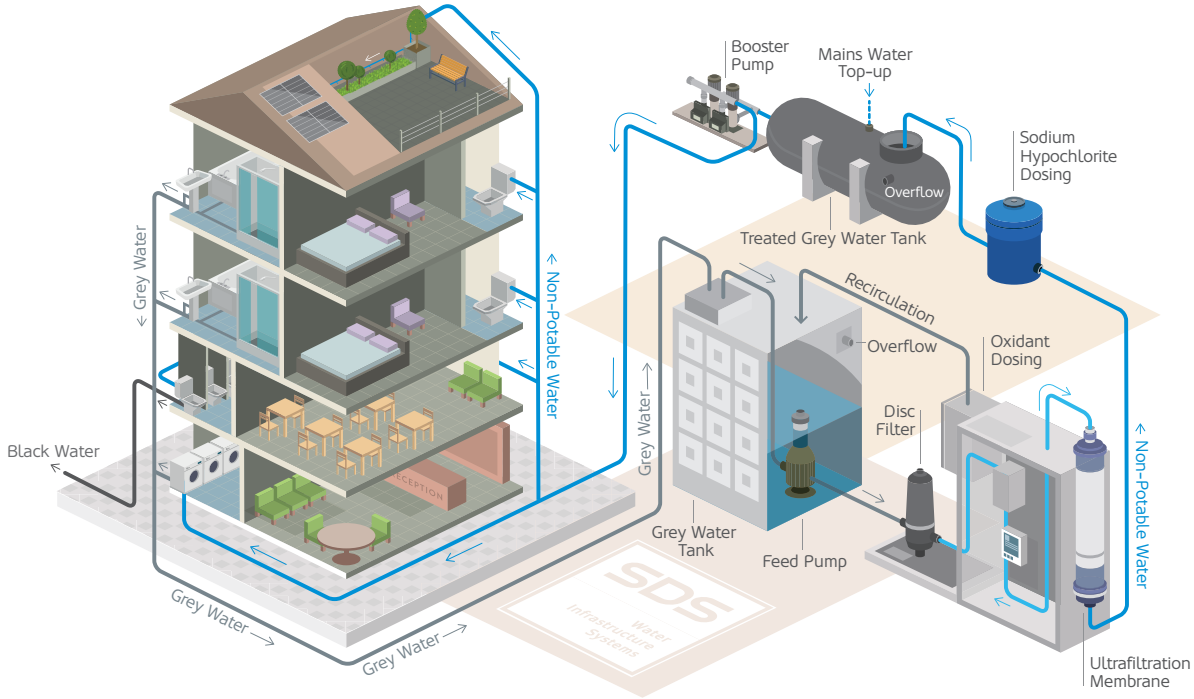

- Max production flow up to 12m³/hour
- Automated function
- Adaptable to varying grey water supply and demand volumes
- Mains water back-up (on treated water tank)
- Includes distribution pumping
- Volt-free BMS output capability
- Smart design including capacity for IoT-ready interface
- Complies with BS8525 requirements

SDS WaterBank® GWR (LS) uses a 2-stage treatment of disc filtration to 100 microns, followed by a hollow fibre ultrafiltration membrane to 0.05 microns.

Both stages incorporate an automatic backwash process to ensure the highest level of water quality, which is further enhanced and maintained by the carefully controlled dosing of low-level chlorine.

sdsinfrastructure.com

SDS Limited, Clearwater House, Castlemills, Biddisham, Somerset BS26 2RE

T: +44 (0)1934 751303

E: info@sdsinfrastructure.com

Features	Benefits
Reduced storage needs compared to MBR systems.	Ideal for builds with spatial restrictions in the plant room.
Compatible with above- or below- ground tank installations.	Suitable for use in all building types (subject to max distances).
Various tank sizes and shapes available.	Provides maximum flexibility of application.
Recommended for partnering with SDS-supplied water tanks.	A back-up mains water supply in the treated water tank ensures seamless water delivery. SDS supplies and installs the complete system.
Conforms to BS and Water Supplies (Water Fittings) Regulations (when partnered with SDS-supplied tanks).	Provides legislative compliance.
High efficiency disc filtration removes all grey water particulates >100 microns.	Extends Ultrafiltration Membrane life, whilst allowing high treatment rates.
Integral pressure monitoring and self-clean cycle.	Ensures system operation is maintained at maximum efficiency and is uninterrupted between service visits.
Intelligent chlorine dosing of both collection tank and supplied water.	Ensures treated grey water is maintained in a sanitary condition obviating the need for further UV treatment.
Variable speed pump standard.	Specified bespoke to each application.
Water meter and remote production monitoring as standard.	Provides client access 24/7 to accurate information on grey water production, mains water usage and savings.
Variable time control for operation and automatic shut-down.	Perfect for variable demand situations and shut-down periods such as over weekends and holidays. System does not require rebooting or recommissioning following shut-down.
Standardised start-up and shut-down procedure.	Suitable for periods when usage demand is low e.g. Christmas and holidays.
Includes capacity for IoT / real time control via GSM signal.	Link to a SDS SYMBiotIC™ web-based client portal provides viewing of operating data and reports.

SYMBiotIC™

SPECIFICATIONS	GWR LS2	GWR LS5	GWR LS9
Maximum flow rate (m^3/hour)	2	5	9
Motor output (kW)	6.5	7.9	13.5
Power	1 x 3 phase 400v, 32A		
Width* (mm)	1500	1700	1700
Height* (mm)	2400	2400	2400
Length* (mm)	2500	3200	4500
Grey water inlet connection	1" (adjustable)	1 1/4" (adjustable)	1 1/2" (adjustable)
Outlet connection	1" (adjustable)	1 1/4" (adjustable)	1 1/2" (adjustable)
Overflow connection	1" (adjustable)		
Remote monitoring	GSM production monitoring via SDS SYMBiotIC™ (optional extra)		
Noise	95dbl @ 1 metre (1 min/hour) (option to reduce to 45db)		
Chemical additive	Sodium hypochlorite		

*Excludes clearances, exact dimensions provided on order

SDS WATER

sdsinfrastructure.com

SDS Limited, Clearwater House, Castlemills, Biddisham, Somerset BS26 2RE

T: +44 (0)1934 751303
E: info@sdsinfrastructure.com

PREMIER TECH

INSTALLATION & SERVICING GUIDE

REWATEC™

Solido Smart +P



Installation & Servicing Guide

Rewatec™ Solido SMART +P, 3000L to 9900L

Phosphorus Removal Wastewater Treatment Plant

BS EN 12566-3.

Manual Version OM0033 Rev 3

(DOKK5110F)

Created On: 21 Sept 2022



Installers: To Safeguard Warranty Please Ensure You Are Using The Latest Installation Manual

⚠ **This manual is designed for use by experienced sewage treatment tank installers & service providers. If you are not a professional installer you can obtain training from Premier Tech. (see below)**

- Premier Tech are proud to warrant the workmanship and components of the tank for the time period shown in this manual.
- Installers, commissioning agents and service providers must ensure they adhere to the installation guidelines and allow for site specific environmental conditions.

Premier Tech Water & Environment provide full training for installers and servicing agents.

For more information see:

https://www.premiertechaqua.com/en-gb/preferred-installer-programme

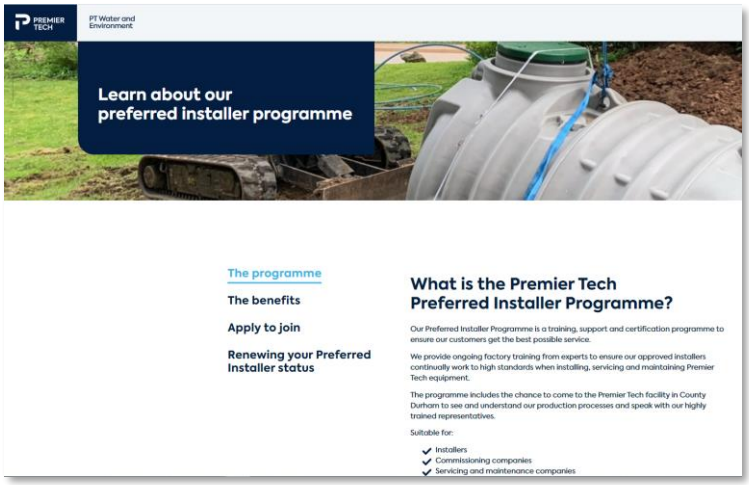

PREMIER TECH
PT Water and Environment UK
+44 (0) 191 587 8650
sales.ptwe.uk@premiertech.com
PT-WaterEnvironment.co.uk

Installation & Commissioning Checklist

Property Owners Name:

Property Address:

City: County: Postcode: Tel:

Installation Agents Name:

Installation Agents Address:

City: County: Postcode: Tel:

Date Installation Carried Out:

TANK MODEL:

TANK SERIAL NUMBER:

This document constitutes guidance only – it is the responsibility of the installing agent to ensure the wastewater treatment plant is installed correctly, fully functional & operating as intended. For assistance please contact Premier Tech Water & Environment 0191 587 8650 / sales.ptwe.uk@premiertech.com

- ☐ 1 Health & Safety

Hyperlinked Document

- ☐ 2 Rewatec Solido Smart Overview
- ☐ 3 Tank Handling
- ☐ 4 Offloading Inspection
- ☐ 5 Assessing Ground Conditions
- ☐ 6 Locating Tank & Hole Excavation
- ☐ 7 Backfilling
- ☐ 8 Connections & Assembly Pumped & Gravity Versions
- ☐ 9 Control Panel Guide
- ☐ 10 Start-Up & Commissioning Procedure

- ☐ Servicing & Maintenance Guide
- ☐ Sludge Removal

Health & Safety

The Solido SMART +P should be installed by qualified personnel only.

You must read these warnings carefully before installing or using the equipment. Should the equipment be transferred to a new owner, always ensure that all relevant documents are supplied.

Observe all hazard labels and take appropriate action to avoid exposure to the risks indicated.

Take care to maintain correct posture, particularly when lifting. Use appropriate lifting equipment when necessary.

- Only experienced contractors should carry out installation, following the guidelines.
- The unit should have a Pre-Service Agreement Inspection by a competent engineer.
- A qualified electrician should carry out electrical work.
- Covers must be kept locked.
- Observe all hazard labels and take appropriate action to avoid exposure to the risks indicated.

Clothing

- We recommend the use of a dust mask and gloves when cutting components.
- Any person carrying out maintenance on the equipment should wear suitable protective clothing, including gloves.

Working Area

- Ensure that the working area is adequately lit.
- Ensure that you are familiar with safe working areas and accesses.
- Use only the designated access walkways. Do not walk on the cover or deep well safety mesh(es).
- Ensure proper footing and balance at all times.
- Avoid any sharp edges.

Desludging

- Desludging should be carried out by a licensed waste disposal contractor holding the relevant permits to transport and dispose of sewage sludge.
- The contractor must refer to the desludge instructions in the Operating Handbook, a copy of the instructions is fastened under the covers.

Maintenance and Inspection Procedures

- Should you wish to inspect the operation of the equipment, please observe all necessary precautions, including those listed below, which apply to maintenance procedures.
- The power supply to the equipment must be isolated at the control panel(s) before lifting the covers.
- If the equipment has to run with the covers off , all care must be taken to avoid contact with moving parts and electrical components or conductors.
- Drive guards must be replaced and secured if removed during maintenance.
- Once power has been isolated, the control panel must be kept locked shut to avoid accidental re-connection whilst work or inspection is being carried out.

Electrical Components

- The electrical components must be connected, started up, and opened only by qualified authorised personnel. The power cord must be protected with a 30 mA residual-current circuit breaker.
- The technology capsule must be opened ONLY by a specialist company and ONLY when the power is switched off.



Warning: irritating / corrosive
Irritating to eyes and skin.

- The plant contains chemical agents, please avoid contact and wear suitable protective equipment.
- When handling, use only containers and fittings made of inert plastic.
- Disturbances in the treatment capacity of the plant is not expected when the chemical is in contact with the plant's mixed liquor.

Disclaimer: This document constitutes installation and inspection guidance only – it is the responsibility of the installation company to ensure the wastewater treatment plant is fully functional & operating as intended.

Rewatec Solido SMART +P Overview

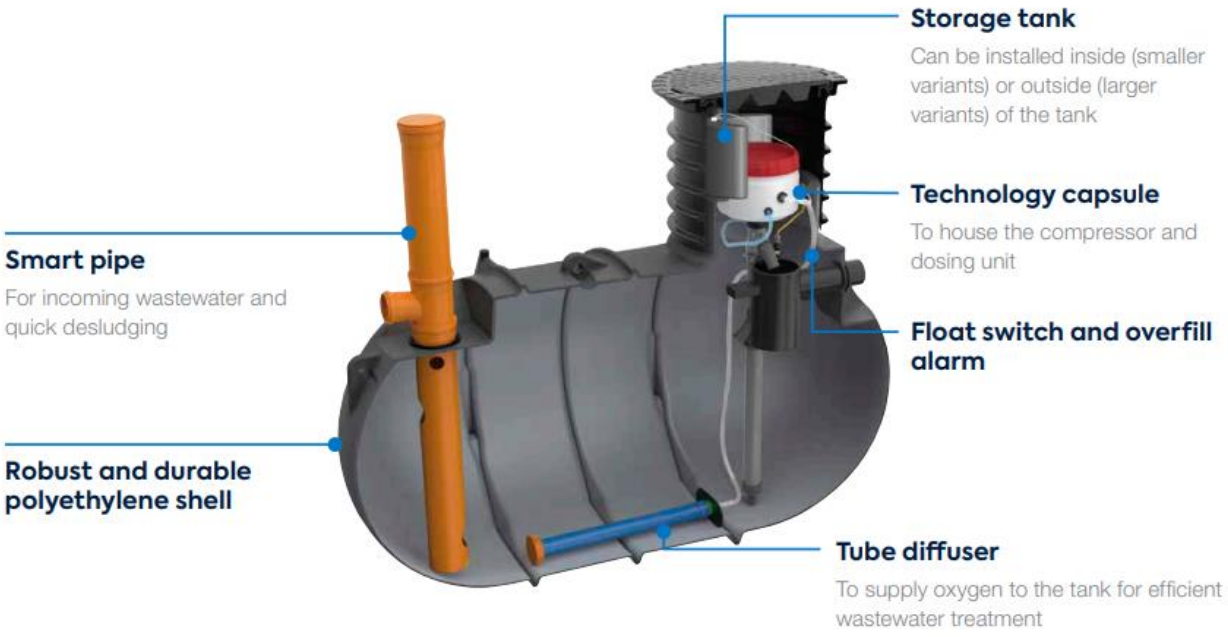

TECHNICAL SPECIFICATIONS (REWATEC SOLIDO SMART +P)

PE	Chamber	Outlet	Length (mm)	Width (mm)	Height min-max (mm)
6	Single	Gravity/pump	2,420	1,420	2,470-2,570*
9	Single	Gravity/pump	2,420	1,700	2,750-2,850*
12	Single	Gravity/pump	2,400	2,010	2,625-3,035*
15	Single	Gravity/pump	2,765	2,310	2,915-3,350*
25	Single	Gravity/pump	3,400	2,310	2,915-3,350*
An external polyethylene pump station is required for the pump outlet.					

*Minimum height is as standard, maximum height corresponds to the maximum manway extension

25 YEAR WARRANTY

Shell Warranty – 25 Years*
Technology & Pump Warranty – 3 Years*
Design Life – 50 Years*

*Only when regular servicing schedule adhered to.

Tank Handling

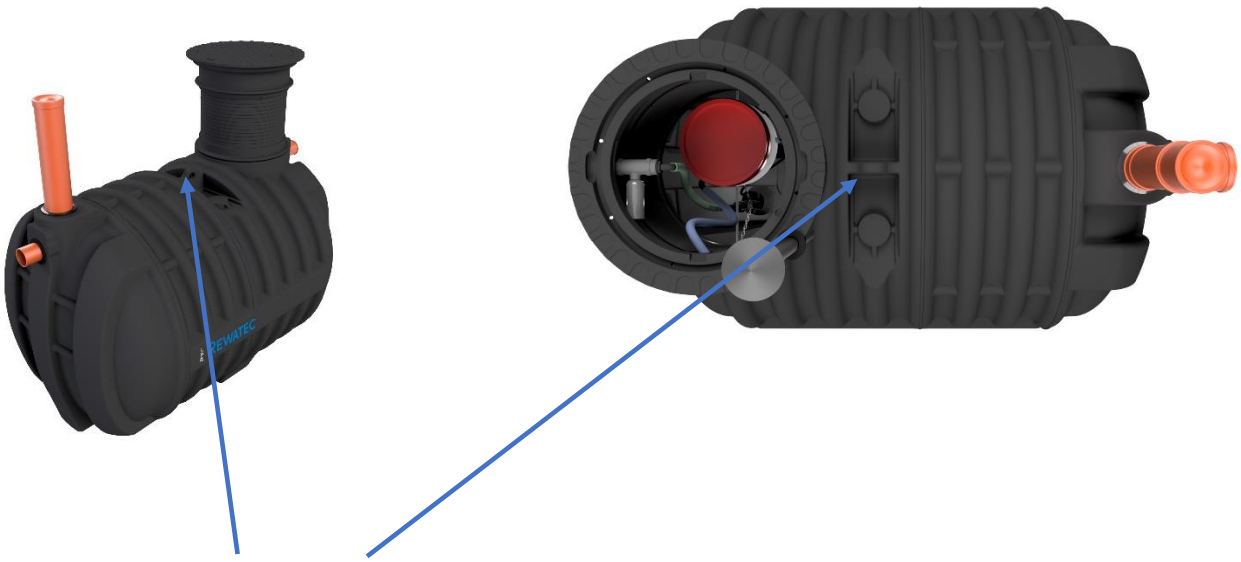

- ☐ Use lifting point only.
- ☐ Connect a webbed sling to the lifting point. (Do NOT use any other item such as rope or chain)
- ☐ Lift using a suitable mechanical device such as a crane or digger.
- ☐ Take care not to damage the tank



Images for representation only

Offloading Inspection

- ☐ Check tank for signs of transit damage.
- ☐ Ensure below items are present

Solido +P Components

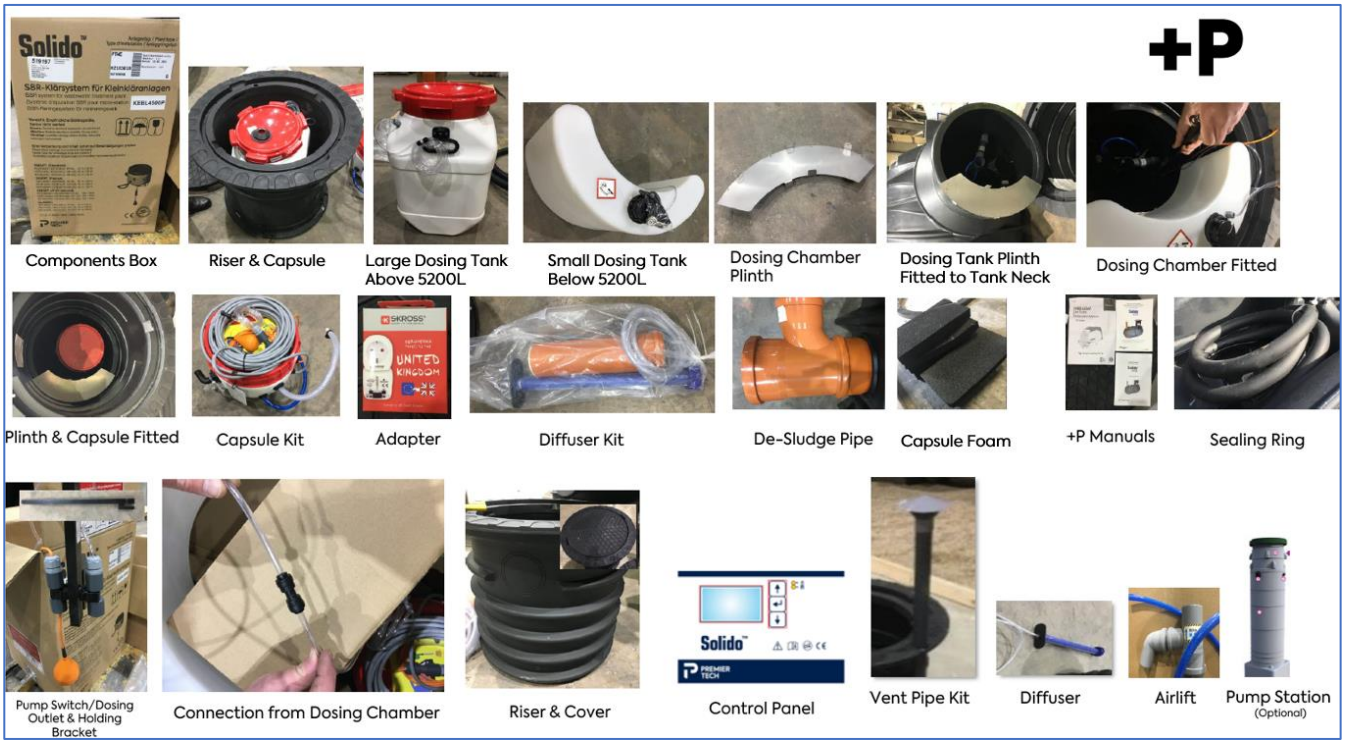

Inside Capsule

Dosing Pump



Blower



Dosing Hose



Optional externally located pump station



4500 and 5200L Tanks come with Internal Dosing Chamber

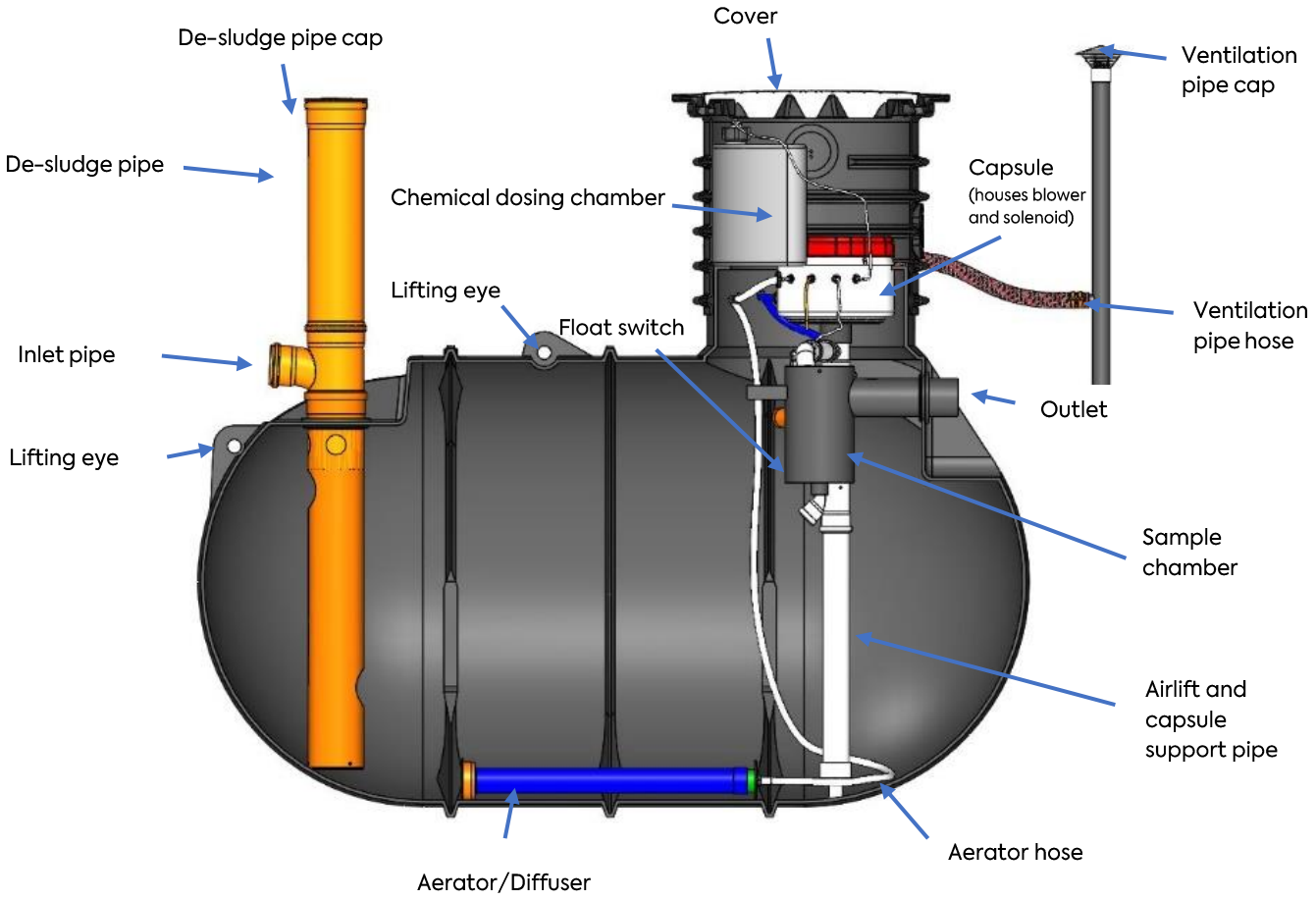

7600 and 9900L Tanks come with External Dosing Chamber

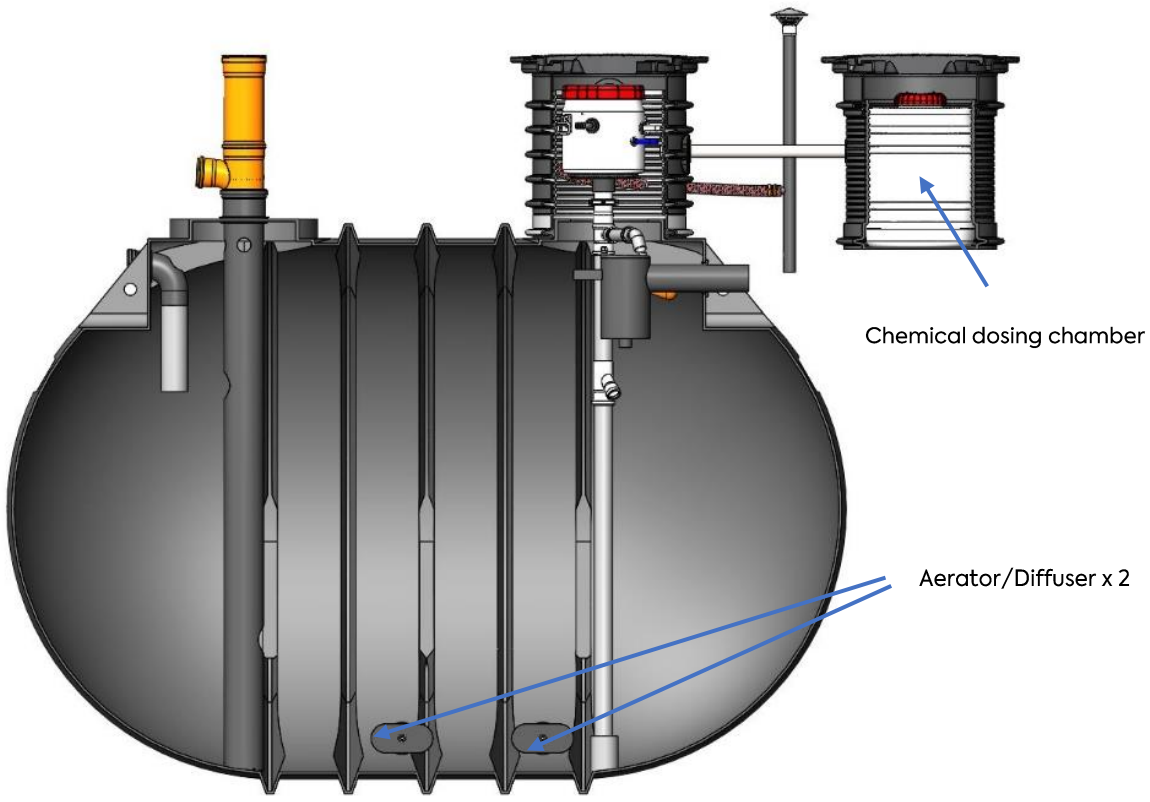

How It Works

A chemical precipitant is dosed directly to the mixed liquor to reduce the phosphate concentration that accumulated in the incoming wastewater. Dosing is time-controlled using a timer and a peristaltic pump> the dose takes place at the end of the aeration cycle for optimal results.

The overall annual recommended dosage (pre-set) is approx. 5 litres per the nominally connected resident (PE).

Dimension Drawings

Solido Smart +P Gravity 3000L (KEBL3000P / 394275)

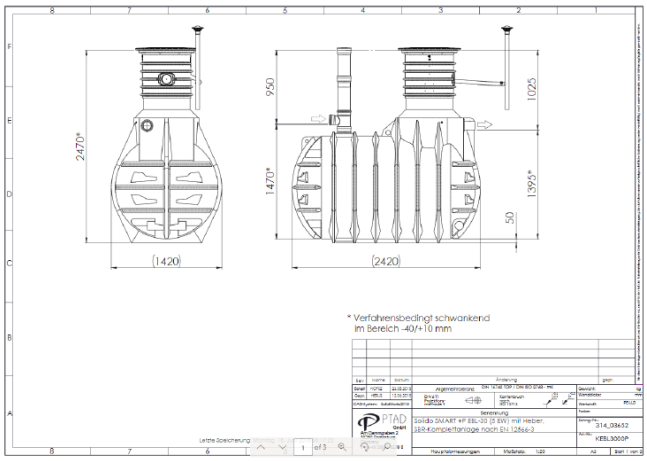

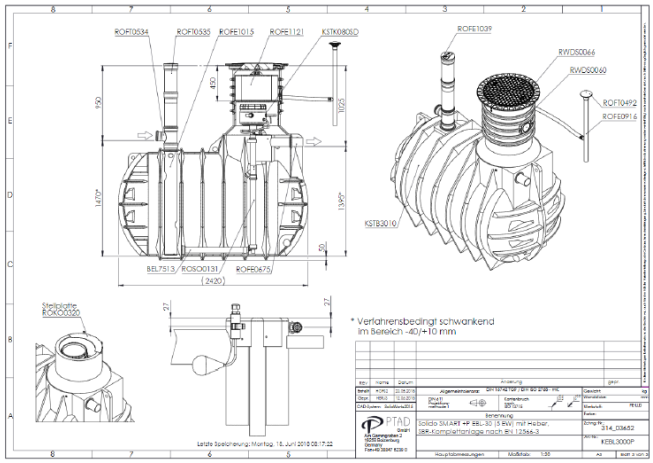

Solido Smart +P Gravity 4500L (KEBL4500P / 394276)

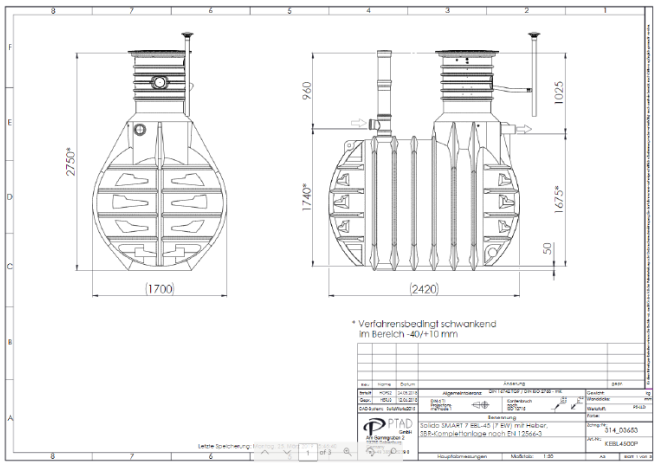

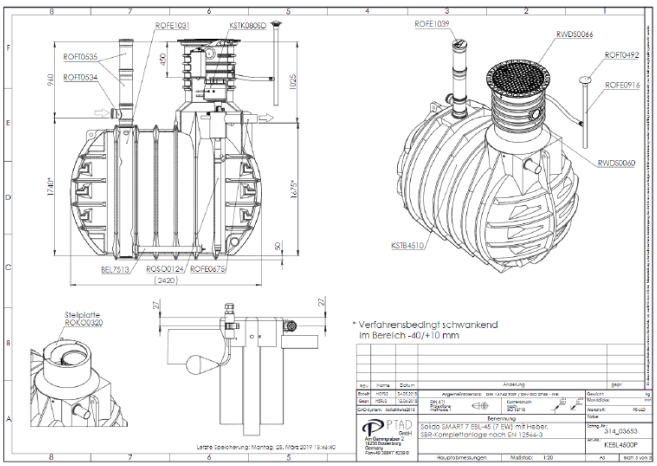

Solido Smart +P Gravity 5200L (KEBL5200P / 394277)

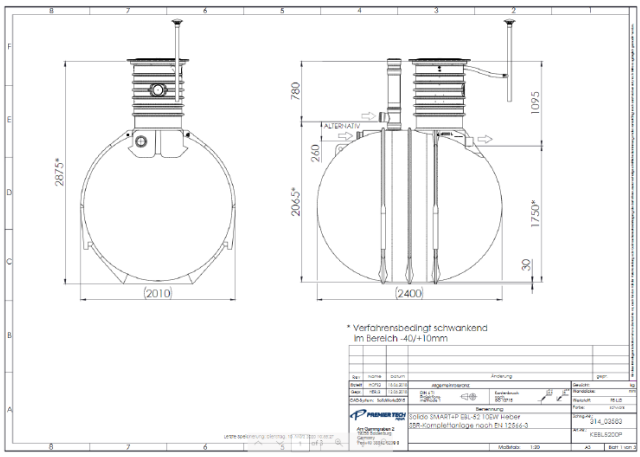

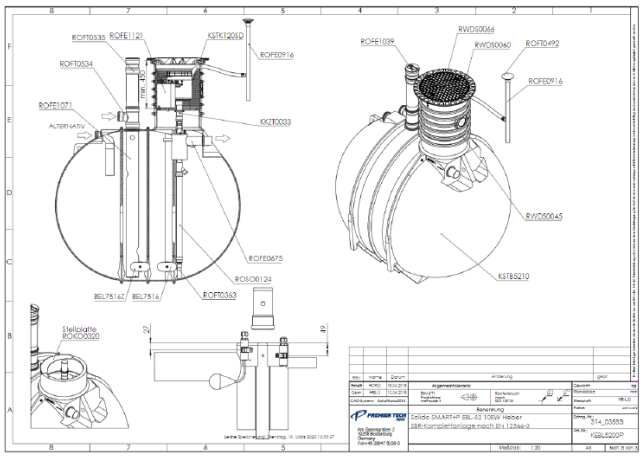

Solido Smart +P Gravity 7600L (KEBL7600P / 394278)

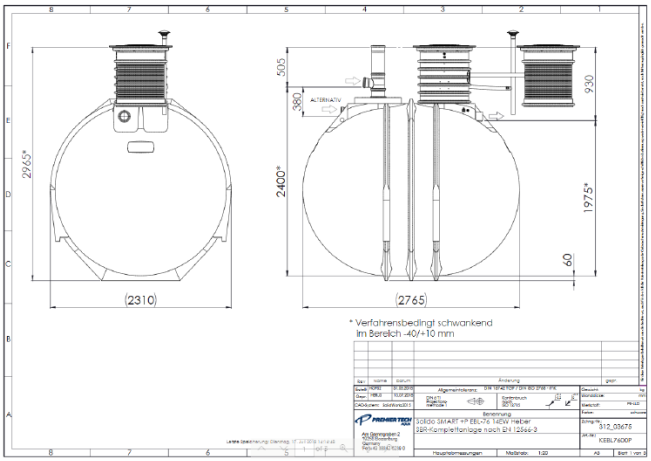

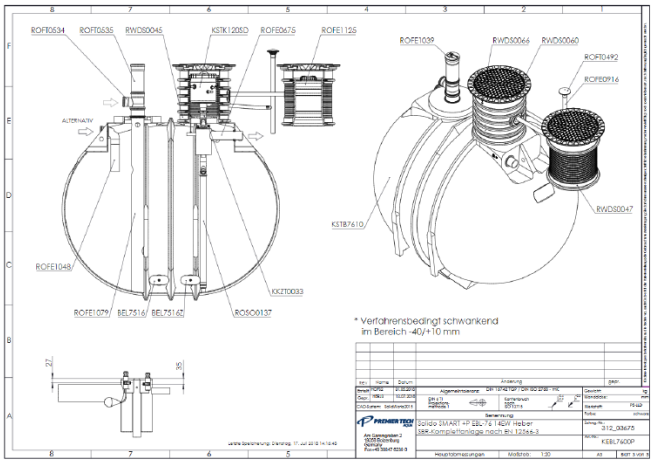

Solido Smart +P Gravity 9900L (KEBL9900P / 394279)

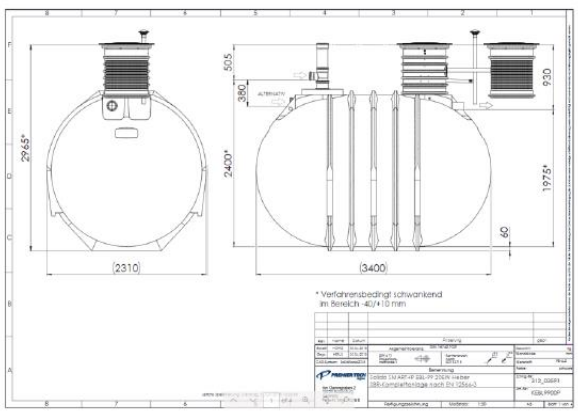

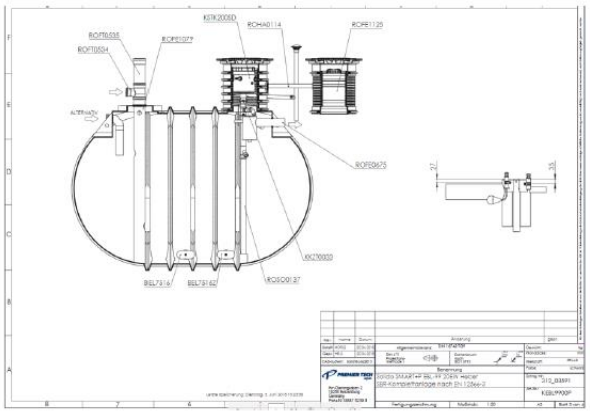

Assessing Ground Conditions

Ground conditions dictate whether the tank should be installed in pea gravel or concrete. A high-water table requires concrete installation, a low water table requires pea gravel installation.

Incorrect assessment of ground conditions can negatively impact the installation. Please ensure you read the below information.

Changing weather patterns in the UK mean that regions or areas that may have been relatively dry, may now be subjected to heavy and sporadic rainfall events.

Signs of a High-Water Table

- ☐ Low permeability in soil (i.e., high clay content)
- ☐ Visible water table during excavation of the hole
- ☐ Naturally wet area
- ☐ Low lying or flat land
- ☐ Installation in a natural depression of the land
- ☐ Areas of low drainage or standing water
- ☐ Areas where water could congregate even if the land is currently dry

Signs of a Low-Water Table

- ☐ Absence of water during excavation
- ☐ When installing on a hilltop or hillside location
- ☐ Dry excavation even during wet weather
- ☐ High permeability soil

Installation in Periodic High-Water Table Conditions

If the ground water table could be above the turret (shoulder of the tank) height of the tank for a short period of time (defined as hours rather than days) a watertight connection between the tank and shaft system should be installed using a factory-provided welded joint (if considered necessary).

In such conditions, installation in concrete is recommended.

Installation in High-Water Table Conditions

If the water table is at risk of being higher than the turret (shoulder) of the tank for a prolonged period (defined as days rather than hours) installation in concrete is recommended.

Hillside Situations

If the soil of the area is subjected to movement the tank will be need to be secured with a supporting structure (e.g., a wall).

Installation in Permanently Low-Water Table Conditions

The water table below the turret (shoulder of the tank). Where the water table is below the turret of the tank, installation in pea gravel is recommended.

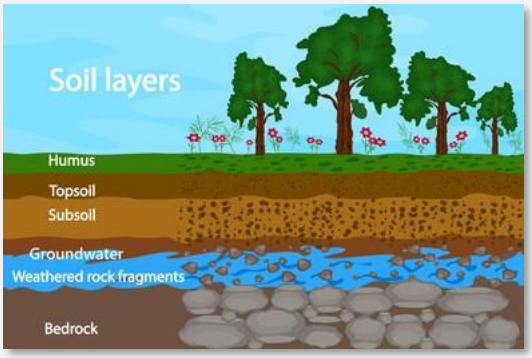

Backfilling

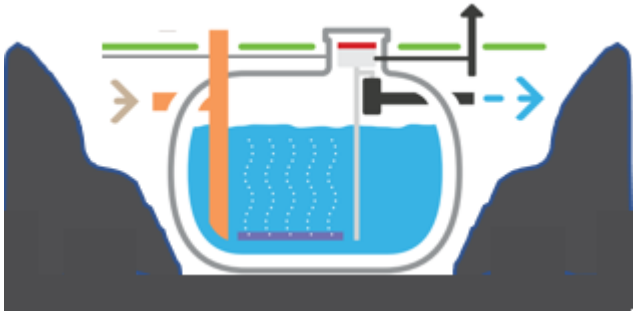

After ensuring the tank is correctly positioned and perfectly flat in a bed of gravel.

- Fill the tank with water up to approximately 300mm then backfill to the same height with pea gravel or concrete depending upon your ground water conditions. (SEE BELOW FOR DETAILS ON WHEN TO USE PEA GRAVEL OR CONCRETE)
- Add 300mm more water then backfill again to approximately the same level as the water.
- Repeat this process until tank is completely backfilled with water up to the level of the pump and pea gravel until the body of the tank is completely covered.
- Above this level, top-soil or excavated material can be used.

Failure to do this creates uneven interior/exterior loads and could damage the tank shell.

Low Water Table – Pea Gravel



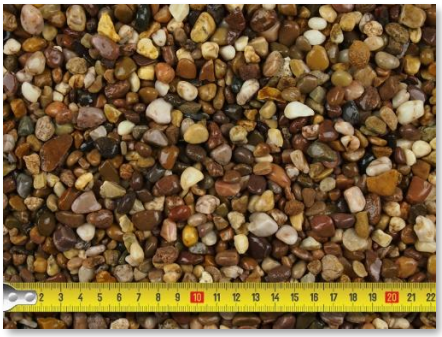

Use pea gravel when installing in low water-table conditions.

The filling material around the tank must be compactable, permeable, and free of sharp objects. Round Gravel - Grain size between 5-16 mm. (alternatively 12-16 mm or 8-12 mm).

Soil, clay or "filler sand" **do not** meet these criteria.

The backfill material should reach at least of 250mm between the tank and the edge of the excavated hole.

High Water Table - Concrete





Use concrete when installing in high water-table conditions.

Ensure the tank is correctly positioned and perfectly flat in a bed of concrete. Use a spirit level to achieve this.

The thickness of the concrete should be at least 250mm between the tank and the excavated hole.

Fill the tank with 300mm of water, then backfill to the same height with concrete and repeat until the body of the tank is completely covered.

Failure to do this creates uneven interior/exterior loads and could damage the tank shell.

Locating the Tank & Hole Excavation

If you are in any doubt about any aspect of the installation, please contact Premier Tech.

Tank Positioning Next to Buildings

The excavation hole must be located a suitable distance away from buildings (Please check Building Regulations Part H).

For tanks that are required to be located on driveways or where traffic is expected to pass a steel cover and a strengthened manway is required. Available from Premier Tech as an option.



- Ensure there are no sub-surface obstacles such as pipes, cables or tree roots.
- Ensure depth is sufficient for the tank to be located plus there is sufficient space for surface top-soil.
- Ensure the space between the tank and the edges of the excavated hole are at least 250mm.
- Ensure the tank height and positioning is such that the influent pipe runs downwards towards the tank from the property and the effluent discharge pipe runs in the desired direction towards the discharge point.
- Place a layer of gravel on the base of the excavated hole.
- Ensure the tank is perfectly flat in the ground using a spirit level.



- The soil coverage required above the tank (standard max. 1,50 meter, depend also on the traffic loads). The soil coverage should not be more than 1.2m from the top of the tank (1.5 from the IL), otherwise maintenance of the sewage treatment systems cannot not be carried out.

1. Positioning the Tank.

Ensure the tank height and positioning is such that the influent pipe runs downwards towards the tank from the property and the effluent discharge pipe runs in the desired direction towards the discharge point.

Ensure the discharge point will not be liable to flooding.



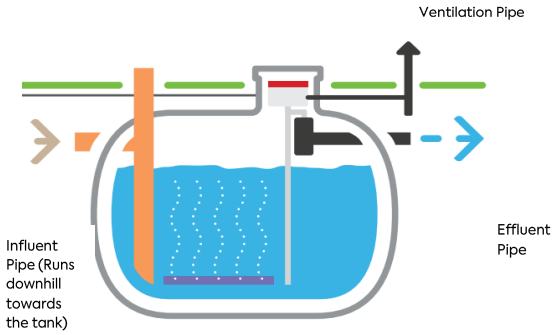

2. The Tank Turret

Can be cut down on-site <u>if necessary,</u> to achieve the appropriate tank depth for the install. Use the horizontal mould lines to assist with this.





Tool Required: Angle grinder/circular saw or similar.

3. Locate the Control Unit

The control unit should be located up to a maximum of 30m from the tank. Either indoors or inside an optional control panel kiosk. The control panel should <u>not</u> be positioned in direct sunlight or where weather can reach it. Ensure the electricity supply is reliable. If it is not, use a UPS generator or similar.

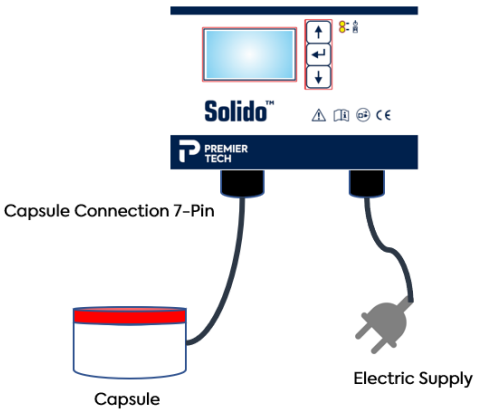

4. Lay the Control Panel Cable

Pull the control cable of the capsule through a duct and route it to the chosen location of the control panel.



Control Panel Cable

- Attach a wire to the end of the cable so that the cable can be pulled out of the conduit.
- Ensure the cable duct is positioned in a suitable location (ie Away from standing water, grass cutting equipment, traffic etc)
- Never disassemble the cable plug.
- Protect the plug from moisture.

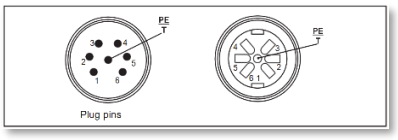

View of 7-Pin Socket
For Tank Connection



Ensure a suitable cable duct is used.

5. Installing The Capsule & Components

Connect the pre-fitted hose on the grey lifter pipe located inside the tank (narrow blue hose) to the narrow blue hose coming out of the capsule.



Connect the clear braided hose attached to the diffuser's hose to the clear braided hose coming out of the capsule.



Place diffuser on the tank floor (centralised)

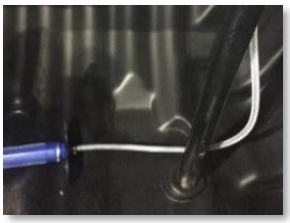

Connect the ventilation hose (connected to the ventilation pipe) to the black elbow joint attached to the side of the capsule.



Carefully place the technology capsule onto the top of the grey pipe (airlift) inside the tank so that the capsule is positioned securely.



Loosely bundle the hoses using a cable tie and place them around the capsule.

Lock the orange float switch in place on the pre-assembled retaining clip for the sampling pot in the tank.



Ensure hose pipe is clipped into manway using clip provided. This provides support for the hose. Use bolts and washers to achieve this.

Fit the capsule cable into the control panel.

If an extended electrical cable is required, ensure the connection is covered with heat shrink.



Image for Demonstration Purposes Only – Connect Hoses In-Situ

Fit the dosing hose to the pump inside the capsule

Dosing hose, PE, 4x6mm, transparent
for precipitants with

Dosing element (pressure side, pre-assembled on the technology capsule)





Suction side Pressure side

6. Positioning Chemical Dosing Tank 4500L and 5200L Only

Tank for precipitant, approx. 21 liters, with a pre-assembled dosing hose, suction filter with weight (suction side)

Storage tank positioning plate (base), screws, nuts and washers included

For systems with a VS60 shaft, insert the mounting plate with the tabs facing down between the edge of the container and the shaft.

Fix with screws if necessary.



For systems with an intermediate ring, fix the setting plate to the intermediate ring with the screws (tabs pointing upwards).

If necessary, fix it to the container with screws.

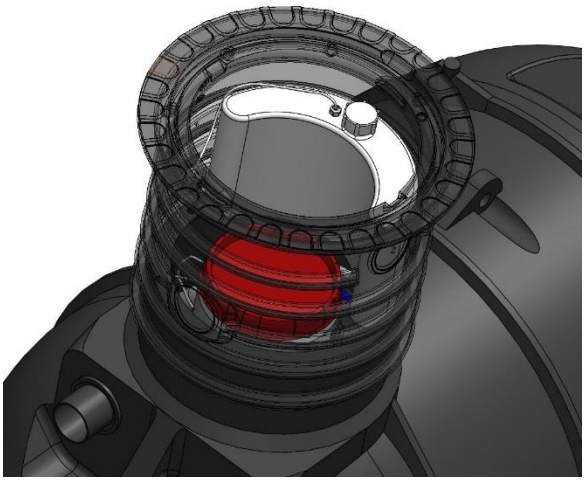

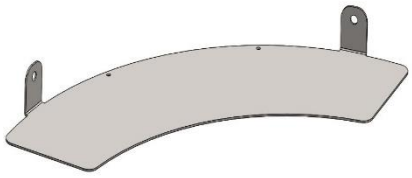

Affix plate to manway





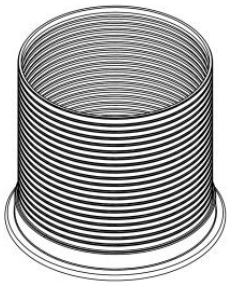

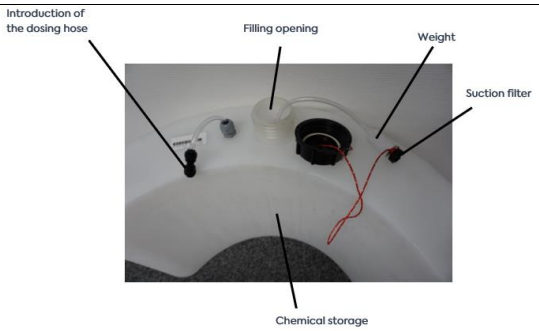

Only by specialist company:
Fill the precipitant tank.





Observe hazard warnings

Place the precipitant tank on the setting plate and secure it with the belt loops and the carabiner to the eye bolt in the shaft.





7. Positioning Chemical Dosing Tank 7600L and 9900L Only

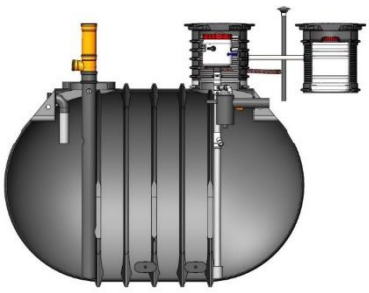

Precipitant tank, approx. 66 litres, with pre-assembled dosing hose, suction filter with weight (suction side)



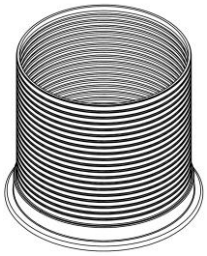

Level in the precipitant tank:
10cm corresponds to approx. 13-14L

The tank is to be positioned in a covered encasement next to the main-tank (encasement provided)

Only by specialist company:

Fill the precipitant tank.



Observe hazard warnings

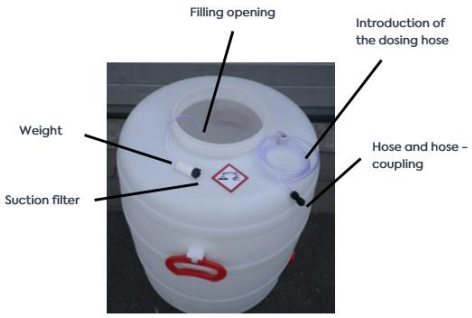

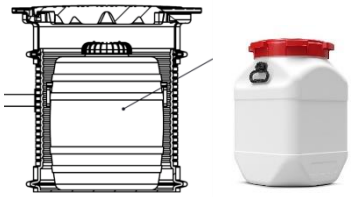

8. Removable holder for overfill alarm SWS and dosing element Length 97 cm





Click the dosing element and the overfill detector into the retaining clips on the removable receptacle.

Use the left side for the float switch (high level alarm)

Dosing element on this side

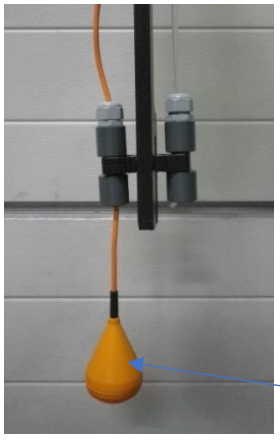

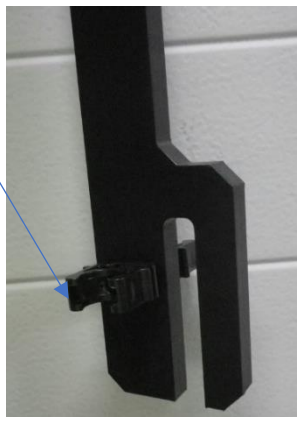

Float switch on the other side

Place the removable receptacle with the dosing element and overfill indicator on the edge of the sampling pot.



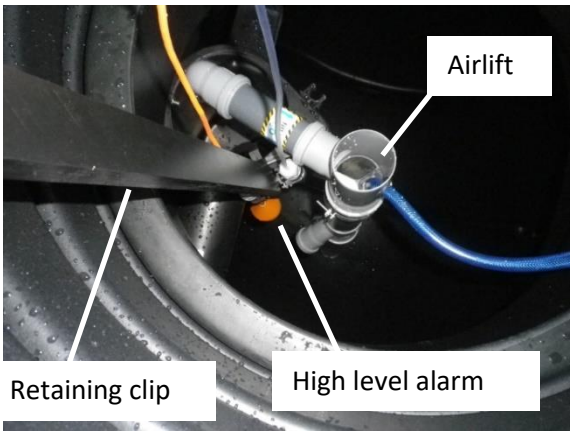

9. Positioning Manway onto Turret

Position rubber seal onto turret - make sure the rubber ring is well-positioned in the groove of the manway. No major force is required if the rubber seal is positioned correctly into the groove



Position manway onto turret and press down until seal is created and manway is level



10. Drilling Manway Holes & Fitting Pipes/Cables

Tool Required: Circular cutter drill bits



○ **Ventilation pipe hose**

Ensure there is a water-tight seal between the ventilation hose and the manway.

○ **Electrical cable from capsule**





NOTE – Ensure holes drilled into the turret for pipes and cabling are completely water- tight. If you have any questions regarding how to do this please contact premier tech.

NOTE - To ensure air hose pipes do not kink, cut down hose lengths where required. For example, if you have excess pipe from the pump to the pump hose outlet, cut the hose down in size to prevent kinking.



11. Ventilation Pipe Installation

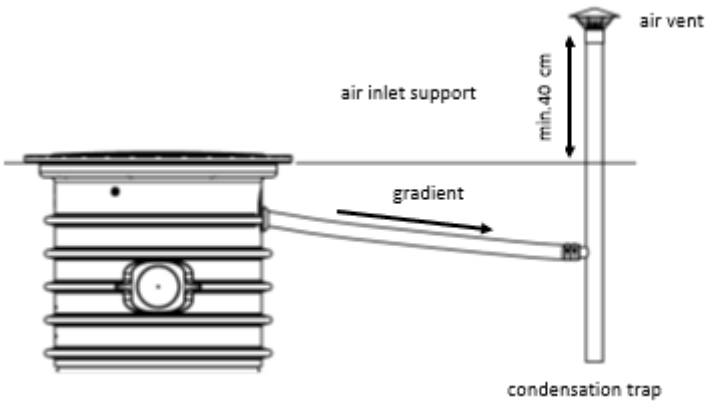

12. Optional Pumped Version (externally located)

Suspend the pump onto the threaded metal rods using the hooks located on the chain.

Attach the chain hooks into the turret as below. Position the hooks so they are easily accessible as high up in the turret as the chain length allows.

In the case that the effluent has to reach to a static head that the airlift cannot support, the product would have to be supported by our small-footprint pump station.

The pump station is made of polyethylene and is of a 500mm diameter. The pump (Top2 Vortex) is able to deliver the effluent volume and is enabled by an integrated float switch. The pipework is made of PVC and is of 1 '' cable gland outlet (threaded, DN25) and a 32mm of pump connection inlet.

The function of the pump is only regulated by the float and no timers is included.

See pictures below with the corresponding legends.



From left to right: Overall view of the pump station; top lid of the pump station with the corresponding extension(s); view of the TOP Vortex pump with the integrated float switch






From left to right: Detail of the float switch; pipework connection (outlet); generic plan view showing the position of the pump; top of the pump station showing the outlet pipe outside the vessel

13. Check the Complete Installation

Check the full installation:

- Tank location
- Ground conditions including inlet/outlet pipes
- Backfill is stable
- Control panel location is accessible
- Connections all completed
- Electric supply is reliable

14. Perform Start-Up

Once everything is connected, switch on the panel and configure the plant. Perform a test run to assess the electro-mechanical components.

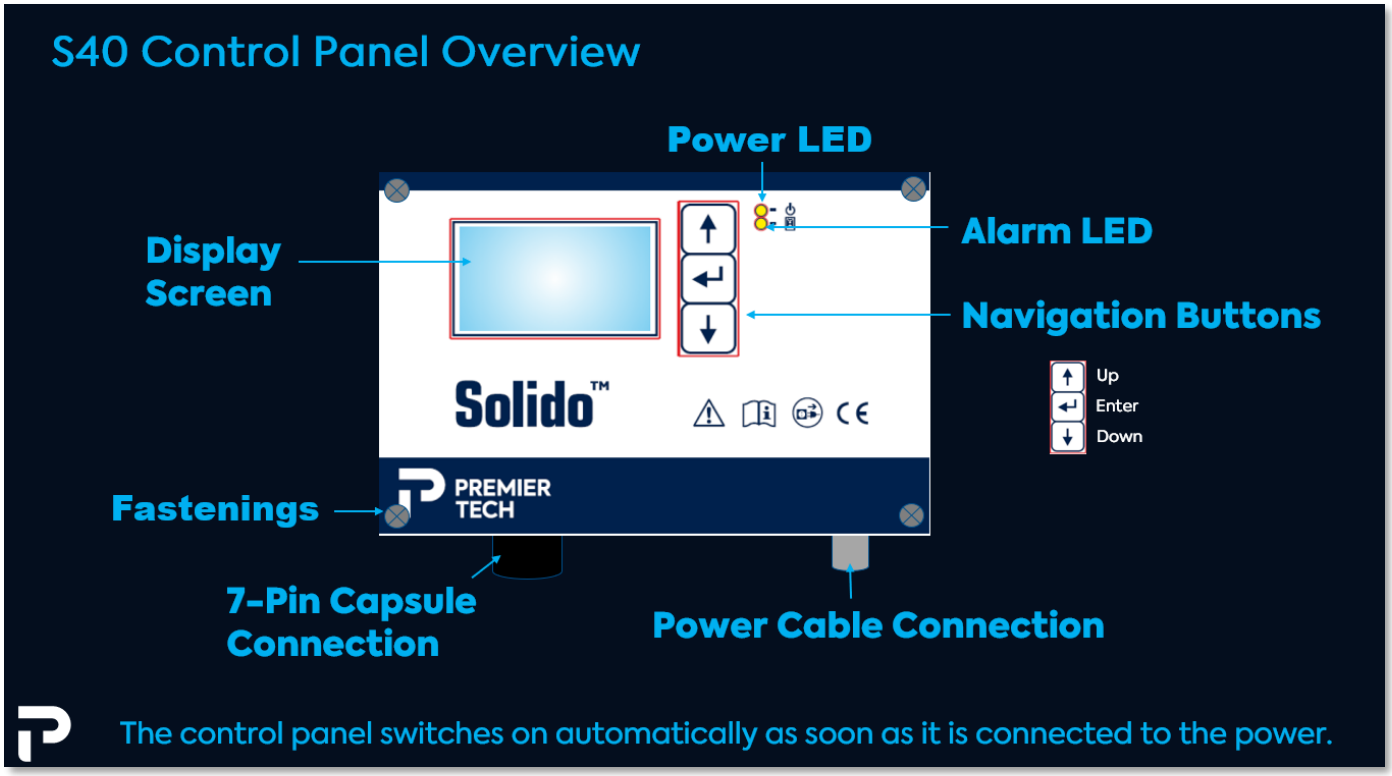

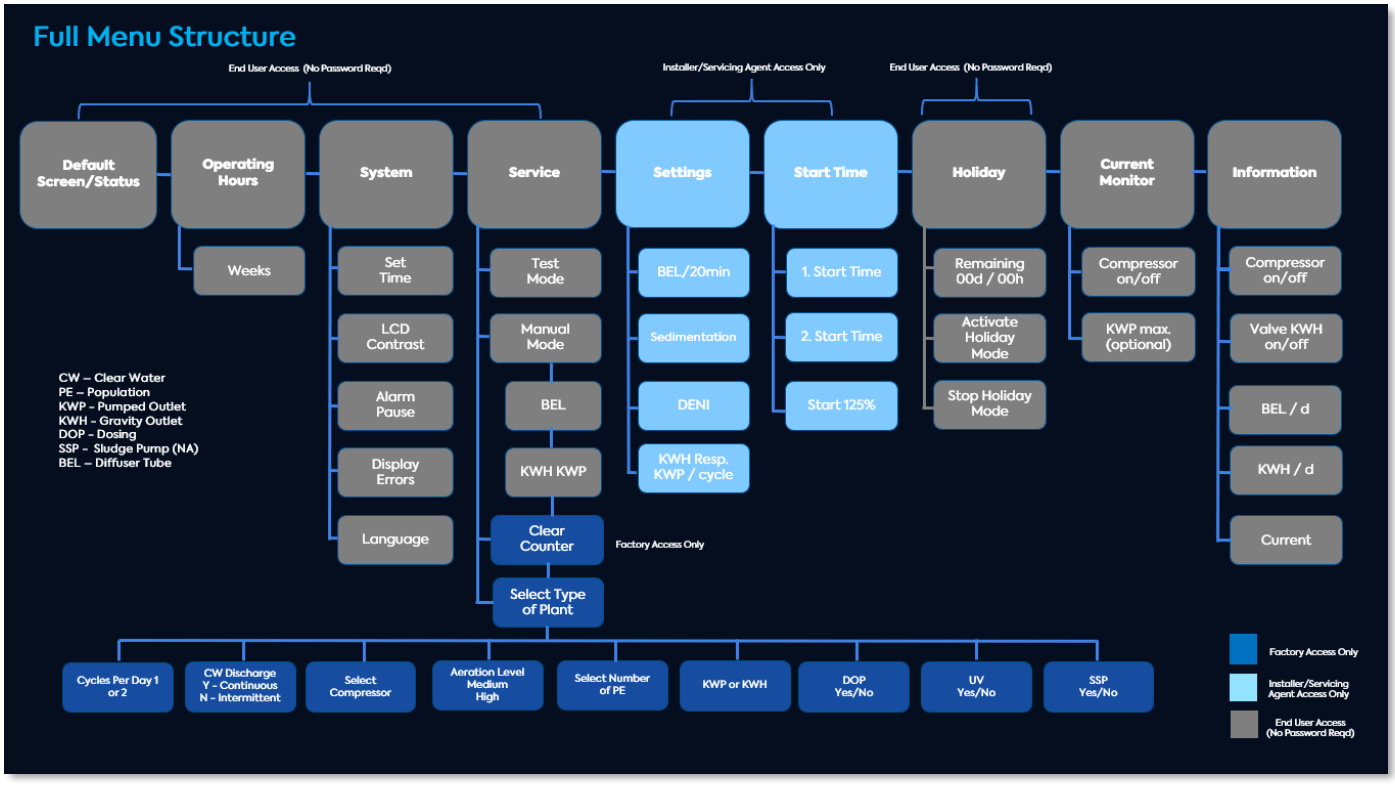

Control Panel Password

The control panel requires a code to access the system. This is a safety feature to discourage access by end users. Contact Premier Tech for the password.



The initial setup code is 7682 (First-time use only)



+44 (0) 191 587 8650
sales.ptwe.uk@premiertech.com
PT-WaterEnvironment.co.uk

First Start Up (1/3)



Up
Enter
Down

- On first start up panel shows **'Sprache Deutsch'**
- Press down to English – Press Enter.
- Set date and time using up down and enter.
- Enter Password **7682** using down and enter.
- Screen shows **Solido Smart Yes** press enter.
- Screen shows **Cycles Per Day 2** press enter.

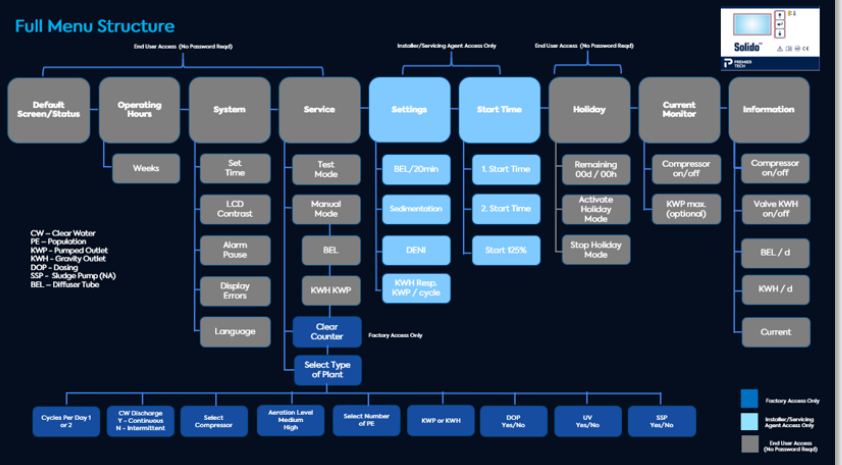

Abb.	Meaning
KKA	Wastewater treatment plant
SBR	Sequencing batch reactor
BEL	Tube diffuser
KWH	Clearwater lifter
SWS	Float switch
DOP	Dosing for Phosphorus Removal

First Start Up (2/3)

Up
Enter
Down

- Screen shows **Continuous CW Discharge Yes** press enter (press NO only if you have a downstream process, i.e. slow infiltration bed, Ecoflo, reed bed or similar)
- Screen shows **Select Compressor select correct option for your compressor type** press enter.
- Screen shows **Solido Smart C** press enter.
- Screen shows **Number of PE** – using up and down select the number of persons in the property. Press enter.
- Screen shows **KWP – Press enter for pumped outlet tanks. For gravity outlet tanks, press down it will show 'No', press enter.**
- **Where a pumped outlet tank is being installed – determine the distance from the tank to the effluent discharge. If the install requires pumped outlet more than 25m then access KWP and increase pumping time to 20 minutes.**

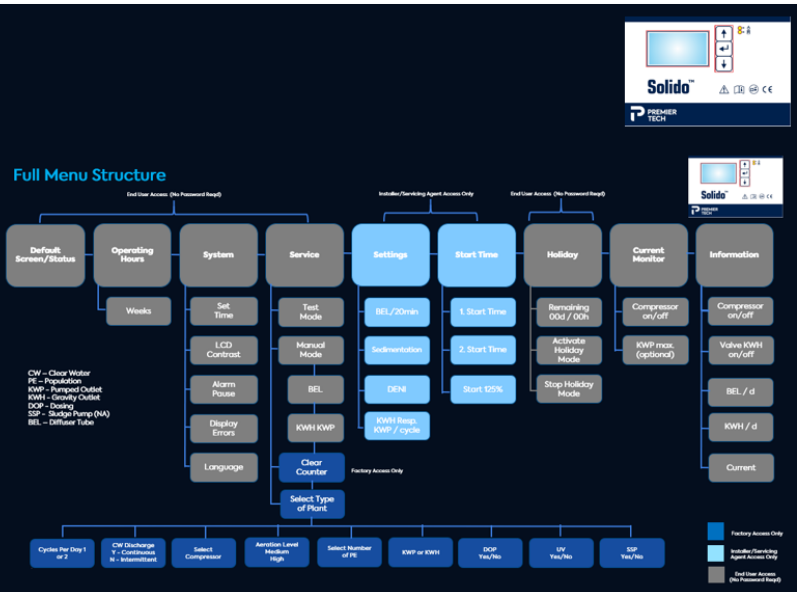

First Start Up (3/3)

Up
Enter
Down

- **Test mode will begin Do Not press any key if you want to run in test mode.**
- **It takes a few minutes to run the test mode depending upon the specification of tank.**
- If the system runs without showing errors and does not alarm, then press the Enter Button.
- Screen shows **'Were inputs Ok'** press down till Yes then press Enter. The system will start. (If No is entered the system will reboot to initial settings then reconfigure from the start).
- If you want to temporarily silence the alarm press the Enter once. If you press the Enter again the alarm will reset but will continue until fault is rectified.

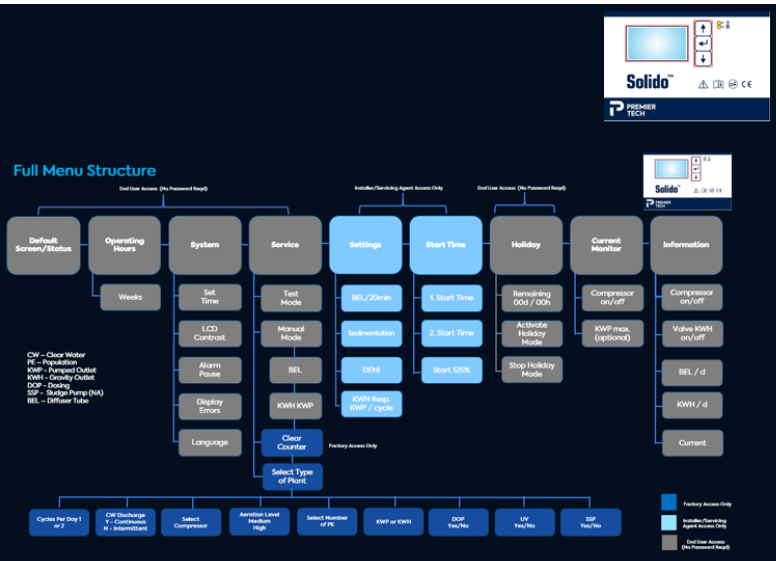

In some models, during setup, extra options may appear (depending on manufacturing date)

Aeration: Medium / High (press high)

DOP: Yes / No (Only press yes if installing a +P Phosphorus removal tank)

UV: Yes / No (press No)

SSP: Yes / No (press No)

Rebooting to Factory Settings



Up
Enter
Down

- Navigate to 'Clear Counter'
- Press Enter
- Contact Premier Tech for password and Enter
- Press Down until on the Start Time screen.
- Press Enter
- On Start Time screen press Down until on Reset – press Enter
- It will show Are You Sure press Down till shows Yes – press Enter
- System will reboot to factory settings.



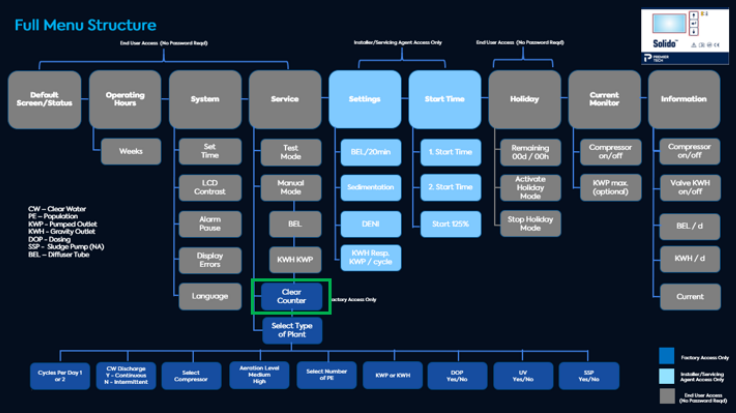

Changing The Set Volume Flow Of The Dosing Pump

Note:
- **Standard setting 42 ml / min (default during dosing)**
- **If a deviating value is determined during maintenance, *please enter this in the control.***

Volume flow of the pump

Standard value (pre-assigned) for SEKO PE-3:
42 ml / min

Note: if the distance between the precipitant tank and the pump is greater, an % increase in liters is necessary to compnsate for the losses.

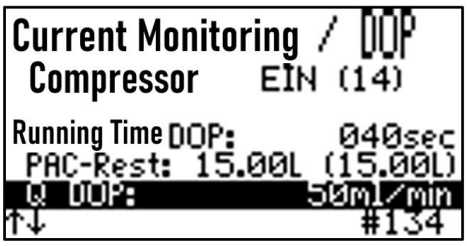

Press the middle button again and then enter the service password.

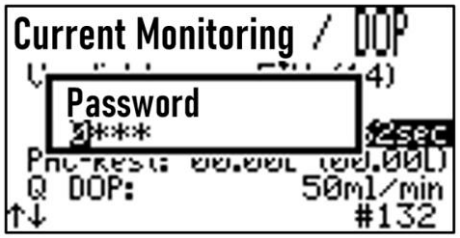



Enter the desired value,
confirm with the middle button.

Adjustable max. 80ml / min



The new value is saved.

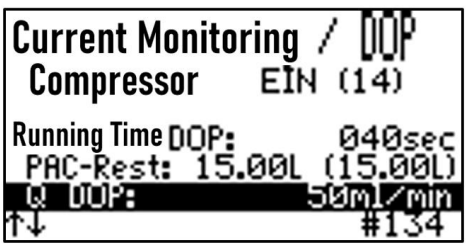

Changing The Running Time Of The Dosing Pump

To optimize the cleaning performance of the system, it may be necessary to adjust the running time of the dosing pump (as part of maintenance).

Go to the menu item
Current monitoring / DOP

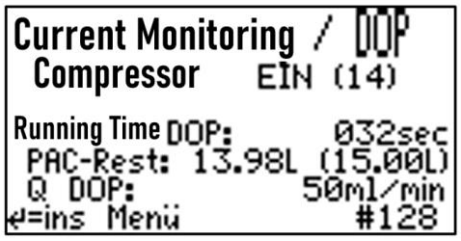

And scroll to the line, Term DOP

This is the running time of the dosing pump
in sec per cycle

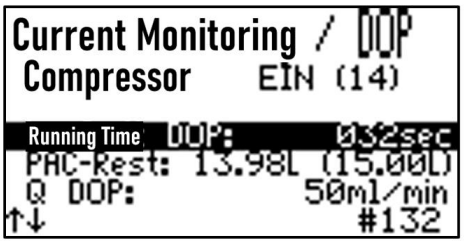

Press the middle button again and then enter
the service password.

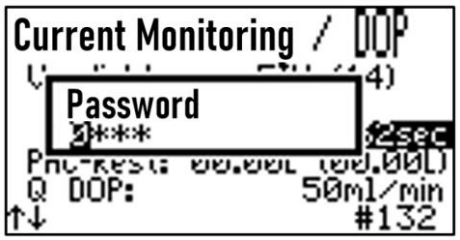

Enter the desired value,
confirm with the middle button.

Adjustable: 0-240s



1. Start-Up & Commissioning Procedure

1. Is the control unit located no more than 30 m from the treatment plant and protected from rain and sun? ☐

2. Is a 230 V power supply plug with a 30 mA residual-current circuit breaker available? Is the protective earth conductor functioning? ☐

3. Is the treatment tank installed according to the installation manual? ☐

4. Is the sludge removal pipe installed in accordance with the installation instructions including extension and cap? ☐

5. Are the seals from the shaft assembly set for the air supply hose and cable conduit set in place? Is the cable holder installed? For pumped version, is the outlet installed? ☐

6. Is the hose pulled into the shaft up to the red marking? (Standard hose length 3m, extension up to 10m possible, max. 300mm deep into the ground) ☐

7. Is the diffuser pipe installed in the centre of and horizontally on the tank floor? ☐

8. Are the lifters filled with water to prevent them from being lifted? (Not applicable to pumped version) ☐

9. Check the inlet pipe from the house is connected and the outlet pipe is connected to the downstream pipework. ☐

10. Make sure ventilation is sufficient as described in this manual ☐

11. A wire is attached to the end of the cable so that the cable can be pulled out of the conduit in future if required. ☐

12. Fill the tank with clean water up to the level of the pump. ☐

13. Ensure the pump is hanging both on the threaded stainless-steel rods as well as on the chain hooks positioned in the turret. ☐

Servicing Guide for Professionals



Servicing & Maintenance



Ensuring the sewage treatment plant is regularly maintained is necessary to ensure the operational efficiency of the tank and to limit the possibility of any faults occurring.

■ Servicing

This should be conducted by a professional wastewater treatment servicing agent as a matter of course at least once a year. Failure to do this could impact the performance of the wastewater treatment plant and void the warranty.

De-Sludging

The design of the de-sludge pipe ensures that at 10% of the volume of contents will stay inside the tank. This is required to ensure ongoing biological operation.

De-Sludge using the de-sludge pipe only

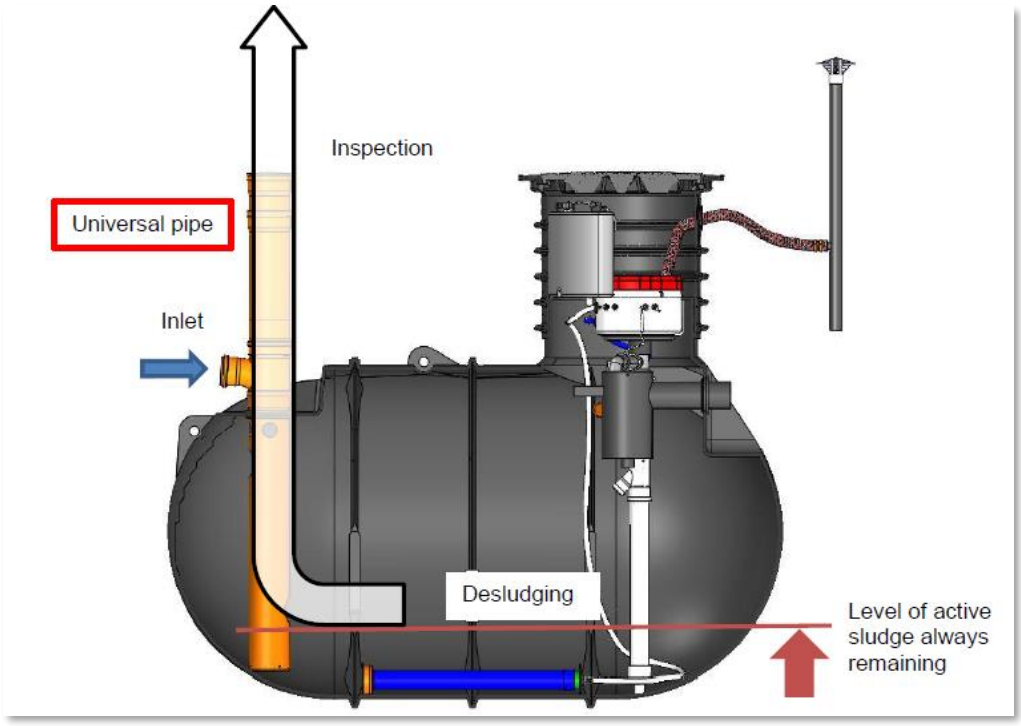

- Desludging is required if the sludge level reaches 70% of the max. permitted.
- If the sludge volume fraction is lower than that, then an annual desludging is the maximum acceptable period for solids' accumulation.
- Your service provider should carry out this test by using two volumetric cylinders, one empty and one half full of water.
- You must check whether the functions of the calmed inlet, aeration devices, and clearwater lifter are impacted by damaging substances (i.e fats, rugs, inert solids). Substances that are damaging to functions should be removed each time that maintenance is performed.
- During desludging, you must ensure that airlift and aeration devices are not damaged, the plant is not in the middle of the sedimentation phase whenever possible, and that at least 10% of the sludge quantity remains in the container (inlet pipe has a corresponding opening to allow for the specific volume).

Assessing Activated Sludge Volume In The Reactor (SSV30)

- measure **water level** in the reactor (**after aeration, ideally around 11.30 am**
- aerate reactor per manual mode for 2min when tank is full, evaluate mixing
- take **250 ml sample of mixed activated sludge** and fill into 1000 ml cylinder
- fill up with **750 ml of clearwater** from sample pot to reach "1+3 dilution"
- allow **settlement for 30min**
- **multiply resulting sludge level by factor 4** to get **SSV30 in ml/l**
- take **picture** and save it as part of maintenance report

Why dilute 1+3?

Example after 30min sedimentation:

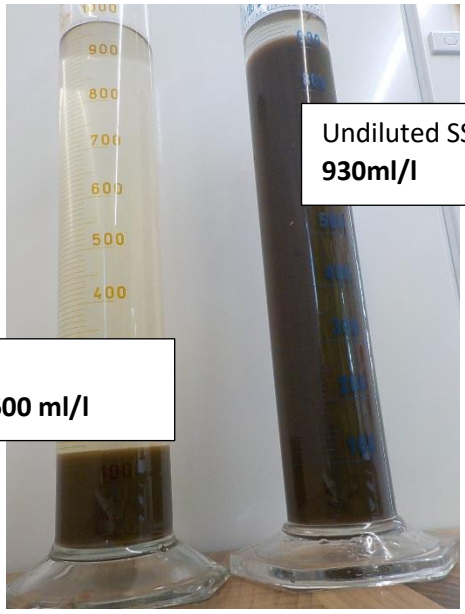

The result of **600ml/l** is much closer to the real conditions in the tank.

9.3.Evaluation of Sludge Level SSV90norm and Desludging

For proper evaluation of $SSV90_{norm}$ sludge level calculate according to this formula:

$$SSV90_{norm} = 0,95 \times SSV30 \times HR / HRmax$$

$SSV90_{norm}$	true sludge level in reactor after 90min of sedimentation normalized / standardized to HRmax
0,95	factor for conversion of SSV30 to SSV90 (30 resp.90 min sedimentation)
SSV30:	measurement of sludge level in reactor in 1+3 dilution after 30min sedimentation at current water level HR during service
HR:	current water level at service
HRmax:	max. reg. water level at full hydraulic load (see table below)



Desludging is required when **$SSV90_{norm}$ = 700 ml/l**

EXAMPLE

- Type: EM2-35 (tank type)
- HR at service: 1,16 m
- HRmax according to table: 1,28 m
- level in cylinder (30min): 130 ml (1+3)
  (250ml sample+750ml clearwater)
- SSV30 = 520 ml/l *(4x130)*
- $SSV90_{norm}$
  = 0,95 x 520 x (1,16 / 1,28) ml/l
  = 448 ml/l

➔ **$SSV90_{norm}$ = 448 ml/l**
➔ **around 2/3 of total sludge storage volume capacity is currently filled**

Table of max.regular water level at full hydraulic load HRmax:

Plant type	**PE**	**HRmax**	Height tank bottom to edge of manhole as refernce for on-site measurement
EBL-26	5 PE	**0,92 m**	1,57 m
EBL-30	5 PE	**1,12 m**	1,96 m
EBL-45	8 PE	**1,35 m**	2,24 m
EBL-52	10 PE	**1,54 m**	2,21 m
EBL-76	15 PE	**1,68 m**	2,28 m
EBL-99	20 PE	**1,81 m**	2,28 m
EBL-76X2	30 PE	**1,71 m**	2,28 m
EBL-99X2	40 PE	**1,81 m**	2,28 m
EBL-99X3	50 PE	**1,85 m**	2,28 m

Special Notes On Maintenance Of The Dosing Mechanism

This paragraph highlights the maintenance needs for the dosing equipment. This work is to be carried out by an experience service company only that knows the hazards from handling corrosive chemicals.

Precipitants



Warning: irritating / corrosive, Irritating to eyes and skin.

Avoid contact and wear suitable protective equipment.

Use only containers and fittings made of plastic.

There is no expected hazard when the chemical agent is dispensed into the mixed liquor.

Tools Required (Only By Professional Service Company)

- A dipstick made of plastic to be used for the measurement of the level in the precipitant tank
- Funnel and hose to be used for the refill of the precipitant tank

Suction Filter In The Precipitant Tank (only by professional service company)

Check the suction filter in the precipitant tank for deposits or blockages. Clean if necessary.

Level of Precipitant (only by professional service company)

As part of maintenance, the actual fill level in the precipitant tank must be compared with the "theoretical" fill level displayed on the control (PAC rest).

Fill level (large canister): 10cm corresponds to approx. 13–14L

In the event of significant deviations, the cause must be clarified (see likely scenarios below)

Possible causes:	**Inspect:**
The flow rate of the pump is not set correctly.	Measure the volume flow of the pump and adjust the settings on the control if necessary
Blockage at the dosing hose or dosing pump	Check the pump, hose and suction filter and clean if necessary.
Malfunction of the dosing pump	Check the pump.

Filling The Precipitant Tank



Danger:
Observe the safety instructions for handling the precipitant, see Appendix

Polyaluminium hydroxide chloride PAC is used as a precipitant.

Container: canister 60L
See data sheets in the appendix
Annual consumption for an average single-family house: approx. 15 liters
After the precipitant tank has been filled, the new filling volume must be entered on the control.

Dosing Pump

The pump hose inside the housing must be replaced once a year as part of the maintenance.

- Replacement hose: Persitalik hose, material: Santoprene





Please make sure that the plastic cover clicks back into place correctly!

Notes For Plants With Pumped Outlet (option)

- The pump is positioned on the bottom of the tank; make sure that the integrated float moves freely and the length is short so it can easily reach to a vertical position.
- Consider 1 '' cable gland outlet (threaded, DN25) and a 32mm of pump connection inlet

Important Information on Control With DOP

- The metering pump is not monitored for current (no alarm if the pump fails)
- When vacation mode is activated, the dosing pump is inactive

Alarm Relay (for an external signaller)

The control unit has an alarm relay, whereby contacts 11 and 12 of the relay can be connected to an external signalling device (e.g. warning light). Ensure that the external device has a separate power supply so that a power failure in the control unit can also be signalled. When an alarm sounds or there is a power failure, contacts 11 and 12 are connected to one another. Finally (to be performed by a qualified electrician only), the pre-punched opening on the housing is opened and the cable is expertly led through with a PG gland.

Service & Maintenance (specialist companies only)

Replacing the fuse:

If the **control fuse is released**, it should only be replaced by **a microfuse of the following type: T 4.0 A, 250 V, H** (time-delay glass tube microfuse 4.0 A; 5 x 20 mm with a high breaking capacity (opaque) according to EN 60127-2/III.

Changing the battery: Battery maintenance is not required; however, if the alarm duration begins to decrease or the alarm **Accu**, we recommend replacing the accumulators with new ones (type NiMH AA, capacity 1800 to 2100 mAh).

Only rechargeable accumulators (batteries) are permitted; never use normal batteries.

Technical Data And Environmental Conditions For The Control Unit

Technical Data

Housing material:	Polycarbonate for wall mounting
Dimensions:	200 x 120 x 60 mm
Type of protection:	IP54
Supply voltage:	230 V AC, 50 Hz
Control:	Time-controlled using real time clock
Inputs:	1 float switch input
Outputs:	4 relay outputs
Alarm output:	1 alarm relay
Interface:	Internal RS232 interface
Current measurement:	Available Power failure monitoring
Connection technology:	1 x 7-pin flange socket (binder)
Mains voltage via shock-proof plug:	3 x 1.0 mm^2, 1.5 m long
Microfuses:	2x T 4.0 A, 250 V, H (time-delay glass tube microfuse) 4.0 A; 5 x 20 mm with a high breaking capacity, opaque, as a joint fuse for all outputs (L/N)
Sound level:	Max. 57 dB(A) when the acoustic alarm is sounding at a distance of 1 m

Environmental conditions for control unit

Permitted ambient temperatures:

Operating temperature:	Unit function: −20°C to +55°C
Storage temperature:	−25°C to +60°C
Air pressure:	During operation and during storage, 80 kPa to 106 kPa
Relative humidity:	max. 95% rH (condensing) permitted
Ice formation:	Not permitted

Type Plate Control Unit

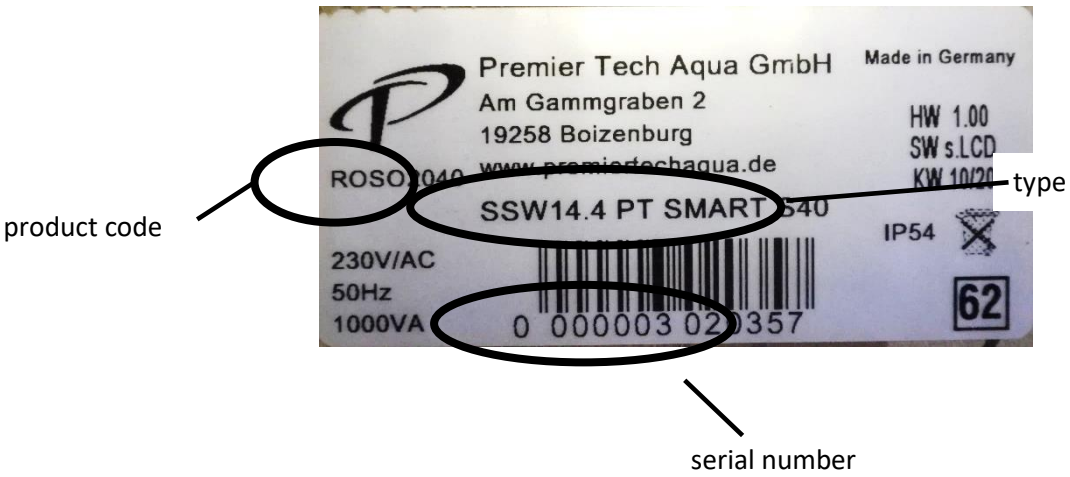

Technical Data For Solido SMART Technology Capsule

Outer dimensions of technology capsule:	D = 340 mm, H = 252 mm (High capsule: H = 352 mm)
Material:	HD-PE
Approval:	UN / 1H2 / X 38 / S
Protection class:	IPX6
Relative humidity:	max. 95% rH (condensing) permitted
Sound level:	max. 36 dB(A) at a height of 1.50 m directly above the cover of the Solido SMART +P (with XP-60)
Solenoid valves:	1 x 3/2-way solenoid valves, DN 13, 1/2" female thread, IP65

Installed compressor:

HIBLOW membrane compressor models	XP-80
Operating pressure (mbar)	147
Applicable pressure range (mbar)	60-270
Air feed rate at operating pressure (l/min)	80
Max. apparent output of technology capsule (S) (VA)	205
Weight (kg)	4.3
Dimensions (mm x mm x mm)	208 x 132 x 186
Protection class	IP45

In the higher capsule:

HIBLOW membrane compressor models	HP-120	HP-200
Operating pressure (mbar)	177	200
Applicable pressure range (mbar)	30 to 300	30 to 300
Air feed rate at operating pressure (l/min)	120	200
Max. apparent output of technology capsule (S) (VA)	285	510
Weight (kg)	8.5	9.0
Dimensions (mm x mm x mm)	256 x 200 x 222	256 x 200 x 222
Protection class	IP45	IP45

Dosing Pump Information



Dosing pump PE – 3

Catalogue number: PP0003A1000_A

Technical specifications

Housing protection of the pump	IP 65
Flow max (l/hr)	3.0
Pressure (bar)	0.1
Suction distance (m)	1.5
Hose connection	Nut 4x6mm
Power supply	230 VAC
Power requirement (W)	3.5
Electrical supply (mA)	100
Scope of delivery	Includes standard assembly kit
Dimensions (mm)	103 x 82 x 92 (H x W x D)
Standards	72/23EEC (19/02/1973) 89/336EEC (from 03/05/1989) EN60336-1

Final effluent pump (optional)

The pump used is TOP vortex (model. 2)



See details for model 2

MODEL	POWER (P2)		Q	m³/h	0	1.2	2.4	3.6	4.8	6.0	7.2	8.4	9.6	10.8
Single-phase	kW	HP		l/min	0	20	40	60	80	100	120	140	160	180
TOP 2 - VORTEX	0.37	0.50	H	metres	7	6.5	6	5.4	4.8	4.2	3.5	2.9	2.2	1.5
TOP 3 - VORTEX	0.55	0.75			8.5	8	7.4	6.8	6.1	5.5	4.7	4	3.2	2.5

Q = Flow rate **H** = Total manometric head

Tolerance of characteristic curves in compliance with EN ISO 9906 Grade 3B.

Technical specifications

Feature	Details
Pump body	Technopolymer
Suction filter	
Suction plate	
Diffuser	
impeller	Technopolymer Vortex type
Motorcasing	Stainless steel AISI 304
Motorcasing plate	Stainless steel AISI 431
Motor shaft	
Electrical motor	Single phase
Capacitor	10uF – 450VL (220V) 16uF – 250 VL (110-127 V)
Electrical motor	220V 60Hz
insulation	Class F
Protection	IP X8
Cable	5.0m H07 RNF power cable with Schuko plug
Hose connection	32 mm (with ring nut)

Generic MSDS for PAC

Chemical agent – properties

Agent name: Polyaluminium Chloride (PAC) solution

- Al_3^+: 9.2 ±0.4 % (3.4 ±0.15 mol/kg)
- Al_2O_3: 17.4 ±0.6%
- pH (at 20°C): <2.0
- colour: Yellow (-ish)

Component	CAS-No	Weight (%)
PAC	1327-41-9	25-35%
Water	7732-18-5	65-75%

Hazard Identification

Classification – OSHA regulatory status

This chemical is considered hazardous by the 2012 OOSHA hazard Communication Standard (29 CFR 1910 1200)

Skin corrosion/irritation	Category 2
Serious eye damage/eye irritation	Category 2
Corrosive to metals	Category 1

Prüfinstitut für Abwassertechnik GmbH

PERFORMANCE RESULTS

Premier Tech Aqua GmbH
Am Gammgraben 2, 19258 Boizenburg, Germany

EN 12566-3, Annex B
Small wastewater treatment systems for up to 50 PT

Small wastewater treatment system SMART + P Millenium 4m³
One chamber SBR system with phosphorus precipitation

Test report PIA2017-300B22

Nominal organic daily load	0.20 kg BOD_5/d	
Nominal hydraulic daily load	0.6 m³/d	
Material	Polyethylene	
Treatment efficiency (nominal sequences)	COD	95.5 %
	BOD_5	98.7 %
	N_{tot}	74.6 %
	NH_4-N*	99.1 %
	P_{tot}	90.0 %
	SS	95.5 %
Electrical consumption	0.56 kWh/d	

**determined for temperatures ≥ 12°C in the bioreactor*

Performance tested by:

PIA – Prüfinstitut für Abwassertechnik GmbH
(PIA GmbH)
Hergenrather Weg 30
52074 Aachen, Germany

This document replaces neither the declaration of performance nor the CE marking

Notified Body No. 1739

Certified according to ISO 9001:2008

DAkkS Deutsche Akkreditierungsstelle D-PL-17712-01-00

Prüfinstitut für Abwassertechnik GmbH
geprüft - tested - testé

Elmar Lancé February 2018

PREMIER TECH

INSTALLATION & SERVICING GUIDE

REWATEC™

Solido Smart +P

PREMIER TECH

Appendix H - Asset Mapping

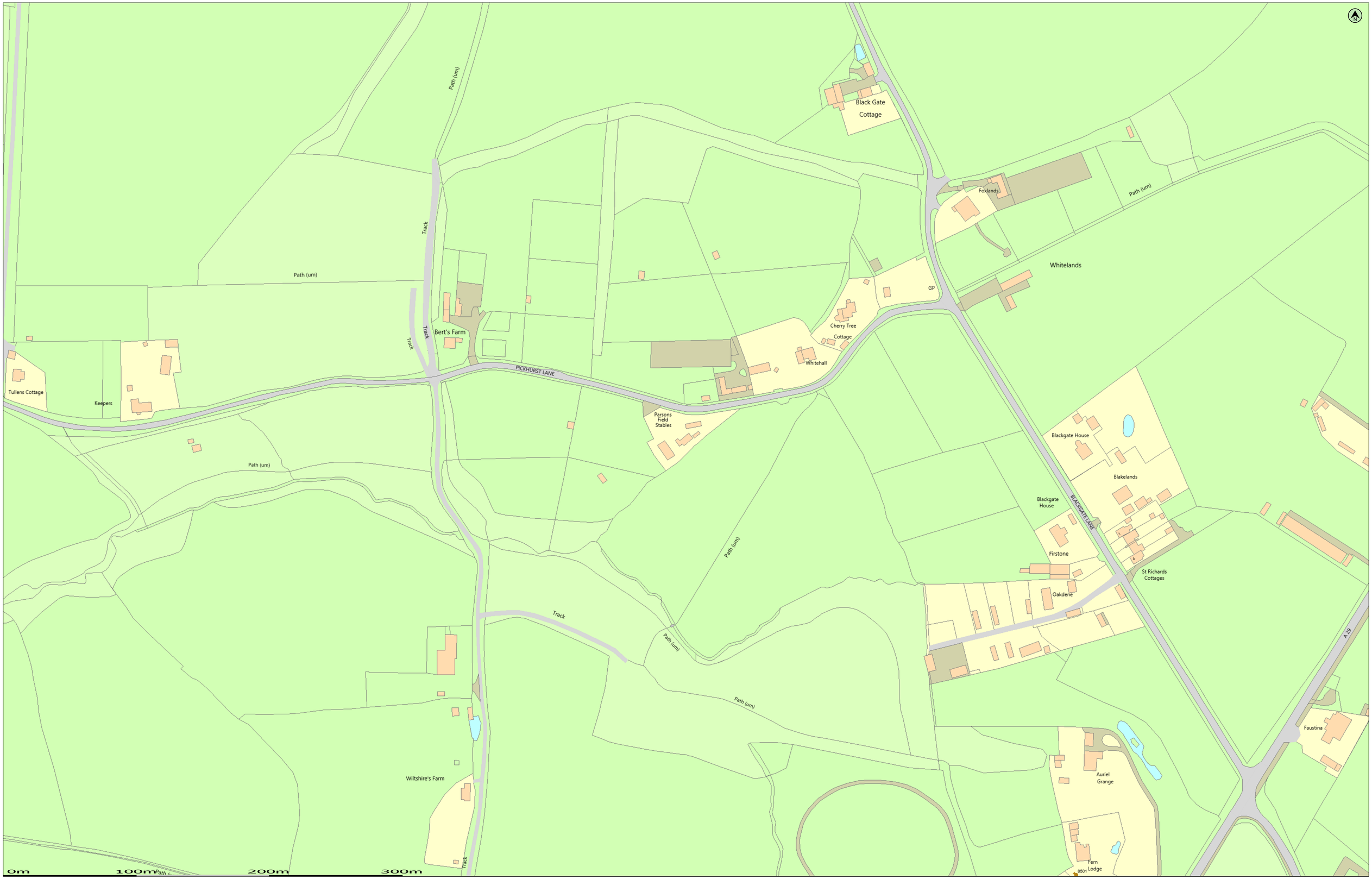

(c) Crown copyright and database rights 2025 Ordnance Survey AC0000808122 | Date: 10/04/25 | Scale: 1:1250 | Map Centre: 505511,120885 | Data updated: 20/03/25 | Our Ref: 1740796 - 1 | Wastewater Plan A3 Powered by digiGIS

The positions of pipes shown on this plan are believed to be correct, but Southern Water Services Ltd accept no responsibility in the event of inaccuracy. The actual positions should be determined on site. This plan is produced by Southern Water Services Ltd (c) Crown copyright and database rights 2025 Ordnance Survey AC0000808122. This map is to be used for the purposes of viewing the location of Southern Water plant only. Any other uses of the map data or further copies is not permitted.

WARNING: BAC pipes are constructed of Bonded Asbestos Cement.

WARNING: Unknown (UNK) materials may include Bonded Asbestos Cement.

Foul Gravity Sewer
Combined Gravity Sewer
Culverted Water Course or Treated Effluent
Surface Water Gravity Sewer
Rising Main, Vacuum or Syphon
Combined Outfall
Surface Water Outfall
Foul Outfall
Surface Water Inlet
Combined Pumping Station
Surface Water Pumping Station
Foul Pumping Station
Water Treatment Works
Section 104 Area
Building Over Agreement Area
Foul Manhole
Combined Manhole
Surface Water Manhole
Side Entry Manhole, Interception Chamber, Dummy Manhole or Surface Water Soakaway

ceri@aegaea.com
Pickhurst Lane

WATER for LIFE from Southern Water.

Manhole Reference	Liquid Type	Cover Level	Invert Level	Depth to Invert
8501	F	28.44	27.22	

Manhole Reference	Liquid Type	Cover Level	Invert Level	Depth to Invert

Manhole Reference	Liquid Type	Cover Level	Invert Level	Depth to Invert

Manhole Reference	Liquid Type	Cover Level	Invert Level	Depth to Invert

Manhole Reference	Liquid Type	Cover Level	Invert Level	Depth to Invert

Manhole Reference	Liquid Type	Cover Level	Invert Level	Depth to Invert