GENERAL CONSTRUCTION NOTES

1. This drawing is to be read in conjunction with all other Haworth McCall drawings and relevant architect's drawings. Any discrepancies between drawings should be reported to Haworth McCall and the architect immediately.
2. Do not scale from this drawing. Use figured dimensions only.
3. Refer to current architects layouts for setting out dimensions.
4. All dimensions & co-ordinates are in millimeters U.N.O.
5. At the start of the works on site the contractor is to verify all assumptions noted on the drawings that have been made in producing the structural design, such as direction of span of joists, existing beams etc. The contractor is to report any discrepancies to Haworth McCall immediately.
6. All works shall comply with current Building Regulations.

TEMPORARY WORKS

- The contractor is responsible for all temporary works and for the stability of the works in progress. All temporary works to be in accordance with BS5975.

STEELWORK

- Structural steelwork sections shall be from BS4:Part1:1993
- Dimensions of all structural steelwork U.N.O to be determined on site prior to fabrication.
- All steelwork materials and workmanship to be in accordance with the latest edition of the 'National Structural Steelwork Specification for Building Construction'
- Steelwork to be erected in accordance with 'BCSA' guidance publications (see www.steelconstruction.org) and all other relevant industry good practice.
- All hot rolled sections to be min. grade S355
- All structural steelwork to be fabricated in accordance with BS5950.
- All surface preparation for steelwork to be in accordance with BS7079: Part A1.
- All structural steelwork shall be blast cleaned to SA 2.5 unless otherwise stated.
- All INTERNAL structural steelwork shall be coated as follows
  - 1 shop applied coat of Zinc Phosphate Epoxy Primer 80 microns DFT, touched up on site as required.
- Structural steelwork shall be fire protected to the architect's specification.
- Provide isolation gaskets between different metal types, eg mild and galvanised steel.

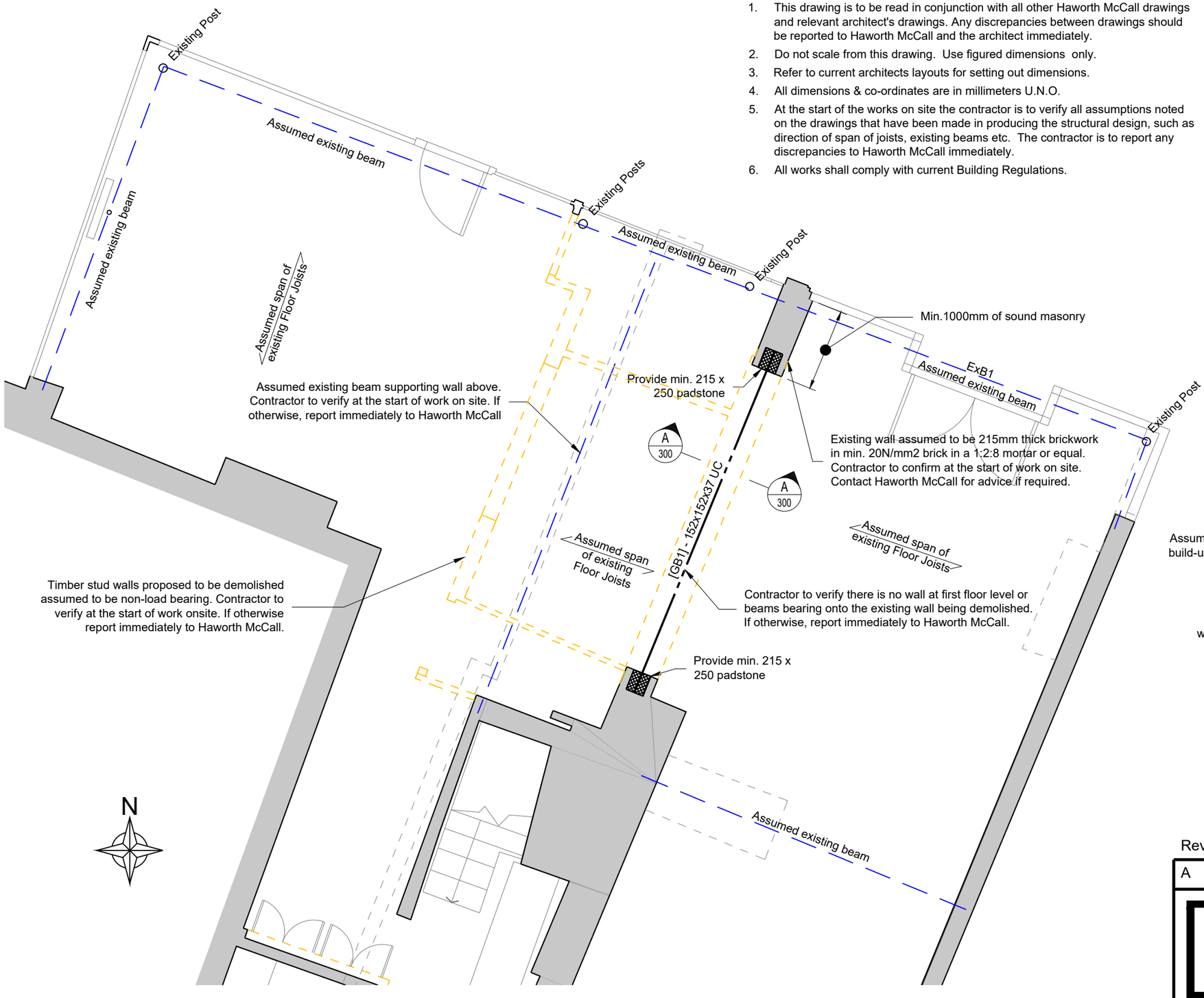

Proposed Ground Floor Plan (Showing Structure Over) 1:50

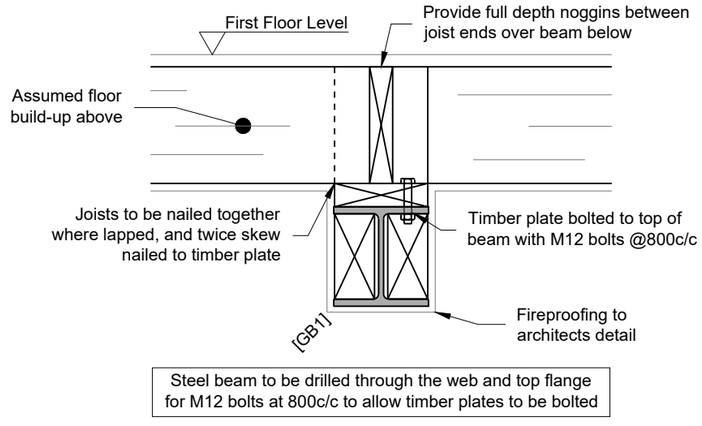

Steel beam to be drilled through the web and top flange for M12 bolts at 800c/c to allow timber plates to be bolted

Section A-A 1:10

SCALE BAR FOR ALL 1:50 DETAILS
0m 1.0m 2.0m 3.0m 4.0m
SCALE BAR FOR ALL 1:10 DETAILS
0m 0.2m 0.4m 0.6m 0.8m
Original drawing size A3

Rev	Date	Description
A	17.11.26	Revised to suit architects comments

Haworth McCall CONSULTING
Brighton: 01273 617117
Belfast: 028 9028 3060
solutions@haworthmccall.co.uk
www.haworthmccall.co.uk

Project:	5 & 5a Middle Street, Horsham
Drawing No.:	2158/300A
Drawing Title:	Proposed Ground Floor Plan
By:	OB
Date:	September 26