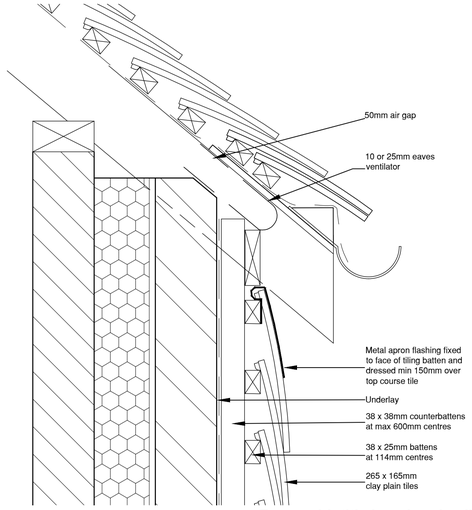

Eaves with title hanging detail
SCALE 1:5

Vertical tiling to eaves with open rafter

Finish under roof eaves with a continuous course of tops tiles.
Fix a code 4 lead flashing to cover the top tiles.
Where the roof is ventilated using a vent tray between the rafters, the air path to the grill must be maintained.
Set the counterbattens at maximum 600 mm centres and extend as high as possible.
The spacing between the open rafters and above the top tiles needs to be in-filled. This can be achieved by 19 or 25mm timber boarding, fixed to vertical noggins nailed into the sides of the open rafters.
Note: Where there is no provision for eaves ventilation the timber boarding can be extended up to touch the underside of the roofing underlay. This detail will prevent birds from nesting between the rafters.

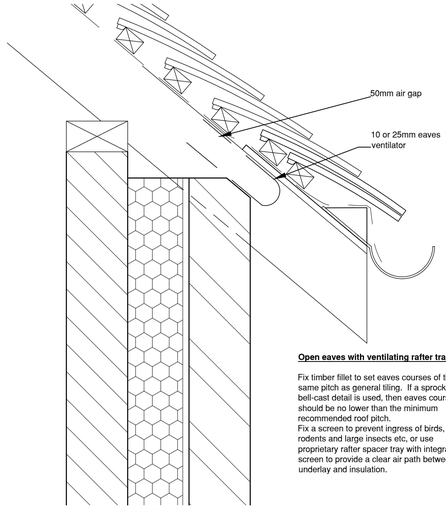

Eaves with brickwork detail
SCALE 1:5

Open eaves with ventilating rafter tray

Fix timber fillet to set eaves courses of tiles at same pitch as general tiling. If a sprocketted or bell-cast detail is used, then eaves courses should be no lower than the minimum recommended roof pitch.
Fix a screen to prevent ingress of birds, rodents and large insects etc, or use proprietary rafter spacer tray with integral screen to provide a clear air path between underlay and insulation.

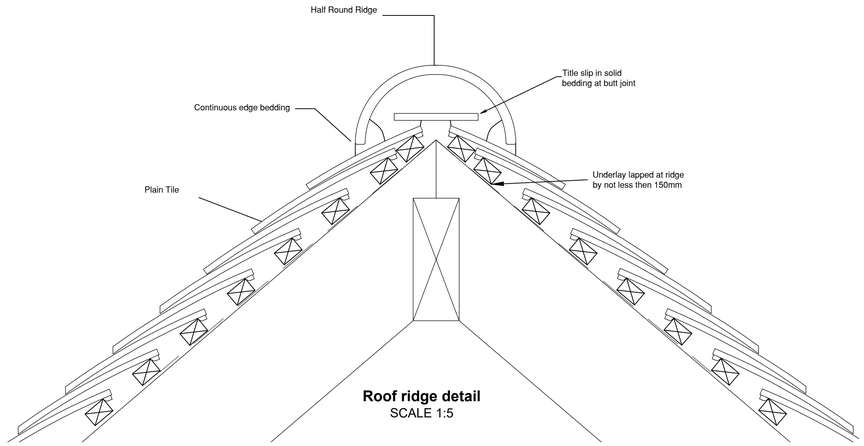

Roof ridge detail
SCALE 1:5

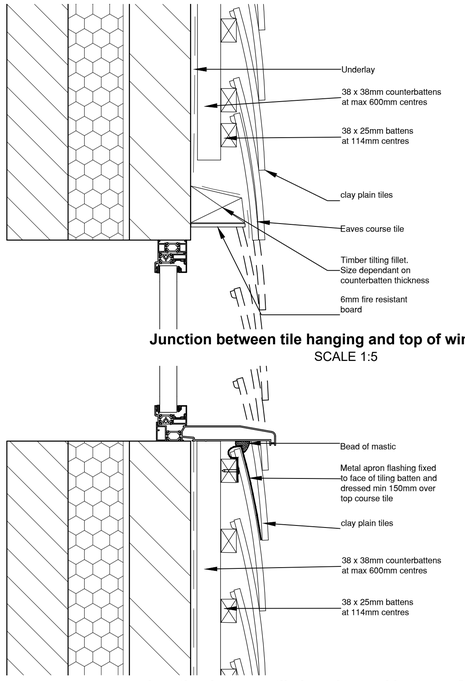

Junction between tile hanging and top of window detail
SCALE 1:5

Vertical tiling to window head

Set the eaves course above the window to allow the window to be installed or removed after the vertical tiling has been installed.
Set the gauge of the vertical tiling between the window sill and window head to eliminate the need for cutting the eaves course of tiles.
Fix a shaped timber tilting fillet to the face of the lintel (approximately 100 x 75mm) large enough to support the eaves course of tiles in the same plane as the rest of the vertical tiling.
Dress the underlay over the tilting fillet to a slight fall.
Terminate the counterbattens just below the eaves tile batten to allow the underlay to dress out over the tilting fillet.
Fix a minimum 6mm thick fire resistant board to the underside of the tilting fillet.

Junction between tile hanging and bottom of window detail
SCALE 1:5

Vertical tiling to timber window sill

Finish battens below the window opening to allow the top course of tiles to fit under the window sill.
Nail the bottom edge of the lead flashing (minimum 200mm wide: Code 4) along the face of the top tile batten and dress it into the top tile nib space.
Once the tops tiles have been fixed the flashing can be carefully dressed onto the surface of the top tiles.
When using a decorative flashing add the decorative section onto the coverage such that it does not compromise the lap relative to the vertical joint and the nail holes.
The flashing should cover the top tiles by a minimum 100mm. If tops tiles are not used then the flashing should be extended to 150mm. It should extend a minimum of 150mm beyond the jamb on either side.

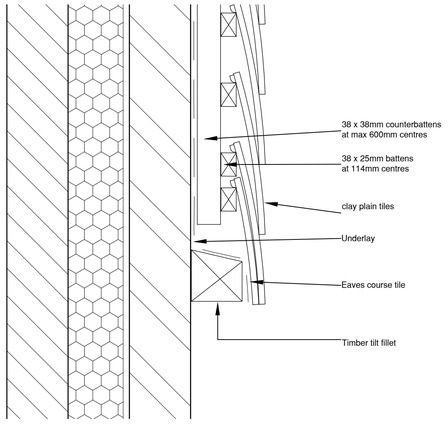

Junction between tile hanging and brick work detail
SCALE 1:5

Vertical tiling eaves

Fix a shaped timber tilting fillet to the face of the lintel (approximately 100 x 75mm) large enough to support the eaves course of tiles in the same plane as the rest of the vertical tiling.
Dress the underlay over the tilting fillet to a slight fall.
Terminate the counterbattens just below the eaves tile batten to allow the underlay to dress out over the tilting fillet.
Where there is a risk of fire entering the batten cavity fix a minimum 6mm thick fire resistant board to the underside of the tilting fillet.

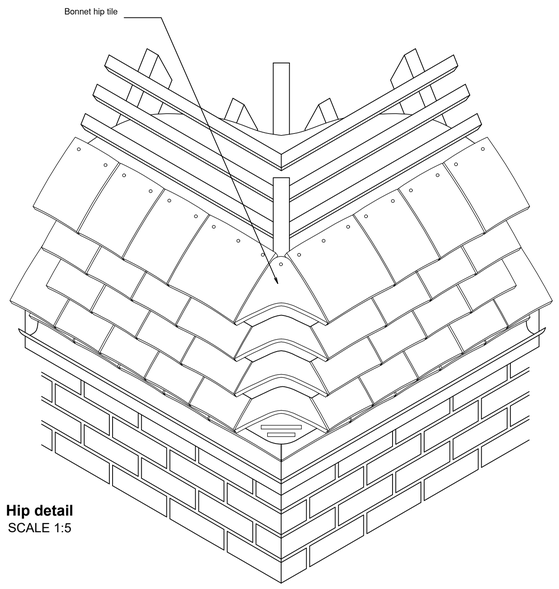

Hip detail
SCALE 1:5

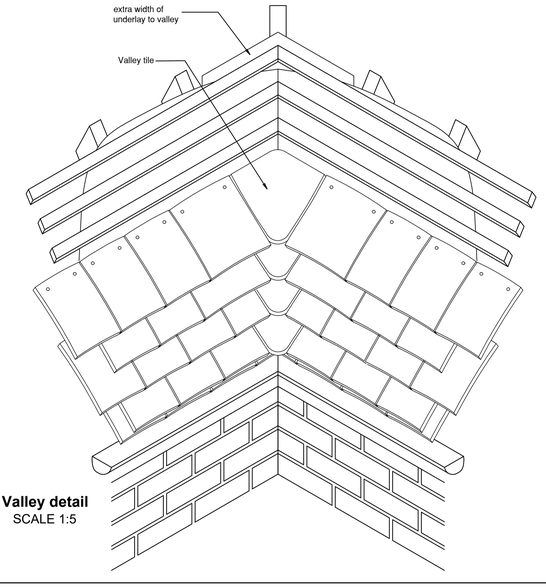

Valley detail
SCALE 1:5

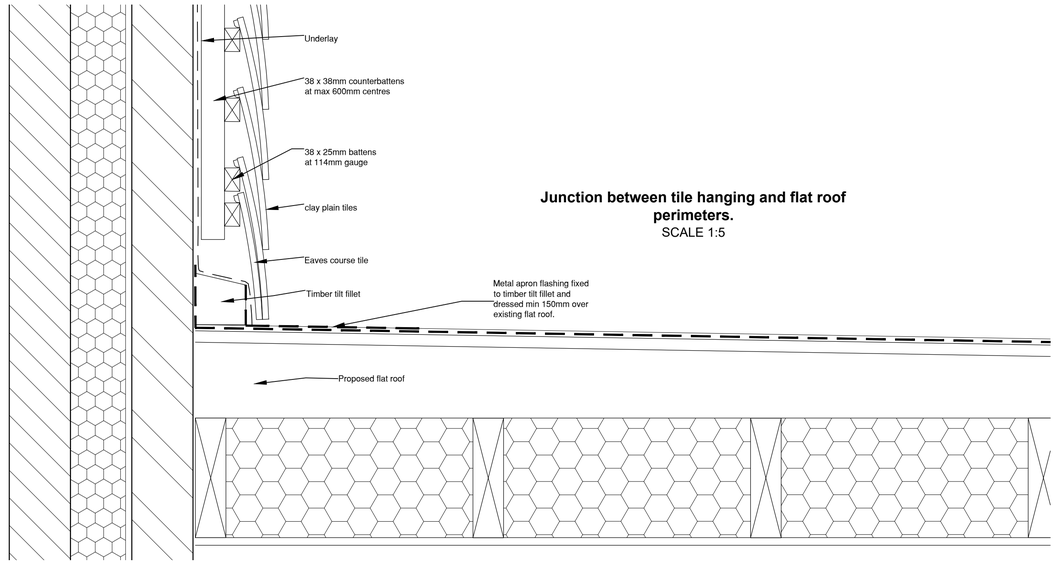

Junction between tile hanging and flat roof perimeters.
SCALE 1:5

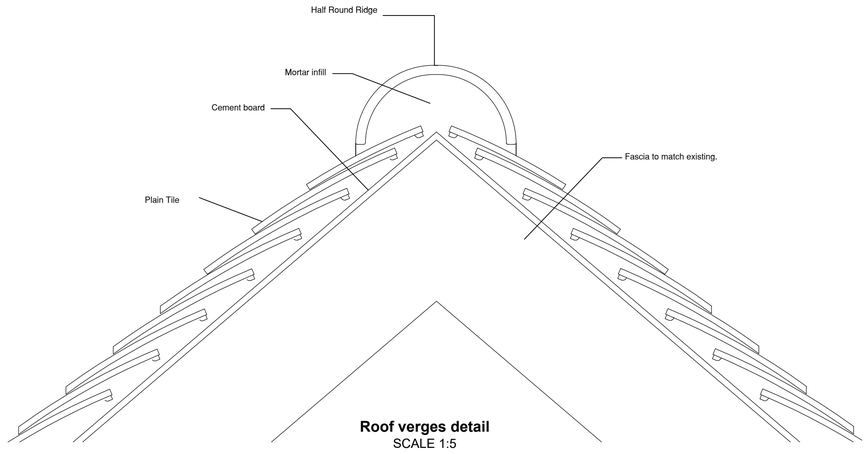

Roof verges detail
SCALE 1:5

0mm 100 200 300 400 500

Scale Bar 1:5

This drawing is to be read in conjunction with all other relevant drawings and specifications.
Do not scale from this drawing. Use figured dimensions only. All levels and dimensions to be checked on site. All dimensional discrepancies are to be brought to the immediate attention of DMA BUILDING DESIGNS.

Responsibility cannot be accepted for alteration and/or deviation from this design without prior knowledge of DMA BUILDING DESIGNS.

Copyright reserved. This drawing may only be used for the client and location specified in the title block. It may not be copied or disclosed to any other third party without prior written consent from DMA BUILDING DESIGNS.

Prior to any works commencing on site, DMA BUILDING DESIGNS is to be contacted regarding the current status, revision or regulatory approval of this drawing.

Notes

REV	DESCRIPTION	DATE
P1	ISSUED FOR APPROVAL	15.03.2024

DMA BUILDING DESIGNS
UNIT 4B, RUDGWICK BRICKWORKS, LYNWICK ST RUDGWICK, HORSHAM, WEST SUSSEX, RH12 3DH.
TEL No 01403 822220 Mobile 07730 523447
Email - admin@dmabuildingdesigns.co.uk

CLIENT
MR AND MRS NADALIN

PROJECT
DEMOLITION OF EXISTING SINGLE STOREY REAR EXTENSION AND REPLACED WITH TWO STOREY TO REAR AND SIDE WITH INTERNAL ALTERATIONS.

DRAWING
DETAILS
CHEWTON, THE STREET, SLINFOLD,
HORSHAM, WEST SUSSEX, RH13 0RR

STATUS
PLANNING APPLICATION

SCALE @ A1	DATE	DRG No	REVISION
1:5, 1:100	MARCH 2024	DE 1045 / H / 90	P1