SAGITTARIUS

TAPS & SHOWERING

MILAN VERTICAL EXPOSED SHOWER VALVE CHROME SH/163/C

Construction	Brass Body (CuZn38Pb18)
Finishes	Chrome plated to BS EN 248
Product Type	Contemporary
Water Pressure	Min. 0.5 bar, Max. 6.0 bar
Plumbing Systems	Suitable for all plumbing systems, preferably balanced.Min. supply pressure differential requirement is 5:1
Standards	Complies with BSEN 1111
Certification	Manufactured to comply with WRAS, TMV2
Cartridge	Thermostatic; Ceramic disc cartridge
Fitting	G1/2" BSP TAILS
Check valve	0.5-10 gpm
Packaging	38 x 22 x 29cm / carton (10 boxes / carton)
Guarantee	10 years against manufacturing faults (excluding serviceable parts).
Additional Information	1.Temperature: Pre-set 38°C, with push button override to 48°C. 2.Automatic shut off in the event of hot or cold water supply failure.



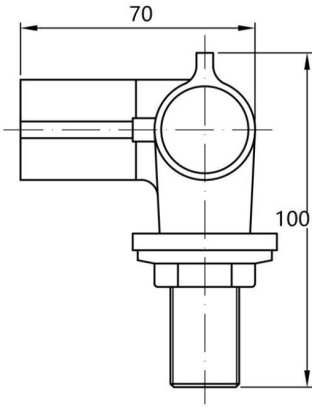

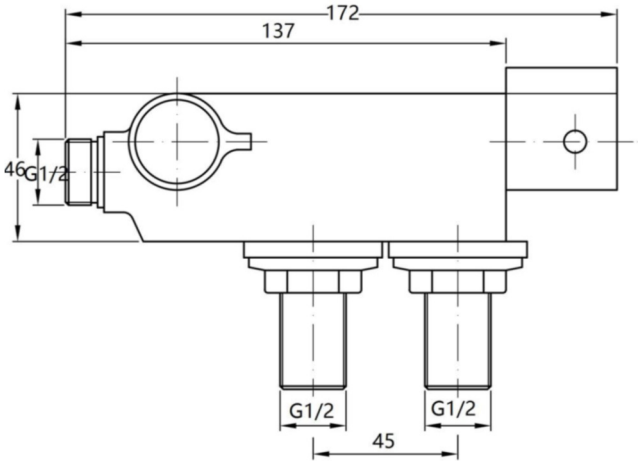

Flow Rates (Litres per minute)

System Pressure	0.1 Bar	0.2 Bar	0.3 Bar	0.5 Bar	1.0 Bar	1.5 Bar	2.0 Bar	3.0 Bar	4.0 Bar	5.0 Bar
SH/163/C	4.0	6.5		9.5	11.0	13.3	15.1	16.9		

The information contained on this page was correct at the date of issue. Fitting dimensions are provided as a guide only. Some variation may occur due to manufacturing tolerances. We pursue a policy of continuing improvement in design and performance of our products and so reserve the right to change specifications without prior notice

FOR FURTHER ADVICE PLEASE CONTACT :-
SAGITTARIUS LTD UNIT 1 LOWER VICTORIA STREET—CHADDERTON—OLDHAM—OL9 9TU TEL:0616 6202029
EMAIL:TECHNICAL@SAGITTARIUSTAPS.CO.UK

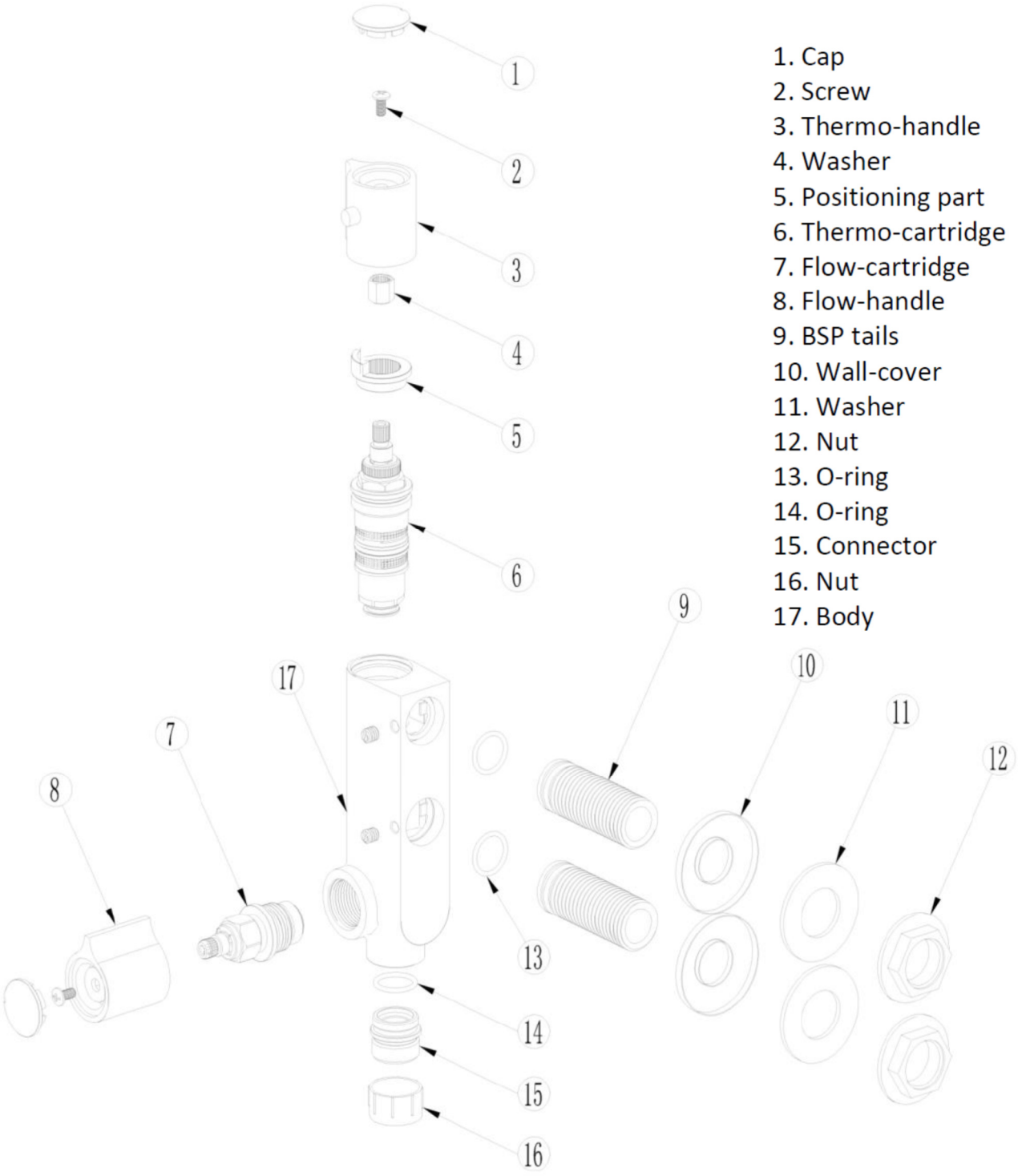

1. Cap
2. Screw
3. Thermo-handle
4. Washer
5. Positioning part
6. Thermo-cartridge
7. Flow-cartridge
8. Flow-handle
9. BSP tails
10. Wall-cover
11. Washer
12. Nut
13. O-ring
14. O-ring
15. Connector
16. Nut
17. Body

The information contained on this page was correct at the date of issue. Fitting dimensions are provided as a guide only. Some variation may occur due to manufacturing tolerances. We pursue a policy of continuing improvement in design and performance of our products and so reserve the right to change specifications without prior notice

FOR FURTHER ADVICE PLEASE CONTACT :-
SAGITTARIUS LTD UNIT 1 LOWER VICTORIA STREET—CHADDERTON—OLDHAM—OL9 9TU TEL:0616 6202029
EMAIL:TECHNICAL@SAGITTARIUSTAPS.CO.UK