Tree survey & report

Saunton, Cagefoot Lane, Henfield BN5 9HD

Prepared by

Jonathan Rodwell Cert Arb L4(ABC); TechArborA

October 2024

CONTENTS

-	Summary, details and references	1
1.0	Introduction	2
2.0	Documents provided	2
3.0	Survey format	3
4.0	Grading categories	3
5.0	Legislation	3
6.0	Development proposal	4
7.0	Site description	4
8.0	Tree survey	4
9.0	Tree appraisal	5

Arboricultural Impact Assessment **6**

10.0	Below ground constraints – Root protection area (RPA)	6
11.0	Above ground constraints	6
12.0	Comment	7
13.0	Conclusion	7

Arboricultural Method Statement **9**

14.0	Sequence of events	8
15.0	Protective barriers & construction exclusion zone	10
16.0	Demolition	11
17.0	Foundation construction	11
18.0	Infrastructure requirements	12
19.0	Additional precautions	12
20.0	Supervision & monitoring	13

Appendices:
1- Tree survey schedule. 2 - Definition of terms. 3 - BS 5837 grading categories. 4 - Tree constraints plan. 5 - Development proposal plan. 6 - Tree protection plan. 7- Protective barriers. 8 - Site visit and arboricultural supervision record. 9 - Arboricultural monitoring.

SUMMARY

- The quality of 10 trees within influence of a development proposal was assessed;
- an arboricultural impact assessment of the development proposal was prepared;
- the proposal is for construction of a replacement porch.
- implementation of the development proposal does not require the removal of any trees so the arboricultural characteristics of the site remain unchanged;
- precautionary measures will be required to protect the retained trees throughout the development process.

Details

- Date of survey - 17th October 2024
- Present at survey - Jonathan Rodwell Cert Arb L4(ABC); TechArborA
- Date of report - 23rd October 2024

Contact Details

Local Planning Authority	Horsham District Council	**Tel –** 01403 215187 **Email** – planning@horsham.gov.uk
Architects	Folkes Architects	**Tel –** 01903 868629 **Email** – info@folkesarchitects.co.uk
Arboricultural Consultants	Beechdown Arboriculture Ltd	**Tel** – 01243 814740 **Email-** jonathan.rodwell@beechdown.com

References

Roberts, J. Jackson, N. Smith, M. (2006). *Tree Roots in the Built Environment.* The Stationery Office
BSI British Standards (2012) *BS 5837:2012 Trees in relation to demolition and construction – Recommendations, Fourth (Present) Edition.* BSI

Jonathan Rodwell Cert Arb L4(ABC); TechArborA
Beechdown Arboriculture Ltd 23rd October 2024

1.0 Introduction

1.1 I have received instruction from Andrew Ballard to report on arboricultural matters in relation to proposed development at Saunton, Cagefoot Lane, Henfield BN5 9HD.

1.2 The purpose of the instruction was to:

- Assess the quality of any trees that could be affected by the proposed development.
- Prepare an arboricultural impact assessment evaluating the effects of the development proposal.
- Prepare a method statement and tree protection plan.

1.3 The survey was conducted and the report prepared with reference to the guidelines detailed in BS 5837:2012 "Trees in relation to design, demolition and construction – Recommendations" and according to good arboricultural practice.

1.4 Contents of the report are exclusively for the use of the client; liability does not extend to any third party without our written consent.

1.5 ***Qualifications and experience*** – I am a qualified arboriculturist and Technician Member of the Arboricultural Association with more than 30 years' experience working with trees. I have a National Certificate in Arboriculture, the ABC Level 4 Certificate in arboriculture and the LANTRA Professional Tree Inspection Certificate along with certificates of training/attendance including arboricultural consultancy & report writing, veteranisation, valuing & managing veteran trees, subsidence investigation, assessment of tree forks, mortgage reports and risk assessment for commercial arboriculture.

2.0 Documents Provided

2.1 Drawings provided by Folkes Architects:

23054 2.02	Proposed plans - preliminary	1:100@A1

3.0 Survey Format

3.1 Trees included in the survey were those with the potential to be affected by the development proposal and with a stem diameter, at 1.5m high, greater than 75mm. The trees were inspected from the ground only and no specialist decay detection was undertaken. Trees were assessed from within the site or from public areas.

3.2 The tree identification numbers used are for the purpose of this report and may not reflect numbering used in previous surveys.

3.3 Data was recorded digitally, the individual trees plotted via GPS and their positions marked on the 1:200 @ A3 tree constraints plan (Appendix 4).

3.4 A detailed tree survey sheet is shown as Appendix 1 with an explanation of the terms and categories covered as Appendix 2.

3.5 The extent of the survey was limited to collecting sufficient data to inform upon the feasibility of the proposed development, it was not a detailed tree hazard or risk assessment and, unless specified, no guarantee, expressed or implied, can be given regarding the safety of the trees or their suitability for safe long-term retention.

4.0 Grading Categories

4.1 The quality of the surveyed trees was assessed and they were categorised to reflect the criteria recommended in Table 1 of BS 5837:2012 as detailed at Appendix 3.

4.2 The following is a breakdown of the number of trees in each BS category.

Category U	0 trees
Category A	0 trees
Category B	10 trees
Category C	0 trees

5.0 Legislation

5.1 ***Tree Preservation Orders & Conservation Areas*** - Local Planning Authority (LPA) online mapping showed that the application site is within a designated conservation area and that two of the limes on the northern boundary and the mature beech on the western boundary are subject to a tree preservation order **TPO/0345**.

5.2 ***Wildlife legislation*** – under Part 1 of the Wildlife and Countryside Act (1981), with only a few exceptions, it is an offence to intentionally take, damage or destroy the nest of any wild bird while the nest is in use or being built. Bat species are protected under Section 39 of the 1994 Conservation (Natural Habitats etc.) Regulations (as amended), the 1981 Wildlife and Countryside Act (as amended) and the 2000 Countryside and Rights of Way Act. It is illegal to damage or destroy any bat roost, whether occupied or not, or disturb or harm a bat. Further specialist investigation may be required before undertaking any recommended works.

6.0 Development Proposal

6.1 The proposal is for demolition of the existing entrance porch and construction of a larger enclosed porch in its place; construction of a car-port; installation of exterior lighting; construction of a new section of boundary wall; replacement of exterior doors and windows and rendering brickwork.

7.0 Site Description

7.1 Saunton is a two-storey detached dwelling with separate double garage, studio and timber outbuildings set in broadly-level grounds of around 715m². Access from Cagefoot Lane is via a double gateway that opens immediately into a gravel parking area next to the garage before narrowing to a tarmac driveway leading up to the front of the house with paving slabs continuing to the porch and around to the patio at the back of the house. A 1.2m high boundary wall borders Cagefoot Lane to the north with a close-board fence on the boundary with Squirrels to the west and a panel fence on the east and south boundaries.

7.2 The application site is in a village location surrounded by open farmland. The immediate wider landscape includes individual trees or small groups in domestic settings, as roadside trees or within parks and green open spaces.

7.3 The British Geological Survey records the site geology as Folkestone Formation sandstone sedimentary bedrock while the superficial geology is described by the UK Soil Observatory (www.ukso.org) as a freely draining, slightly acid loamy soil. No detailed analysis of the soil structure, composition or pH was undertaken and these details should not be relied on for design purposes.

8.0 Tree Survey

8.1 The majority of the trees recorded were in the grounds of Saunton, with details of just the western red cedar (T9), in the garden of Woodlawn to the east,

estimated. Trees and shrubs that were too small to be recorded or beyond influence of the development proposal included bay, bamboo, hornbeam, camelia, yew, *Aucuba*, laurel & holly in the front garden; yew, sycamore, laurel & sweet gum in the garden of Woodlawn to the east and *Viburnum*, *Choisya*, apple, *Euonymus*, *Aucuba*, jasmine, paeony & *Cotoneaster* in the back garden.

9.0 Tree Appraisal

9.1 Details and comments of individual trees and groups are listed in the appended BS 5837 survey schedule detailed at Appendix 1.

10.0 Below Ground Constraints – Root Protection Area (RPA)

10.1 Section 3.7 of BS 5837: 2012 states that – "*The Root Protection Area (RPA) is a layout design tool indicating the minimum area around a tree deemed to contain sufficient roots and rooting volume to maintain the tree's viability, and where the protection of the roots and soil structure is treated as a priority.* "

10.2 The RPA calculations have been produced using the information gathered from the tree survey and section 4.6.1 of BS 5837:2012. This indicates the RPA in m^2 and the minimum required all round radial distances for rooting zone protection and allows a view to be taken as to whether the trees can be retained safely without undue damage to their root systems. The RPA calculations are detailed in the appended tree survey and the initial dimensions marked on the 1:200 @ A3 tree constraints plan (Appendix 4).

10.3 Tree root morphology can be affected by numerous factors; availability of water, aeration, soil type, temperature and structure, compacted or impervious surfaces and proximity to buildings and other structures all affect the way roots develop and although the RPAs are marked on the plan as uniform polygons the actual root systems will be far more irregular. Root mapping or hand excavation under arboricultural supervision could determine whether structural roots or root masses & likely mycorrhizal associations extend beyond the RPAs and require greater protection in relation to construction or whether it may be possible to develop within the RPA without a negative impact on the rooting environment.

10.4 The recorded trees are growing in unsurfaced ground and while the opposing constraints of the driveway and road surface means the nominal RPA of the limes on the northern boundary is a fair representation it is quite possible that root development of the beech trees on the western boundary is more extensive in the garden of Squirrels. Whatever the actual extent of rooting there is no doubt that construction of the new porch & boundary wall and installation of outdoor lighting will have the potential for impact on root protection areas.

11.0 Above Ground Constraints

11.1 Consideration should be given to the effects that the current tree size, future growth potential, shade levels and leaf and fruit nuisance may have on the proposed development. Tree height and crown spread measurements are detailed in the appended tree survey; the crown spread of the trees and the shadow pattern through the main part of the day is indicated on the 1:200 @ A3 tree constraints plan (Appendix 4).

12.0 Comment

12.1 Replacing the windows & doors, rendering the brickwork and constructing the car-port – attached to the dwelling & garage – will have no impact on the recorded trees.

12.2 The replacement porch, shown on the 1:200 @ A3 development proposal plan (Appendix 5), occupies a total surface area of around 9m² - around 6m² larger than the existing porch. Construction of new foundations will take place fully within the combined RPA.

12.3 Excavation for foundations, changes in soil level, compaction or permanent hard surfacing bearing directly on the soil can all have a potentially damaging effect on tree roots, the rooting environment and overall tree health. Construction of new foundations will need to use screw piles or driven concrete piles supporting beams or a concrete raft over a 150mm biodegradable void former that will allow gaseous exchange and water infiltration where the foundation interacts with the RPA and leaves the rooting environment intact.

12.4 Installation of the exterior LED lighting takes place largely within the root protection area – particularly of the beech trees on the western boundary – and routing for the power supply has the potential for root damage.

12.5 Construction of the new section of boundary wall takes place fully within the RPA of the lime (T4). The existing foundation will be used and no further excavation within the RPA is necessary.

12.6 Construction access, delivery of materials and removal of waste will be via the existing compacted driveway.

12.7 I do not consider the current or future growth of the trees to have a greater impact on the development proposed than for the existing dwelling and layout.

13.0 Conclusion

13.1 With appropriate precautionary measures I consider the proposed development at Saunton feasible, in relation to the recorded trees, for the following reasons.

- Implementation of the development proposal does not require the removal of any trees so the arboricultural characteristics of the site will remain unchanged.

- I do not consider current or future growth of the trees to have a greater impact on the development proposal or to lead to increased pressure for removal or unsympathetic pruning any more for the proposed development than for the existing dwelling.

- Precautionary measures will prevent damage and potentially negative effects of construction on tree health.

- The development process should follow a sequence that results in the least risk to the retained trees and with tree protective fencing and exclusion zones in place as per the tree protection plan (TPP).

- The arboricultural method statement includes the following tree protection plans.

Appendix 6 – *tree protection plan*	1:100@A3	• Tree protection plan showing position of protective barriers and construction exclusion zones.

14.0 Sequence of Events

14.1 Sequence of events, tree protection and precautionary measures in relation to phases of development.

Pre-construction	Site meeting	Project arboriculturalist to discuss tree protection measures with architect/developer and local authority arboricultural officer.
Pre-construction	Protective barriers	Project arboriculturalist to mark position of protective barrier forming construction exclusion zones.
	Protective barriers	Project arboriculturalist to check position of protective barrier forming construction exclusion zone.

Construction	Supervision	Arboricultural supervision of hand-excavation to locate piles.
Construction	Supervision	Arboricultural supervision of hand-excavation of service trenches.
Construction	Monitoring	Arboricultural monitoring every two to four weeks of continuous site activity.

15.0 Protective Barriers & Construction Exclusion Zone

15.1 Prior to the commencement of construction work and before any machinery or materials are brought onto the site, protective barriers, marked as **a green broken line** on the tree protection plans (Appendix 6), must be erected, around the vulnerable Root Protection Area (RPA) to create a construction exclusion zone beyond the working area.

15.2 The construction exclusion zone, shown as **light purple shading** on the tree protection plan, will be afforded protection at all times during the development process; strictly no access, excavation, changes in soil levels, construction activities, mixing materials or storage will be allowed.

15.3 The barrier will have weather proof signs attached stating that it is protecting a **construction exclusion zone** and that **no works are permitted** beyond the barrier; the protective barrier must remain in place for the duration of the development process.

15.4 The protective barriers must be positioned in accordance with the tree protection plans and would typically be constructed as per figure 2 of BS 5837:2012 (shown at Appendix 7) and consist of a vertical and horizontal scaffold framework, well braced to resist impacts with vertical tubes spaced at a maximum interval of 3m and driven securely into the ground and onto which weld mesh panels would be fixed with wire or scaffold clamps. Care should be taken when locating the vertical and bracing poles to avoid roots; if the presence of roots or hard surfaces precludes the use of driven poles, above ground stabilising using struts mounted on a block tray, constructed as per figure 3 b) of BS 5837:2012 may be used.

- ***Construction exclusion zone 1*** – formed of nine weld mesh panels positioned at the edge of the driveway & paved area and parallel with the western boundary fence to prevent access to the unsurfaced RPA and base of trees T4-T8. Very limited scope for using driven poles so the panels can be mounted in block trays.
- ***Construction exclusion zone 1*** – formed of three weld mesh panels positioned to prevent access to the unsurfaced RPA and base of trees T1-T3. Very limited scope for using driven poles so the panels can be mounted in block trays.

15.5 The heavily compacted surface of the gravel driveway, tarmac and paved areas will provide an appropriate working surface for the majority of machinery access, delivery of materials and removal of waste but depending on the size of the piling rig used additional ground protection may be required. The existing paved area between the house and the western boundary fence must be retained as ground protection until construction of the porch is finished.

16.0 Demolition

16.1 Demolition and removal of the existing porch and section of boundary wall will take place beyond the fenced RPA of retained trees, from within the footprint of the buildings and existing compacted or hard. Practical measures to manage any risk of damage to the retained trees may include:

- repositioning temporary fencing to maintain protection as the site clearance progresses;
- use a top-down pull-back approach to demolition from within the footprint of the building;
- demolition waste to be removed by hand or with machinery sited outside the RPA or positioned on temporary ground protection;
- no excavation or changes to soil level within RPA after demolition;
- 100mm of top soil should be spread by hand if roots exposed on removal of existing hard surfaces;
- appropriate pruning, tying back branches or temporary protection of stems;
- if the demolition is undertaken during the summer months it may be necessary to hose down the trees if there is an accumulation of dust on the foliage.

17.0 Foundation Construction

17.1 An engineer designed piled raft foundation will minimise risk to the RPA of retained trees. This foundation will leave the soil level within the RPA of the surveyed trees unchanged. A 150mm biodegradable void former will allow gaseous exchange and water infiltration where the foundation interacts with the RPA. The piles should be sleeved to a depth of 3m to reduce friction and the

potential for heave; the sleeved piles will also reduce the potentially harmful effects of uncured concrete on tree roots.

17.2 The location of the individual piles will follow hand excavation under - arboricultural supervision - to a depth of at least 600mm - to avoid significant roots or root masses and prevent root severance. Use of the smallest sized pile possible will reduce the risk of hitting and damaging significant roots and limit the size of the piling rig required. The piling rig will operate from beyond the unsurfaced RPA or from suitable ground protection depending on the size of the rig. If roots are encountered during excavation:

- Careful use of hand tools will avoid bark damage of retained roots at the pile locations;
- exposed roots or fibrous root masses that are to be retained should be immediately covered – with hessian or similar - to prevent drying;
- individual roots less than 25mm diameter that need to be removed should be cleanly severed, with secateurs or a pruning saw.

17.3 Construction of the new section of boundary wall will use the existing foundation.

18.0 Infrastructure Requirements

18.1 Installation of the power supply to the exterior LED lights should use a shallow trench – hand dug under arboricultural supervision – and routed to avoid structural roots and root masses.

18.2 Undisclosed siting of service runs, above ground services, CCTV cameras, electrical sub-stations, refuse stores, lighting and other infrastructure requirements can lead to unnecessary tree pruning or root loss during or post development. Should any infrastructure requirements become necessary post planning their design should be discussed with the project arboriculturalist and, if necessary, the permission of the local planning authority obtained.

19.0 Additional Precautions

19.1 No storage or mixing of materials to take place within the construction exclusion zone or in the ground protected RPA.

19.2 No storage or mixing of materials will take place in any location where they may leak into the construction exclusion zone or RPA.

19.3 Materials which may contaminate the soil will not be discharged within 10m of the tree stems or mixed in any location where gradients allow contaminants to run towards RPAs.

20.0 Supervision and Monitoring

20.1 It will be the responsibility of the main contactor to ensure that any conditions attached to the planning consent are adhered to at all times and that a monitoring regime with regard to tree protection on site is adopted.

20.2 An arboriculturalist should be appointed to monitor tree protection measures and address any arboricultural issues that may arise.

20.3 The project arboriculturalist should mark the positions of the protective barriers and inspect them once erected and prior to site work commencing.

20.4 In addition to any scheduled supervision, regular site visits to inspect the protective barriers may be required. Frequency of the visits is dependent on the progress of the development but should take place every two to four weeks of continuous site activity.

20.5 A copy of a site visit and arboricultural supervision record is shown at Appendix 8.

20.6 A copy of an arboricultural monitoring record is shown at Appendix 9.

20.7 The main contractor will be responsible for ensuring subcontractors comply with the arboricultural method statement and do not undertake any operation that is likely to impact adversely upon any tree on site.

20.8 The main contractor will ensure that the build sequence is appropriate to ensure that no damage occurs to the trees during the development process.

Beechdown Arboriculture Ltd
Club Cottage, Top Road
Slindon
Arundel
West Sussex
BN18 0RP
Phone: 01243 814740
Mobile: 07941 156492
jonathan.rodwell@beechdown.com

client: Andrew Ballard
Project: Saunton
Survey date: 17th October 2024
Surveyor: Jonathan Rodwell Cert Arb L4(ABC); TechArborA

BS5837:2012 Assessment

Tree ID : T1 **Tag :** **Assessor :** Jonathan Rodwell Cert Arb L4(ABC); TechArb **Bats :** No
Species : Small-Leafed Lime **TPO :** **Inspected :** 17 October 2024 **Cons Area :** Yes
Tilia cordata **Next Insp :** Not Required
1st Branch: 2m; north

Stems				Health						RP				Clearance (m)				Spread (m)			
H (m)	No	Ø (mm)	Maturity	Crown	Stem	Basal	Phy Con	Cat	ERC	A (m²)	R (m)	Site Status	Priority	N	E	S	W	N	E	S	W
8.5	1	390	Mature	Fair	Fair	Fair	Good	B.1.2	20 to 40 yrs	68.8	4.67	Pre Construction		3	3	3	3	2	2	2.5	1.5

Survey Comment : Pollarded at around 4m.
Tree Comment :

Tree ID : T2 **Tag :** **Assessor :** Jonathan Rodwell Cert Arb L4(ABC); TechArb **Bats :** No
Species : Small-Leafed Lime **TPO :** **Inspected :** 17 October 2024 **Cons Area :** Yes
Tilia cordata **Next Insp :** Not Required
1st Branch: 1.5m; north

Stems				Health						RP				Clearance (m)				Spread (m)			
H (m)	No	Ø (mm)	Maturity	Crown	Stem	Basal	Phy Con	Cat	ERC	A (m²)	R (m)	Site Status	Priority	N	E	S	W	N	E	S	W
9	1	410	Mature	Fair	Ivy	Fair	Good	B.1.2	20 to 40 yrs	76.1	4.92	Pre Construction		2	3	3	4	2	1.5	3	2

Survey Comment : Pollarded at around 4m.
Tree Comment :

BS5837:2012 Assessment

Tree ID : T3 **Tag :** **Assessor :** Jonathan Rodwell Cert Arb L4(ABC); TechArb **Bats :** No

Species : Small-Leafed Lime **TPO :** **Inspected :** 17 October 2024 **Cons Area :** Yes

Tilia cordata

Next Insp : Not Required

1st Branch: 2m; south

Stems				Health						RP		Site Status	Priority	Clearance (m)				Spread (m)			
H (m)	No	Ø (mm)	Maturity	Crown	Stem	Basal	Phy Con	Cat	ERC	A (m²)	R (m)			N	E	S	W	N	E	S	W
9	1	310	Mature	Fair	Ivy	Fair	Good	B.1.2	20 to 40 yrs	43.5	3.72	Pre Construction		1.5	1.5	3	3.5	3	2	2	3

Survey Comment : Pollarded at around 4m.

Tree Comment :

Tree ID : T4 **Tag :** **Assessor :** Jonathan Rodwell Cert Arb L4(ABC); TechArb **Bats :** No

Species : Common Lime **TPO :** **Inspected :** 17 October 2024 **Cons Area :** Yes

Tilia europaea

Next Insp : Not Required

1st Branch: 1.5m; west

Stems				Health						RP		Site Status	Priority	Clearance (m)				Spread (m)			
H (m)	No	Ø (mm)	Maturity	Crown	Stem	Basal	Phy Con	Cat	ERC	A (m²)	R (m)			N	E	S	W	N	E	S	W
8.5	1	320	Mature	Fair	Good	Fair	Good	B.1.2	20 to 40 yrs	46.3	3.83	Pre Construction		1.5	2	1.5	1.5	3	3	3	3

Survey Comment : Pollarded at around 4m.

Tree Comment :

Tree ID : T5 **Tag :** **Assessor :** Jonathan Rodwell Cert Arb L4(ABC); TechArb **Bats :** No

Species : Copper Beech **TPO :** **Inspected :** 17 October 2024 **Cons Area :** Yes

Fagus sylvatica 'Purpurea'

Next Insp : Not Required

1st Branch: 7m; north-west

Stems				Health						RP		Site Status	Priority	Clearance (m)				Spread (m)			
H (m)	No	Ø (mm)	Maturity	Crown	Stem	Basal	Phy Con	Cat	ERC	A (m²)	R (m)			N	E	S	W	N	E	S	W
16	1	610	Mature	Fair	Good	Good	Good	B.1.2	>40 yrs	168.4	7.32	Pre Construction		2.5	3	5	4	6	5	4	5

Survey Comment : Regularly pruned to maintain a compact form.

Tree Comment :

BS5837:2012 Assessment

Tree ID : T6 **Tag :** **Assessor :** Jonathan Rodwell Cert Arb L4(ABC); TechArb **Bats :** No

Species : Copper Beech **TPO :** **Inspected :** 17 October 2024 **Cons Area :** Yes

Fagus sylvatica 'Purpurea'

Next Insp : Not Required

1st Branch: 5m; north-west

Stems				Health						RP			Clearance (m)				Spread (m)			
H (m)	No	Ø (mm)	Maturity	Crown	Stem	Basal	Phy Con	Cat	ERC	A (m²)	R (m)	Site Status	Priority	N	E	S	W	N	E	S	W
16.5	1	740	Mature	Fair	Good	Good	Good	B.1.2	>40 yrs	247.8	8.88	Pre Construction		3	4	3	3	6	5	7	6

Survey Comment : Regularly pruned to maintain a compact form.

Tree Comment :

Tree ID : T7 **Tag :** **Assessor :** Jonathan Rodwell Cert Arb L4(ABC); TechArb **Bats :** No

Species : Copper Beech **TPO :** **Inspected :** 17 October 2024 **Cons Area :** Yes

Fagus sylvatica 'Purpurea'

Next Insp : Not Required

1st Branch: 2.5m; west

Stems				Health						RP			Clearance (m)				Spread (m)			
H (m)	No	Ø (mm)	Maturity	Crown	Stem	Basal	Phy Con	Cat	ERC	A (m²)	R (m)	Site Status	Priority	N	E	S	W	N	E	S	W
14.5	1	500	Mature	Fair	Good	Good	Good	B.1.2	>40 yrs	113.1	6	Pre Construction		3	3	4	2.5	5	3	4	6

Survey Comment : Regularly pruned to maintain a compact form.

Tree Comment :

Tree ID : T8 **Tag :** **Assessor :** Jonathan Rodwell Cert Arb L4(ABC); TechArb **Bats :** No

Species : Copper Beech **TPO :** **Inspected :** 17 October 2024 **Cons Area :** Yes

Fagus sylvatica 'Purpurea'

Next Insp : Not Required

1st Branch: 2.5m; west

Stems				Health						RP			Clearance (m)				Spread (m)			
H (m)	No	Ø (mm)	Maturity	Crown	Stem	Basal	Phy Con	Cat	ERC	A (m²)	R (m)	Site Status	Priority	N	E	S	W	N	E	S	W
15	1	840	Mature	Fair	Good	Good	Good	B.1.2	>40 yrs	319.2	10.07	Pre Construction		3	3	3	3	6	3	3	6

Survey Comment : Regularly pruned to maintain a compact form.

Tree Comment :

BS5837:2012 Assessment

Tree ID : T9 **Tag :** **Assessor :** Jonathan Rodwell Cert Arb L4(ABC); TechArb **Bats :** No

Species : Western Red Cedar **TPO :** **Inspected :** 17 October 2024 **Cons Area :** Yes

Thuja plicata

Next Insp : Not Required

1st Branch:

Estimated Measurements

Stems				Health						RP				Clearance (m)				Spread (m)			
H (m)	No	Eq Ø (mm)	Maturity	Crown	Stem	Basal	Phy Con	Cat	ERC	A (m²)	R (m)	Site Status	Priority	N	E	S	W	N	E	S	W
8	7	661	Mature	Fair	Fair		Good	B.1	20 to 40 yrs	197.9	7.93	Pre Construction		1	0.5	0.5	2	2	3	4	3

Survey Comment : Clipped tree in garden to the east.

Tree Comment :

Tree ID : T10 **Tag :** **Assessor :** Jonathan Rodwell Cert Arb L4(ABC); TechArb **Bats :** No

Species : Gleditsia 'Sunburst' **TPO :** **Inspected :** 17 October 2024 **Cons Area :** Yes

Gleditsia triacanthos 'Sunburst'

Next Insp : Not Required

1st Branch:

Stems				Health						RP				Clearance (m)				Spread (m)			
H (m)	No	Ø (mm)	Maturity	Crown	Stem	Basal	Phy Con	Cat	ERC	A (m²)	R (m)	Site Status	Priority	N	E	S	W	N	E	S	W
10.5	1	280	Mature	Good	Good	Good	Good	B.1	20 to 40 yrs	35.5	3.36	Pre Construction		2	2	1.5	1.5	4	3	2	3.5

Survey Comment :

Tree Comment :

Tree ID/tag -	Identification number and/or tree tag number.	
Species -	Common and/or scientific name.	
Height (m) -	To the nearest 0.5m below 10m; to the nearest 1m above 10m.	
Ø (mm)/No. of stems -	Stem diameter measured at 1.5m or equivalent with reference to Annex C of BS5837:2012.	
First branch -	Height above ground level and direction of first significant branch.	
Crown spread (m) -	Measured at the cardinal points.	
Canopy height/clearance -	Crown clearance in metres above ground level at the cardinal points.	
RPA -	Root protection area (m^2) and length of radial protection (m).	
Age class:	*Young* -	Less than approximately 10 years old.
	Semi-Mature -	Less than 1/5 of typical life expectancy.
	Mature -	Between 1/5 and 5/5 of typical life expectancy.
	Over-Mature -	Tree having reached its maximum life span and declining in health and size.
	Veteran -	A tree that is of interest biologically, aesthetically or culturally because of its age, size or condition.
Structural/physiological condition:	General condition of tree crown, stem and basal area structure and form - assessed as:	
	Good -	Good form, structure and vitality; no apparent signs of decay, structural weakness, decline in health, pests or diseases.
	Fair -	Moderate form and structure.
	Poor -	Poor form or structure; significant decay, structural weakness or decline in vitality.
BS 5837 category -	BS grading category detailed at Appendix 3.	
ERC -	Estimated remaining contribution.	

Trees Unsuitable for Retention

Category U	Trees in such a condition that they cannot realistically be retained as living trees in the context of the current land use for longer than 10 years – shown in dark red on plans.

Trees To Be Considered for Retention

Category A	Trees of high quality with an estimated remaining life expectancy of at least 40 years - shown in light green on plans.
	1 - Mainly arboricultural qualities – trees that are good examples of their species, especially if rare or unusual; or those that are essential components of groups, formal or semi-formal arboricultural features. *2 - Mainly landscape qualities* – trees, groups or woodlands of particular visual importance as arboricultural and/or landscape features. *3 - Mainly cultural values, including conservation* – trees, groups or woodlands of significant conservation, historical, commemorative or other value.
Category B	Trees of moderate quality with an estimated life expectancy of at least 20 years - shown in mid blue on plans.
	1 - Mainly arboricultural qualities – trees that might be included in category A but are downgraded because of impaired condition (e.g. presence of significant but remediable defects) to the extent that they are unlikely to be suitable for retention beyond 40 years; or trees lacking the particular quality necessary for category A designation. *2 - Mainly landscape qualities* – trees present in numbers, usually growing as groups or woodlands, that attract a higher collective rating than they might as individuals; or groups of trees situated so as to make little visual contribution to the wider locality. *3 - Mainly cultural values, including conservation* – trees with material conservation or other cultural values.

Appendix 3 – BS 5837 grading categories

Category C	Trees of low quality with an estimated remaining life expectancy of at least 10 years, or young trees with a stem diameter under 150mm - shown in grey on plans. *1 - Mainly arboricultural qualities* – unremarkable trees of very limited merit or such impaired condition that they do not qualify in higher categories. *2 - Mainly landscape qualities* – trees present in groups or woodlands but without this conferring on them significantly greater collective landscape value; and/or trees offering low or only temporary landscape benefits. *3 - Mainly cultural values, including conservation* – trees with no material conservation or other cultural values.

Beechdown Arboriculture Limited
Club Cottage, Slindon, Arundel BN18 0RP
Tel - 01243 814740 Mob - 07941 156492
Email - jonathan.rodwell@beechdown.com
Web - www.beechdown.com

Saunton
Appendix 4 - tree constraints plan

SCALE : 1 : 200 @ A3
DATE : 23/10/2024
N

Beechdown ref: B/0534/24
Saunton - BS 5837 tree survey & report - October 2024

Map data shown may contain Ordnance Survey ® products supplied by Pear Technology Services Ltd; Email: info@peartechnology.co.uk
© Crown Copyright and database rights from date shown above
Ordnance Survey ® licence number 100023148

Crown Spread
Root Protection Area
Shading Arc
Category 'A'
Category 'B'
Category 'C'
Category 'U'
0 15m

Cagefoot Lane

T1 B
T2 B
T3 B
T4 B
T5 B
T6 B
T7 B
T8 B
T9 B
T10 B

Gravel parking area
Tarmac driveway
Garage
Saunton
Studio
Paved areas

Key:

- Gravel parking area
- Lawns, borders & unsurfaced ground
- Timber outbuildings
- Studio & garage
- Site boundary
- Tarmac driveway
- Paved areas
- Existing dwelling
- Combined shade pattern

Beechdown Arboriculture Limited
Club Cottage, Slindon, Arundel BN18 0RP
Tel - 01243 814740 Mob - 07941 156492
Email - jonathan.rodwell@beechdown.com
Web - www.beechdown.com

Saunton
Appendix 5 - development proposal plan

SCALE :	DATE :	N
1 : 200 @ A3	23/10/2024	

Beechdown ref: B/0534/24
Saunton - BS 5837 tree survey & report - October 2024

Map data shown may contain Ordnance Survey ® products supplied by Pear Technology Services Ltd; Email: info@peartechnology.co.uk
© Crown Copyright and database rights from date shown above
Ordnance Survey ® licence number 100023148

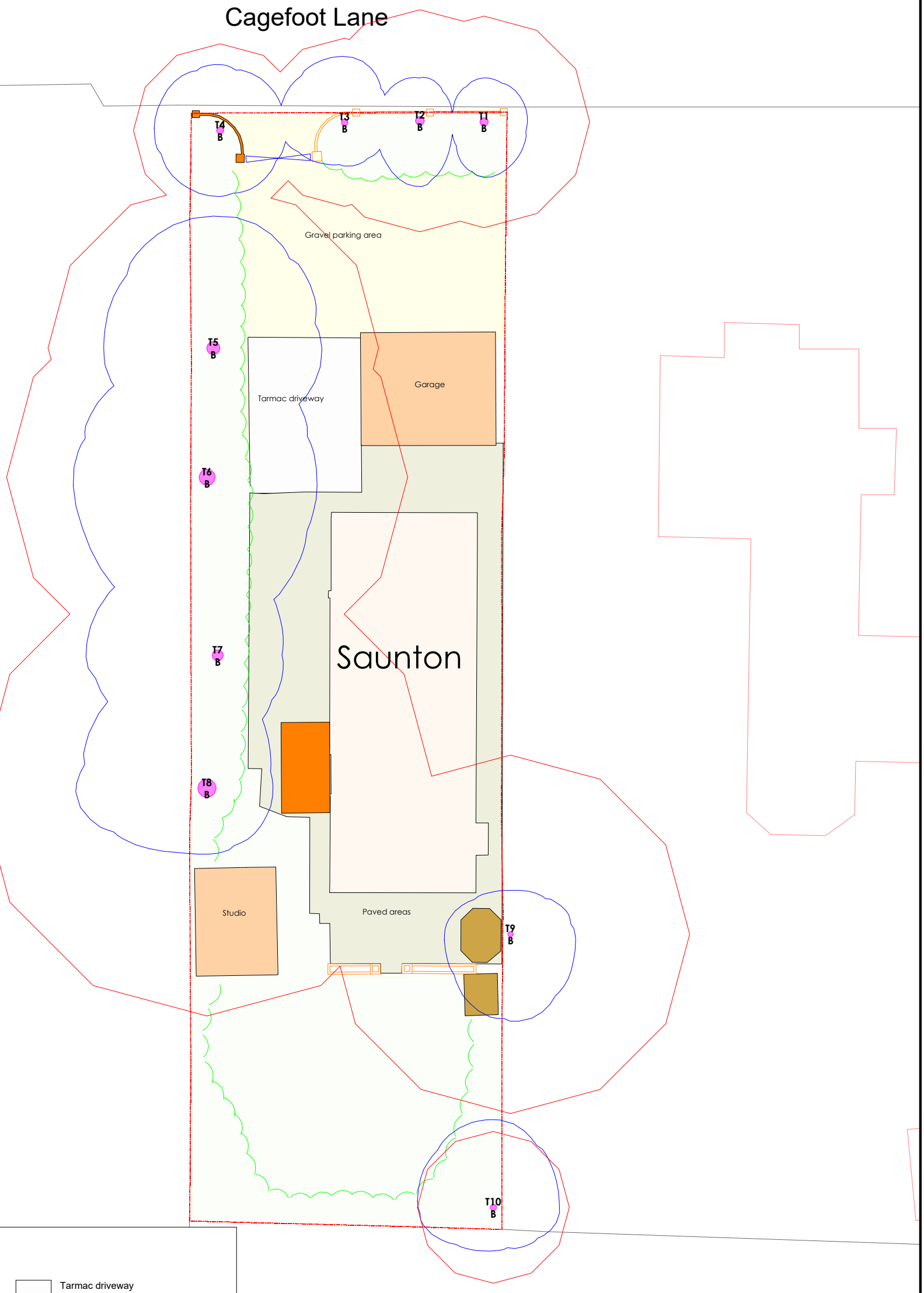

Beechdown Arboriculture Limited
Club Cottage, Slindon, Arundel BN18 0RP
Tel - 01243 814740 Mob - 07941 156492
Email - jonathan.rodwell@beechdown.com
Web - www.beechdown.com

Saunton
Appendix 6 - tree protection plan

SCALE : 1 : 100 @ A3	DATE : 23/10/2024	N
Beechdown ref: B/0534/24 Saunton - BS 5837 tree survey & report - October 2024		

Map data shown may contain Ordnance Survey ® products supplied by Pear Technology Services Ltd; Email: info@peartechnology.co.uk
© Crown Copyright and database rights from date shown above
Ordnance Survey ® licence number 100023148

T4 B
T3 B
T2 B
T1 B
Construction exclusion zone 2 - no access, storage, mixing materials or construction activity permitted.
Location of protective barriers - green broken line constructed as per appendix 7 - positioned to protect RPA and form the construction exclusion zone.
T5 B
Garage
T6 B
Compacted surface suitable for vehicle access, deliveries & removal of waste.
Construction exclusion zone 1 - no access, storage, mixing materials or construction activity permitted.
T7 B
Saunton
T8 B

Key:

- Gravel parking area
- Tarmac driveway
- Construction exclusion zone
- Existing dwelling
- Replacement porch & wall
- Protective barriers
- Combined crown spread
- Combined RPA

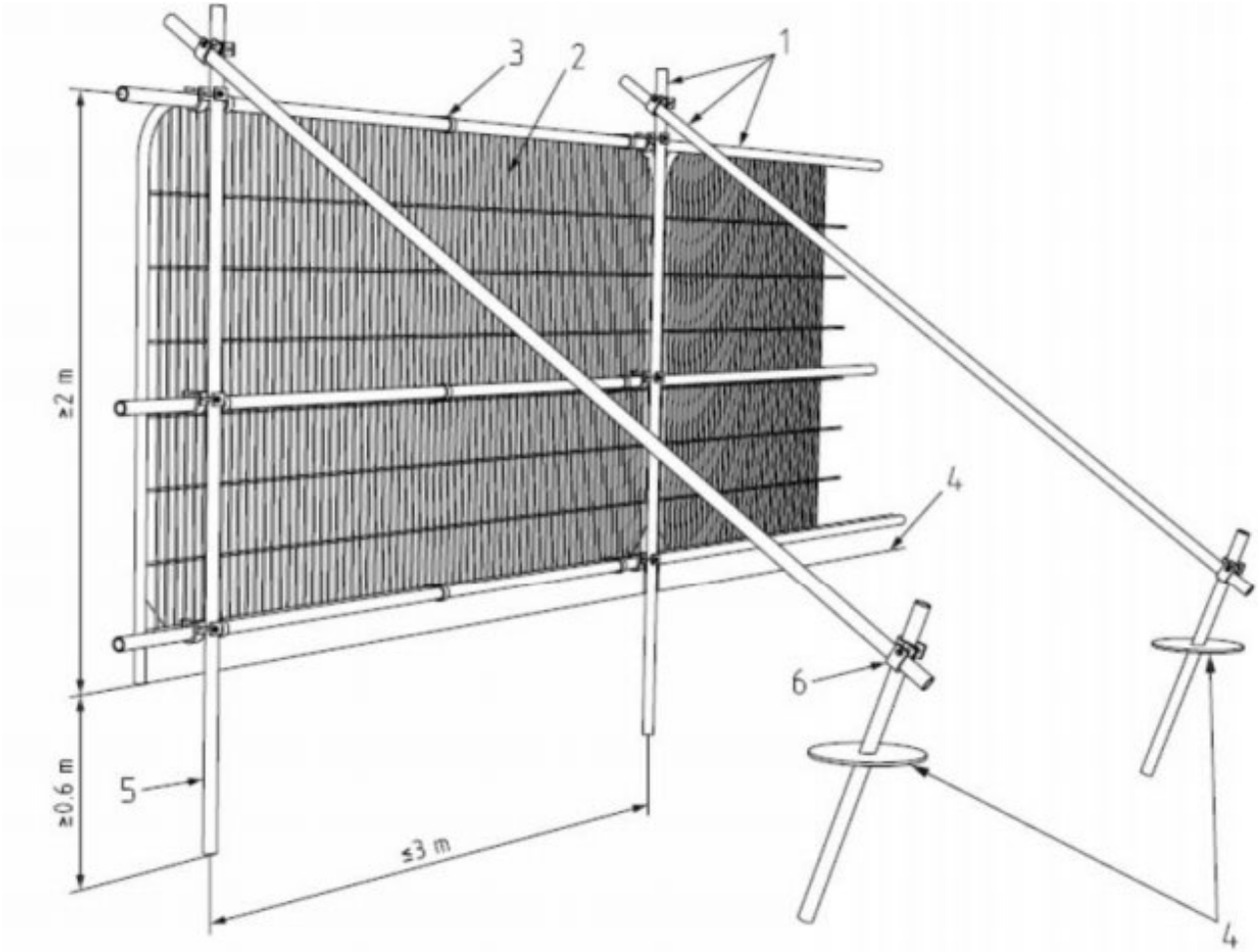

Key

1 Standard scaffold poles
2 Heavy gauge 2 m tall galvanized tube and welded mesh infill panels
3 Panels secured to uprights and cross-members with wire ties
4 Ground level
5 Uprights driven into the ground until secure (minimum depth 0.6 m)
6 Standard scaffold clamps

Default specification for protective barrier as per Figure 2 of *BS 5837:2012 Trees in relation to demolition and construction – Recommendations, Fourth (Present) Edition.* BSI

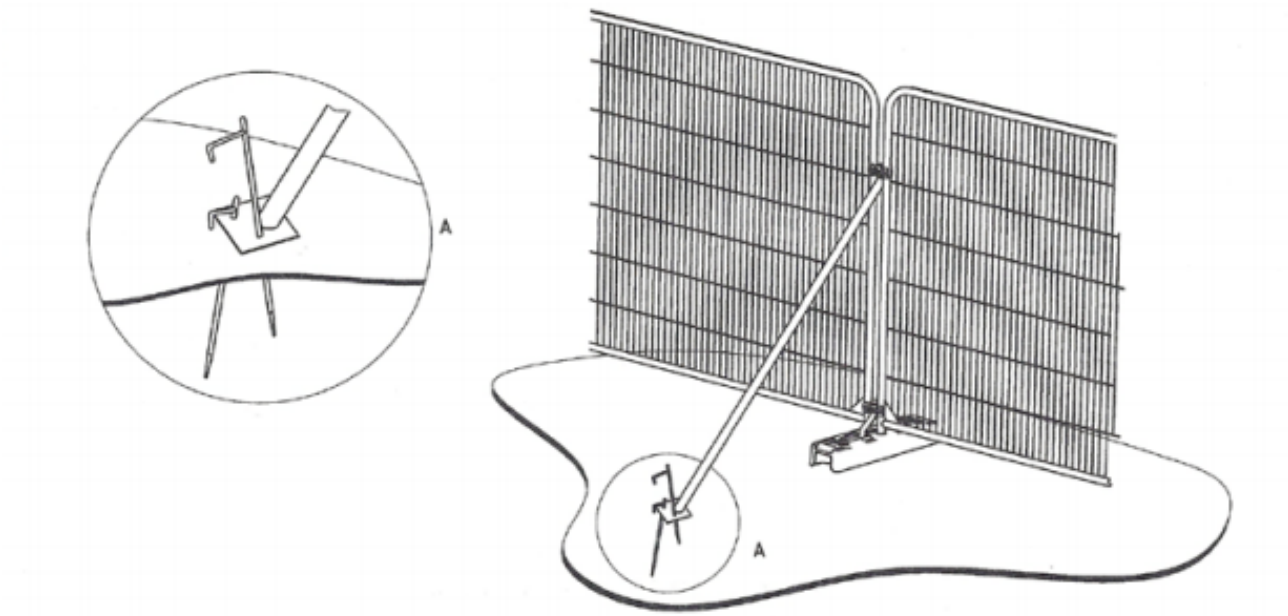

a) Stabilizer strut with base plate secured with ground pins

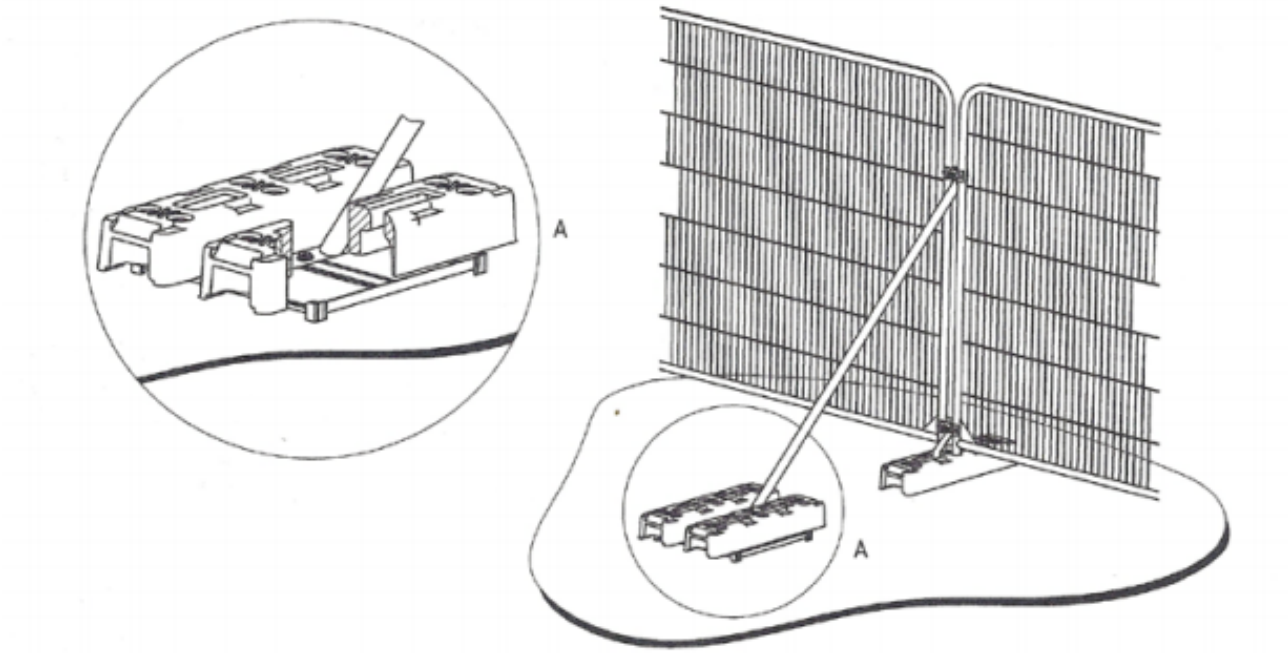

b) Stabilizer strut mounted on block tray

Examples of above-ground stabilising systems as per Figure 3 of *BS 5837:2012 Trees in relation to demolition and construction – Recommendations, Fourth (Present) Edition*. BSI

Client	Location
Andrew Ballard	Saunton, Cagefoot Lane, Henfield BN5 9HD

Local planning authority	Horsham District Council
Planning application	-
Development	Demolition of the existing entrance porch and construction of a larger enclosed porch in its place; construction of a car-port; installation of exterior lighting; construction of a new section of boundary wall; replacement of exterior doors and windows and rendering brickwork

Stage of development	Action required
Pre-construction	Mark position of protective barrier forming construction exclusion zone.

Notes	

Arboriculturalist	
Signed	
Date	

NOTE - COPY OF COMPLETED FORM TO BE SCANNED AND SENT TO LPA ARBORICULTURAL OFFICER

Client	Location
Andrew Ballard	Saunton, Cagefoot Lane, Henfield BN5 9HD

Local planning authority	Horsham District Council
Planning application	-
Development	Demolition of the existing entrance porch and construction of a larger enclosed porch in its place; construction of a car-port; installation of exterior lighting; construction of a new section of boundary wall; replacement of exterior doors and windows and rendering brickwork

Stage of development	Action required
Pre-construction	Check position of protective barrier forming construction exclusion zone.

Notes	

Arboriculturalist	
Signed	
Date	

NOTE - COPY OF COMPLETED FORM TO BE SCANNED AND SENT TO LPA ARBORICULTURAL OFFICER

Client	Location
Andrew Ballard	Saunton, Cagefoot Lane, Henfield BN5 9HD

Local planning authority	Horsham District Council
Planning application	-
Development	Demolition of the existing entrance porch and construction of a larger enclosed porch in its place; construction of a car-port; installation of exterior lighting; construction of a new section of boundary wall; replacement of exterior doors and windows and rendering brickwork

Stage of development	Action required
Construction	Arboricultural supervision of hand-excavation to locate piles within RPA for raft foundation and for shallow service trench.

Notes	

Arboriculturalist	
Signed	
Date	

NOTE - COPY OF COMPLETED FORM TO BE SCANNED AND SENT TO LPA ARBORICULTURAL OFFICER

Client	Location
Andrew Ballard	Saunton, Cagefoot Lane, Henfield BN5 9HD

Local planning authority	Horsham District Council
Planning application	-
Development	Demolition of the existing entrance porch and construction of a larger enclosed porch in its place; installation of exterior lighting & construction of a new section of boundary wall.

Area inspected	**Comments**	**Action required**
Protective barriers		
Construction exclusion zone		
Site storage/material mixing		
Other		
Additional Comments		

Arboriculturalist	
Signed	
Date	

NOTE - COPY OF COMPLETED FORM TO BE SCANNED AND SENT TO LPA ARBORICULTURAL OFFICER