SIDE ELEVATION

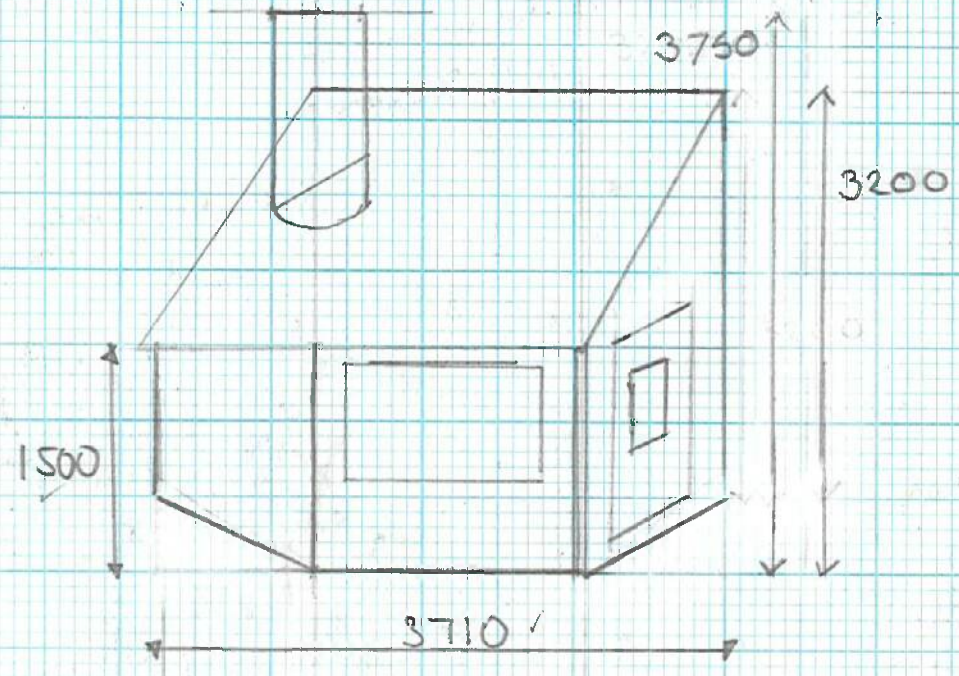

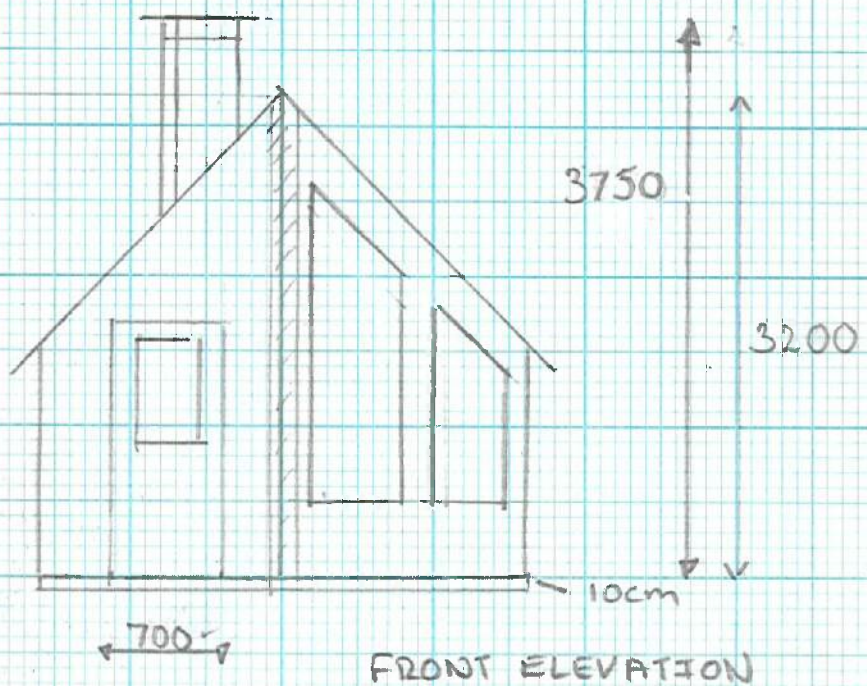

FRONT ELEVATION

The building is on 100mm high decking

Scale 1:50

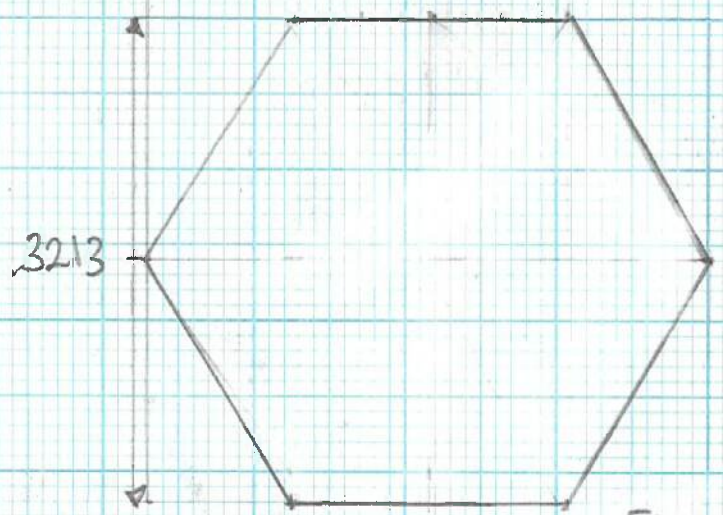

FLOOR PLAN

GARDEN BUILDING

48 BROADWOOD CLOSE
HORSHAM
WEST SUSSEX
RH12 4JY

V2