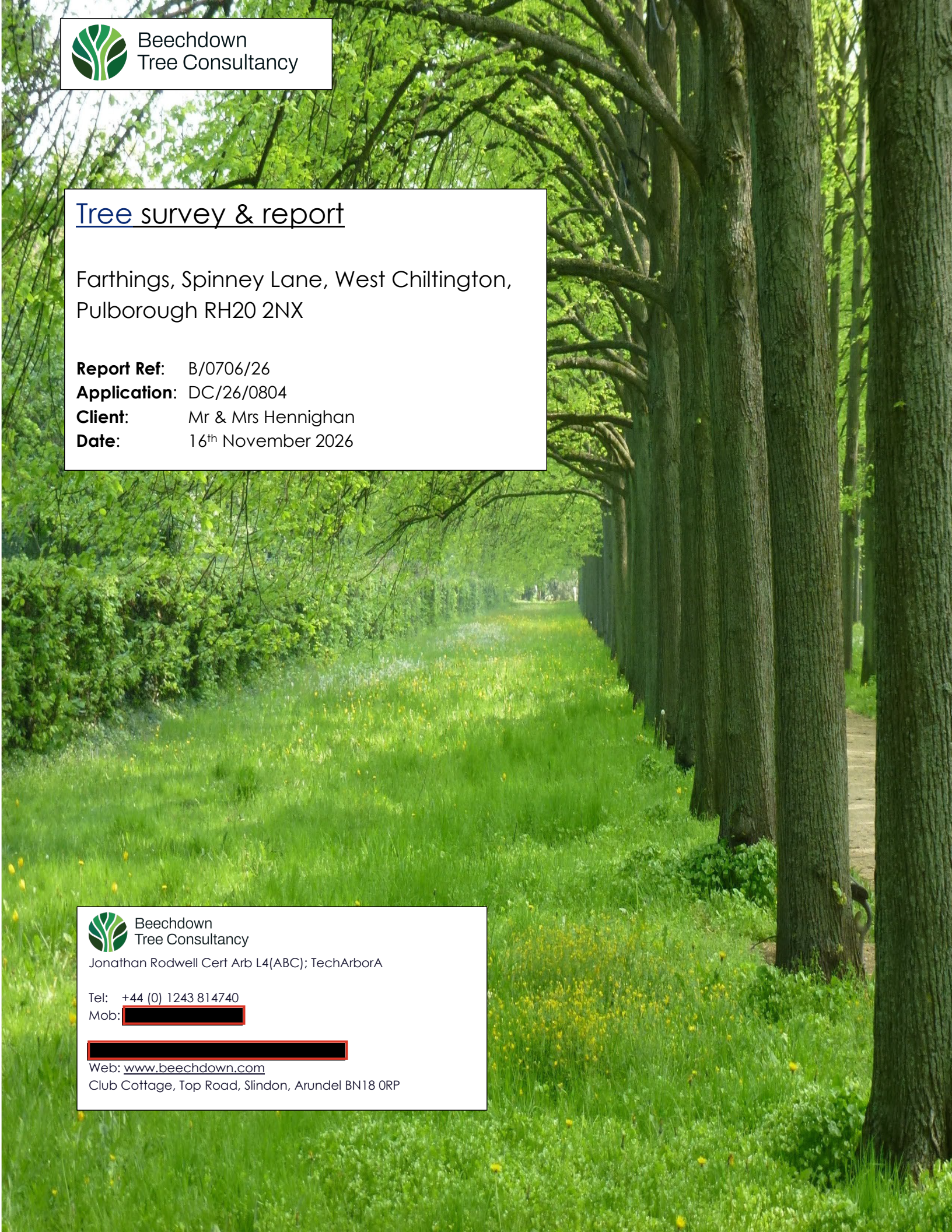

Beechdown
Tree Consultancy

# Tree survey & report

Farthings, Spinney Lane, West Chiltington, Pulborough RH20 2NX

**Report Ref**: B/0706/26
**Application**: DC/26/0804
**Client**: Mr & Mrs Hennighan
**Date**: 16th November 2026


Beechdown
Tree Consultancy
Jonathan Rodwell Cert Arb L4(ABC); TechArborA

Tel: +44 (0) 1243 814740
Mob: [redacted]

[redacted]
Web: www.beechdown.com
Club Cottage, Top Road, Slindon, Arundel BN18 0RP

Beechdown
Tree Consultancy

## CONTENTS


| | | |
|---|---|---|
| - | Summary, details and references | 1 |
| 1.0 | Introduction | 2 |
| 2.0 | Documents provided | 2 |
| 3.0 | Survey format | 3 |
| 4.0 | Grading categories | 3 |
| 5.0 | Legislation | 3 |
| 6.0 | Development proposal | 4 |
| 7.0 | Site description | 4 |
| 8.0 | Tree survey | 5 |
| 9.0 | Tree appraisal | 5 |

**Arboricultural Impact Assessment** **6**

| | | |
|---|---|---|
| 10.0 | Below ground constraints – Root protection area (RPA) | 6 |
| 11.0 | Above ground constraints | 6 |
| 12.0 | Comment | 7 |
| 13.0 | Conclusion | 7 |

**Arboricultural Method Statement** **8**

| | | |
|---|---|---|
| 14.0 | Responsibilities | 8 |
| 15.0 | Site preparation | 9 |
| 16.0 | Protective barriers & construction exclusion zone | 9 |
| 17.0 | Foundation construction | 10 |
| 18.0 | Infrastructure requirements | 11 |
| 19.0 | Additional precautions | 11 |
| 20.0 | Supervision & monitoring | 11 |


**Appendices:**
**1- Tree survey schedule. 2 - Definition of terms. 3 - BS 5837 grading categories. 4 - Tree constraints plan. 5 - Development proposal plan. 6 - Tree protection plan. 7 - Protective barriers. 8- Site visit and arboricultural supervision record. 9 - Arboricultural monitoring.**

Beechdown
Tree Consultancy

## SUMMARY


- The quality of 19 trees within potential influence of proposed development was categorised and an arboricultural impact assessment prepared;
- the proposal is for the construction of a new garage, extended driveway and new access point from Spinney Lane.
- the proposed development will require the removal of three category B trees but retained boundary trees means their loss will have little visual impact from beyond the garden and with the majority of trees retained the overall arboricultural characteristics of the site will remain largely unchanged;
- precautionary measures will be required to protect the key retained trees throughout the development process.


## Details

- Survey dates - 9th October & 13th November 2026
- Present at survey - Jonathan Rodwell Cert Arb L4(ABC); TechArborA
- Date of report - 17th November 2026

## Contact Details

| | | |
|---|---|---|
| Local Planning Authority | Horsham District Council | **Tel** – 01403 215187<br>**Email** – [redacted] |
| Architects | Carl Moore Architectural Design | **Tel –** [redacted]<br>**Email** – [redacted] |

### References


**Roberts, J. Jackson, N. Smith, M.** (2006). *Tree Roots in the Built Environment.* The Stationery Office

**BSI British Standards** (2012) *BS 5837:2012 Trees in relation to demolition and construction – Recommendations, Fourth (Present) Edition.* BSI



Beechdown
Tree Consultancy

**Jonathan Rodwell Cert Arb L4(ABC); TechArborA**

**Tel:** +44 (0) 1243 814740
**Mob:** [redacted]
**Email:** [redacted]
**Web:** www.beechdown.com


17th November 2026

## 1.0 Introduction

1.1 I have received instruction from Mark Hennighan, to report on arboricultural matters in relation to proposed development at Farthings, Spinney Lane, West Chiltington, Pulborough RH20 2 NX.

1.2 The purpose of the instruction was to:

- Assess the quality of any trees that could be affected by construction of the new garage, extended driveway & new entrance from Spinney Lane.
- Prepare an arboricultural impact assessment evaluating the effects of the development proposal.
- Prepare a method statement and tree protection plan with regard to key trees on site.

1.3 The survey was conducted and the report prepared with reference to the guidelines detailed in BS 5837:2012 "Trees in relation to design, demolition and construction – Recommendations" and according to good arboricultural practice. Contents of the report are exclusively for the use of the client; liability does not extend to any third party without our written consent.

1.4 ***Qualifications and experience*** – I am a qualified arboriculturist and Technician Member of the Arboricultural Association with more than 35 years' experience working with trees. I have a National Certificate in Arboriculture, the ABC Level 4 Certificate in arboriculture and the LANTRA Professional Tree Inspection Certificate along with certificates of training/attendance including arboricultural consultancy & report writing, veteranisation/microhabitat creation, valuing & managing veteran trees, subsidence investigation, assessment of tree forks, instrumental tree assessment, mortgage reports and risk assessment for commercial arboriculture.

## 2.0 Documents Provided

2.1 Drawings provided by Carl Moore Design:

| | | |
|---|---|---|
| HM-290-05D | Extensions & garage | 1:100@A1 |

## 3.0 Survey Format

3.1 Trees included in the survey were those with the potential to be affected by the development proposal and with a stem diameter, at 1.5m high, greater than 75mm. The trees were inspected from the ground only and no specialist decay detection was undertaken. Trees were assessed from within the site or from public areas.

3.2 The tree identification numbers used are for the purpose of this report and may not reflect numbering used in previous surveys or inspections.

3.3 Data was recorded digitally; the individual trees plotted via GPS and their positions marked on the 1:250 @ A3 tree constraints plan (Appendix 4).

3.4 A detailed tree survey sheet is shown as Appendix 1 with an explanation of the terms and categories covered as Appendix 2.

3.5 The extent of the survey was limited to collecting sufficient data to inform upon the feasibility of the proposed development in relation to the new access, driveway and garage, it was not a detailed tree hazard or risk assessment and, unless specified, no guarantee, expressed or implied, can be given regarding the safety of the trees or their suitability for safe long-term retention.

## 4.0 Grading Categories

4.1 The quality of the surveyed trees was assessed and they were categorised to reflect the criteria recommended in Table 1 of BS 5837:2012 as detailed at Appendix 3.

4.2 The following is a breakdown of the number of trees in each BS category.

| | |
|---|---|
| Category U | 0 trees |
| Category A | 1 tree |
| Category B | 10 trees |
| Category C | 8 trees |

## 5.0 Legislation

5.1 ***Tree Preservation Orders & Conservation Areas*** - Local Planning Authority (LPA) online mapping showed that the application site is within the West Chiltington Lanes conservation area and that the recorded English oak (T13) in the garden

of Springfield to the east may be subject to the 1967 tree preservation order no. **TPO/0156**.

5.2 ***Ancient Semi-Natural Woodland*** **(ASNW)** –Local Planning Policy – consistent with the National Planning Policy Framework - will refuse planning applications that result in the loss or deterioration of irreplaceable habitats such as ancient woodland or veteran trees. The application site has no veteran trees and the nearest ASNW is at Perrett's Copse over 100m to the south-west.

5.3 ***Wildlife legislation*** – under Part 1 of the Wildlife and Countryside Act (1981), with only a few exceptions, it is an offence to intentionally take, damage or destroy the nest of any wild bird while the nest is in use or being built. Bat species are protected under Section 39 of the 1994 Conservation (Natural Habitats etc.) Regulations (as amended), the 1981 Wildlife and Countryside Act (as amended) and the 2000 Countryside and Rights of Way Act. It is illegal to damage or destroy any bat roost, whether occupied or not, or disturb or harm a bat. Further specialist investigation may be required before undertaking any recommended works.

## 6.0 Development Proposal

6.1 The application (DC/26/0804) seeks consent for the demolition of the existing garage, construction of a single-storey side extension, installation of a rear dormer, roof alterations to replace the shallow rear pitch, and the erection of a detached garage. This report addresses only the elements relating to the new detached garage, the extended driveway, and the creation of an additional access point from Spinney Lane.

## 7.0 Site Description

7.1 Farthings is a two-storey detached Wells Cottage constructed in the 1920s and set in gardens of around 1000m² with a detached single garage and timber outbuilding. The grounds are fairly level around the cottage and rise slightly to the south-east corner. Access from Spinney Lane is via a gravel driveway that widens into a parking area in front of the garage & house. A post & rail fence extended along the roadside boundary with a clipped, mixed species hedge of beech, laurel, shining honeysuckle & rhododendron on the garden side.

7.2 The property is in a suburban/semi-rural location with open farmland, woods and heathland to the south & west. The wider landscape includes individual trees or small groups as roadside trees, in domestic settings, mixed species woodland and in hedgerows along field margins.

7.3 The British Geological Survey records the site geology as Folkestone Formation sandstone sedimentary bedrock while the superficial geology is described by the UK Soil Observatory (www.ukso.org) as a freely draining, very acid, sandy & loamy soil. No detailed analysis of the soil structure, composition or pH was undertaken and these details should not be relied on for design purposes.

## 8.0 Tree Survey

8.1 The recorded trees were in the gardens at Farthings and Springfield beyond the eastern boundary. Trees and shrubs that were too small to be recorded or beyond influence of the development proposal included borders of laurel & rhododendron throughout the garden; *Garrya*, *Weigela*, *Cotoneaster*, firethorn, hazel, strawberry tree, plum, *Amelanchier*, *Ribes*, barberry & *Viburnum* in a wide border that extends in an arc from the driveway, inside the roadside hedge, to the south-west corner of the garden; rhododendron, *Choisya* & hazel grouped among the recorded trees in the south-east corner; laurel, rhododendron, holly & English oak in the garden of Springfield and a clump of bamboo in the north-east corner of the garden at Owl Becks.

## 9.0 Tree Appraisal

9.1 Details and comments of individual trees and groups are listed in the appended BS 5837 survey schedule detailed at Appendix 1. Details of the trees that I consider require further explanation or comment are noted below.

- **Ash** (T10) – a poor-quality tree with no direct impact on the proposed garage. However, it would be prudent to remove the tree before construction commences, while site access remains unrestricted.
- **English oak** (19) – a fungal fruiting body of *Fistulina hepatica* was present between buttress roots on the west side of the tree; *F. hepatica* is a wood colonising fungus that acts saprotrophically on dysfunctional wood causing a brown rot and slow degradation of timber leading hollowing; the decay process develops gradually over a long period of time and although considered largely benign can eventually lead to embrittlement and structural failure when advanced. Construction of the garage takes place beyond the tree's nominal RPA but it would be sensible to plan for further technical assessment i.e. sonic tomography & biomechanical evaluation to establish the pattern of decay and its effects on overall tree structure.

## 10.0 Below Ground Constraints – Root Protection Area (RPA)

10.1 Section 3.7 of BS 5837: 2012 states that – "*The Root Protection Area (RPA) is a layout design tool indicating the minimum area around a tree deemed to contain sufficient roots and rooting volume to maintain the tree's viability, and where the protection of the roots and soil structure is treated as a priority.* "

10.2 The RPA calculations have been produced using the information gathered from the tree survey and section 4.6.1 of BS 5837:2012. This indicates the RPA in m² and the minimum required all round radial distances for rooting zone protection and allows a view to be taken as to whether the trees can be retained safely without undue damage to their root systems. The RPA calculations are detailed in the appended tree survey and the initial dimensions marked on the 1:250 @ A3 tree constraints plan (Appendix 4).

10.3 Tree root morphology can be affected by numerous factors; availability of water, aeration, soil type, temperature and structure, compacted or impervious surfaces and proximity to buildings and other structures all affect the way roots develop and although the RPAs are marked on the plan as uniform polygons the actual root systems will be far more irregular. Root mapping or hand excavation under arboricultural supervision could determine whether structural roots or root masses & likely mycorrhizal associations extend beyond the RPAs and require greater protection in relation to construction or whether it may be possible to develop within the RPA without a significant impact on the rooting environment.

10.4 With the exception of the English oak the recorded trees are growing in unsurfaced ground and with no obvious structural constraints to root development. The oak is likely to pre-date the cottage and it is difficult to predict what effect construction of the cottage will have had on its root development so as a design layout tool the nominal RPAs are a reasonable representation.

## 11.0 Above Ground Constraints

11.1 Consideration should be given to the effects that the current tree size, future growth potential, shade levels and leaf and fruit nuisance may have on the proposed development. Tree height and crown spread measurements are detailed in the appended tree survey; the crown spread of the trees and the shadow pattern through the main part of the day is indicated on the 1:250 @ A3 tree constraints plan (Appendix 4).

## 12.0 Comment

12.1 The 1:200 @ A3 proposed development plan (Appendix 5) shows that construction of the extended driveway and new garage impacts directly on the nominal RPAs of the Category B apple (T8), Lawson cypress (T12) & Sawara cypress (T15). Removal of these three trees means the position of the proposed garage will have no direct impact on any of the other retained trees – most importantly the Category A English oak (T19), off-site trees in the garden of Springfields and the prominent Scots pine (T4).

12.2 With the position of the garage outside the nominal RPA of retained trees initial foundation design should allow for a continuous strip footing. Roots from the removed apple & cypresses will inevitably be present during excavation but arboricultural supervision will establish whether the presence of significant roots of retained tree species – holly or English oak – make continuous strip footings unsuitable, in which case the foundation design may need to be revised to a strap footing with lintels or cantilevered beams bridging the roots.

12.3 Construction of the new access from Spinney Lane has no direct impact on any recorded trees but will require the removal of a section of roadside hedge and mixed species shrubs in the border beyond.

12.4 General construction practices have the potential to damage trees if not carefully managed . The key to successful construction with no adverse impact on the condition and health of the retained trees will be a carefully sequenced approach with appropriate tree protection.

12.4 Delivery of materials and removal of waste will be via the existing and extended driveway – the compacted driveway surface will be suitable for the anticipated level of construction traffic.

## 13.0 Conclusion

13.1 The development proposal will require the removal of the three Category B trees but with boundary trees retained will have little visual impact from beyond the garden at Farthings. I do not consider current or future growth of the retained trees to have a greater impact on the development proposal than on the existing house and garden. Precautionary measures will prevent construction related damage and adverse effects on the current and long-term health of the key retained trees.

## ARBORICULTURAL METHOD STATEMENT

- This method statement sets out the procedures to be followed for general construction practices around trees.
- The purpose is to ensure that works are undertaken in a manner that prevents unacceptable damage to tree roots, soil structure and overall tree health.
- The development process must follow a sequence that results in the least risk to the retained trees and with tree protective fencing and exclusion zones in place as per the tree protection plan (TPP).
- The arboricultural method statement includes the following tree protection plans.

| | | |
|---|---|---|
| **Appendix 6** *tree protection plans* | 1:200@A3 | • Tree protection plans showing position of protective barriers and construction exclusion zones. |

## 14.0 Responsibilities

14.1 **Site manager/main contractor** – responsible for implementing this method statement, ensuring all operatives are briefed and that relevant works are carried out under arboricultural supervision.

14.2 **Project arboriculturalist** – to be present during any relevant works that impact directly on the RPA and to document compliance.

14.3 **Site operatives** – comply with method statement, follow root protection procedures and keep clear of construction exclusion zones.

14.4 Sequence of events, tree protection and precautionary measures in relation to phases of development.

**Pre-construction:**

- Site manager, project arboriculturalist and main contractor to review method statement;
- project arboriculturalist to identify construction exclusion zones and mark position of protective barriers;

- project arboriculturalist to check position of protective barrier forming construction exclusion zone prior to work commencing.

**Construction:**

- Construction of garage (arboricultural supervision of initial excavation);
- arboricultural monitoring at intervals agreed with LPA.

## 15.0 Site Preparation

15.1 Before site work commences the Category B apple (T8) & cypresses (T12 & T15) along with sections of the roadside hedge and rhododendron, laurel, *Choisya,* hazel & poor quality ash (T10) in the south-east corner of the garden should be cleared.

## 16.0 Protective Barriers & Construction Exclusion Zone

16.1 Prior to the commencement of construction work and before any machinery or materials are brought onto the site, protective barriers, marked as **a green broken line** on the tree protection plans (Appendix 6), must be erected, around the vulnerable Root Protection Area (RPA) to create a construction exclusion zone beyond the working area.

16.2 The construction exclusion zone, shown as **purple hatched shading** on the tree protection plan, will be afforded protection at all times during the development process; strictly no access, excavation, changes in soil levels, construction activities, mixing materials or storage will be allowed.

16.3 The barrier will have weather proof signs attached stating that it is protecting a **construction exclusion zone** and that **no works are permitted** beyond the barrier; the protective barrier must remain in place for the duration of the development process.

16.4 The protective barriers must be positioned in accordance with the tree protection plans and would typically be constructed as per figure 2 of BS 5837:2012 (shown at Appendix 7) and consist of a vertical and horizontal scaffold framework, well braced to resist impacts with vertical tubes spaced at a maximum interval of 3m and driven securely into the ground and onto which weld mesh panels would be fixed with wire or scaffold clamps. Care should be taken when locating the vertical and bracing poles to avoid roots; if the presence of roots or hard surfaces precludes the use of driven poles, above ground stabilising using struts mounted on a block tray, constructed as per figure 3 b) of BS 5837:2012 may be used.

- ***Construction exclusion zone 1 –*** formed of four weld mesh panels positioned between the southern boundary and dense vegetation on the west boundary to prevent access to the RPA of trees T4-T7.
- ***Construction exclusion zone 2 –*** formed of five weld mesh panels positioned between the southern boundary and the terrace by the cottage and preventing access to the unsurfaced RPA of retained trees on the eastern boundary.

16.5 Temporary ground protection, shown as **pale blue shading** at Appendix 6, will need to be positioned over the unsurfaced RPA between the protective barrier and the garage to allow room for access & construction but ensuring that the vulnerable RPA remains intact. 2.4m by 1.2m heavy duty access mats bearing on 150mm depth of woodchips spread over a geotextile membrane and pinned in place to prevent slipping will provide appropriate protection for the anticipated level of access needed and prevent any compaction of the soil.

## 17.0 Foundation Construction

17.1 Foundation depth should be determined by the architect or a structural engineer and with reference to NHBC Chapter 4.2 – Building near trees.

17.2 Excavation and construction of foundations for the garage takes place beyond the nominal RPA of retained trees. Tree roots within the soil profile are likely to include those of the removed apple and cypresses. Initial excavation must be carried out under arboricultural supervision where root identification (with reference to **Moldestad, K. Lundetræ, O.** (2023). *Roots, a Field Guide for Identification.* Arboricultural Association) will establish whether the presence of roots of retained trees means that the following precautions need to be adopted:

- Careful use of hand tools will avoid bark damage of retained roots at the edge of the foundation if present;
- exposed roots or fibrous root masses that are to be retained must be immediately covered – with hessian or similar - to prevent drying;
- individual roots less than 25mm diameter that need to be removed will be cleanly severed, with secateurs or a pruning saw, far enough back from the edge of the foundation (>100mm) that the effects of uncured cement do not impact tree health;
- the project arboriculturalist will determine whether it is possible to sever roots greater than 25mm diameter, whether bridging with a lintel may be possible or if an alternative foundation type is necessary;

- use of impermeable membranes to line the excavations before the concrete is poured will help prevent damage by the alkaline properties of cement.

## 18.0 Infrastructure Requirements

18.1 Undisclosed siting of service runs, above ground services, CCTV cameras, electrical sub-stations, refuse stores, lighting and other infrastructure requirements can lead to unnecessary tree pruning or root loss during or post development. Should any infrastructure requirements become necessary post planning their design should be discussed with the project arboriculturalist and, if necessary, the permission of the local planning authority obtained.

## 19.0 Additional Precautions

19.1 No storage or mixing of materials to take place within the construction exclusion zone or in the ground protected RPA.

19.2 No storage or mixing of materials will take place in any location where they may leak into the construction exclusion zone, RPA or buffer zone.

19.3 Materials which may contaminate the soil will not be discharged within 10m of the tree stems or mixed in any location where gradients allow contaminants to run towards RPAs or the buffer zone.

## 20.0 Supervision and Monitoring

20.1 It will be the responsibility of the main contactor to ensure that any conditions attached to the planning consent are adhered to at all times and that a monitoring regime with regard to tree protection on site is adopted.

20.2 An arboriculturalist should be appointed to monitor tree protection measures and address any arboricultural issues that may arise.

20.3 The project arboriculturalist should mark the positions of the protective barriers and inspect them once erected and prior to site work commencing.

20.4 In addition to any scheduled supervision, regular site visits to inspect the protective barriers may be required at appropriate intervals. Frequency of the visits is dependent on the progress of the development but typically would be at monthly intervals. The level/frequency of monitoring will be agreed with the LPA at the pre-start meeting.

20.5 A copy of a site visit and arboricultural supervision record is shown at Appendix 8.

20.6 A copy of an arboricultural monitoring record is shown at Appendix 9.

20.7 The main contractor will be responsible for ensuring subcontractors comply with the arboricultural method statement and do not undertake any operation that is likely to impact adversely upon any tree on site.

20.8 The main contractor will ensure that the build sequence is appropriate to ensure that no damage occurs to the trees during the development process.

.

# BS5837:2012 Tree Survey


**Beechdown Tree Consultancy**

Club Cottage, Top Road
Slindon
Arundel
West Sussex
BN18 0RP
Phone: 01243 814740


Client: Mr & Mrs Hennighan
Project: Farthings
Survey Date: 09/10/2026 - 13/11/2026
Surveyor: Jonathan Rodwell Cert Arb L4(ABC); TechArborA

| Tree and Tag No / Species | Hght (m) | Stems No | Stems Ø (mm) | Crown Spread (m) | Crown Clear (m) | Age | RP A (m²) R (m) | Phys Condition | Structural Condition | Preliminary Recommendations / Survey Comment | Cat ERC |
|---|---|---|---|---|---|---|---|---|---|---|---|
| T1 | | | | | | | | | | | |
| Yew<br>*Taxus baccata* | 6.5 | 1 | 375 | N 3<br>E 3<br>S 3<br>W 3 | 3<br>3<br>2.5<br>2.5 | SM | A: 63.6<br>R: 4.49 | Decline | C: Fair<br>S: Good<br>B: Good | Very sparse foliage but not obvious apical dieback. | C.1<br><10 yrs |
| T2 | | | | | | | | | | | |
| Norway Maple<br>*Acer platanoides* | 4.5 | 2 | 120 (Eq) | N 1<br>E 1.5<br>S 1.5<br>W 1 | 2<br>2<br>1<br>1 | Y | A: 6.6<br>R: 1.44 | Good | C: Fair<br>S: Good<br>B: Good | Maintained as a pollard. | C.1<br>10 to 20 yrs |
| T3 | | | | | | | | | | | |
| Goat Willow<br>*Salix caprea* | 4.5 | 2 | 86 (Eq) | N 1<br>E 1.5<br>S 1<br>W 1.5 | 1.5<br>1.5<br>1<br>1.8 | Y | A: 3.3<br>R: 1.02 | Good | C: Fair<br>S: Fair<br>B: Fair | | C.1<br>10 to 20 yrs |
| T4 | | | | | | | | | | | |
| Scots Pine<br>*Pinus sylvestris* | 23 | 1 | 870 | N 5<br>E 6<br>S 5<br>W 5 | 9<br>3<br>4<br>7 | M | A: 342.5<br>R: 10.44 | Good | C: Good<br>S: Good<br>B: Good | | B.1.2<br>20 to 40 yrs |

**Age Classifications:** N Newly planted; Y Young; SM Semi-mature; EM Early Mature; M Mature; OM Over Mature

**Condition:** C Crown; S Stem; B Basal area

**Stems:** Ø Diameter; (Eq) Equivalent stem diameter using BS5837:2012 definition

**ERC:** Estimated Remaining Contributio

| Tree and Tag No<br>Species | Hght (m) | Stems<br>No | Stems<br>Ø (mm) | Crown<br>Spread (m) | Crown<br>Clear (m) | Age | RP<br>A (m²)<br>R (m) | Phys Condition | Structural Condition | Preliminary Recommendations<br>Survey Comment | Cat<br>ERC |
|---|---|---|---|---|---|---|---|---|---|---|---|
| T5 | | | | | | | | | | | |
| Holly<br>*Ilex aquifolium* | 7.5 | 1 | 195 | N 3<br>E 1<br>S 1.5<br>W 2 | 3<br>4<br>3<br>2 | M | A: 17.2<br>R: 2.33 | Good | C: Fair<br>S: Fair<br>B: Fair | Top of tree removed to clear power lines. | **C.1.2**<br>20 to 40 yrs |
| T6 | | | | | | | | | | | |
| Norway Spruce<br>*Picea abies* | 18 | 1 | 410 | N 2.5<br>E 3<br>S 2.5<br>W 2 | 3<br>4<br>3<br>2 | M | A: 76.1<br>R: 4.92 | Good | C: Good<br>S: Ivy<br>B: Fair | Branches removed or shortened to clear power lines. | **B.1.2**<br>20 to 40 yrs |
| T7 | | | | | | | | | | | |
| Pacific Dogwood<br>*Cornus nuttallii* | 4.5 | 1 | 125 | N 2.5<br>E 2<br>S 2<br>W 2 | 1.8<br>2<br>2<br>2.5 | M | A: 7.1<br>R: 1.5 | Good | C: Good<br>S: Fair<br>B: Fair | | **C.1**<br>10 to 20 yrs |
| T8 | | | | | | | | | | | |
| Apple<br>*Malus Spp.* | 5.5 | 1 | 180 | N 2<br>E 3<br>S 3.5<br>W 3.5 | 2<br>2<br>2<br>2 | M | A: 14.7<br>R: 2.16 | Good | C: Good<br>S: Good<br>B: Good | | **B.1**<br>20 to 40 yrs |
| T9 | | | | | | | | | | | |
| Apple<br>*Malus Spp.* | 4.5 | 2 | 92 (Eq) | N 2<br>E 1.5<br>S 1.5<br>W 1 | 1.5<br>1<br>1.5<br>1 | SM | A: 3.8<br>R: 1.09 | Good | C: Good<br>S: Good<br>B: Good | | **C.1**<br>20 to 40 yrs |
| T10 | | | | | | | | | | | |
| Ash<br>*Fraxinus excelsior* | 15 | 2 | 311 (Eq) | N 2.5<br>E 1.5<br>S 2.5<br>W 2 | 4<br>7<br>5<br>5 | SM | A: 43.8<br>R: 3.73 | Fair | C: Poor<br>S: Fair<br>B: Fair | Shortened to a low framework but main ascending stem remains. | **C.1**<br><10 yrs |

**Age Classifications:** N Newly planted; Y Young; SM Semi-mature; EM Early Mature; M Mature; OM Over Mature

**Condition:** C Crown; S Stem; B Basal area

**Stems:** Ø Diameter; (Eq) Equivalent stem diameter using BS5837:2012 definition

**ERC:** Estimated Remaining Contributio

| Tree and Tag No<br>Species | Hght (m) | Stems<br>No | Stems<br>Ø (mm) | Crown<br>Spread (m) | Crown<br>Clear (m) | Age | RP<br>A (m²)<br>R (m) | Phys Condition | Structural Condition | Preliminary Recommendations<br>Survey Comment | Cat<br>ERC |
|---|---|---|---|---|---|---|---|---|---|---|---|
| T11 | | | | | | | | | | | |
| Holly<br>*Ilex aquifolium* | 12 | 2 | 228 (Eq) | N 2<br>E 2<br>S 2<br>W 2 | 1<br>1<br>1<br>2.5 | SM | A: 23.5<br>R: 2.73 | Good | C: Good<br>S: Good<br>B: Good | | **B.1**<br>20 to 40 yrs |
| T12 | | | | | | | | | | | |
| Lawson Cypress<br>*Chamaecyparis lawsoniana* | 17 | 1 | 510 | N 2<br>E 4<br>S 3<br>W 4 | 8<br>6<br>5<br>3 | M | A: 117.7<br>R: 6.12 | Good | C: Good<br>S: Good<br>B: Good | | **B.1**<br>20 to 40 yrs |
| T13 | | | | | | | | | | Estimated Measurements | |
| English Oak<br>*Quercus robur* | 16 | 1 | 380 | N 4<br>E 4<br>S 4<br>W 3 | 4<br>4<br>4<br>4 | SM | A: 65.3<br>R: 4.55 | Good | C: Good<br>S: Good<br>B: | | **B.1**<br>>40 yrs |
| T14 | | | | | | | | | | | |
| Holly<br>*Ilex aquifolium* | 0 | 1 | 110 | N 2<br>E 1<br>S 1<br>W 1.5 | 2<br>3<br>2.5<br>2 | SM | A: 5.5<br>R: 1.32 | Good | C: Good<br>S: Good<br>B: Good | | **C.1**<br>20 to 40 yrs |
| T15 | | | | | | | | | | | |
| Sawara Cypress<br>*Chamaecyparis pisifera* | 15 | 1 | 450 | N 2.5<br>E 1.5<br>S 2.5<br>W 3 | 1.5<br>7<br>2<br>0.5 | M | A: 91.6<br>R: 5.39 | Good | C: Good<br>S: Good<br>B: Good | | **B.1**<br>20 to 40 yrs |
| T16 | | | | | | | | | | | |
| Holly<br>*Ilex aquifolium* | 12 | 2 | 234 (Eq) | N 4<br>E 4<br>S 2.5<br>W 1.5 | 1<br>2<br>2.5<br>2 | M | A: 24.8<br>R: 2.8 | Good | C: Good<br>S: Good<br>B: Good | | **B.1**<br>20 to 40 yrs |

**Age Classifications:** N Newly planted; Y Young; SM Semi-mature; EM Early Mature; M Mature; OM Over Mature

**Condition:** C Crown; S Stem; B Basal area

**Stems:** Ø Diameter; (Eq) Equivalent stem diameter using BS5837:2012 definition

**ERC:** Estimated Remaining Contributio

| Tree and Tag No<br>Species | Hght (m) | Stems<br>No | Ø (mm) | Crown<br>Spread (m) | Clear (m) | Age | RP<br>A (m²)<br>R (m) | Phys Condition | Structural Condition | Preliminary Recommendations<br>Survey Comment | Cat<br>ERC |
|---|---|---|---|---|---|---|---|---|---|---|---|
| T17 | | | | | | | | | | Estimated Measurements | |
| Holly<br>*Ilex aquifolium* | 9 | 1 | 180 | N 3<br>E 2<br>S 3<br>W 3 | 2<br>2.5<br>3<br>3 | M | A: 14.7<br>R: 2.16 | Good | C: Good<br>S: Good<br>B: | | **B.1**<br>20 to 40 yrs |
| T18 | | | | | | | | | | | |
| Lawson Cypress<br>*Chamaecyparis lawsoniana* | 0 | 2 | 280 (Eq) | N 2.5<br>E 1.5<br>S 1<br>W 1.5 | 1.5<br>2<br>6<br>1.5 | SM | A: 35.5<br>R: 3.36 | Good | C: Good<br>S: Fair<br>B: Good | | **B.1**<br>20 to 40 yrs |
| T19 | | | | | | | | | | Estimated Measurements | |
| English Oak<br>*Quercus robur* | 19 | 1 | 850 | N 8<br>E 8<br>S 6<br>W 7 | 2.5<br>4<br>2.5<br>2 | M | A: 326.9<br>R: 10.2 | Good | C: Good<br>S: Good<br>B: Fair | *Fistulina hepatica* bracket emerging from between buttress roots on the west side. | **A.1.2**<br>>40 yrs |

**Age Classifications:** N Newly planted; Y Young; SM Semi-mature; EM Early Mature; M Mature; OM Over Mature

**Condition:** C Crown; S Stem; B Basal area

**Stems:** Ø Diameter; (Eq) Equivalent stem diameter using BS5837:2012 definition

**ERC:** Estimated Remaining Contributio

## Appendix 2 – tree survey definition of terms

| | | |
|---|---|---|
| Tree ID/tag - | Identification number and/or tree tag number. | |
| Species - | Common and/or scientific name. | |
| Height (m) - | To the nearest 0.5m below 10m; to the nearest 1m above 10m. | |
| Ø (mm)/No. of stems - | Stem diameter measured at 1.5m or equivalent with reference to Annex C of BS5837:2012. | |
| First branch - | Height above ground level and direction of first significant branch. | |
| Crown spread (m) - | Measured at the cardinal points. | |
| Canopy height/clearance - | Crown clearance in metres above ground level at the cardinal points. | |
| RPA - | Root protection area ($m^2$) and length of radial protection (m). | |
| Age class: | *Young* - | Less than approximately 10 years old. |
| | *Semi-Mature* - | Less than 1/5 of typical life expectancy. |
| | *Mature* - | Between 1/5 and 5/5 of typical life expectancy. |
| | *Over-Mature* - | Tree having reached its maximum life span and declining in health and size. |
| | *Veteran* - | A tree that is of interest biologically, aesthetically or culturally because of its age, size or condition. |
| Structural/physiological condition: | General condition of tree crown, stem and basal area structure and form - assessed as: | |
| | *Good* - | Good form, structure and vitality; no apparent signs of decay, structural weakness, decline in health, pests or diseases. |
| | *Fair* - | Moderate form and structure. |
| | *Poor* - | Poor form or structure; significant decay, structural weakness or decline in vitality. |
| BS 5837 category - | BS grading category detailed at Appendix 3. | |
| ERC - | Estimated remaining contribution. | |

# Appendix 3 – BS 5837 grading categories

## Trees Unsuitable for Retention

| | |
|---|---|
| ***Category U*** | Trees in such a condition that they cannot realistically be retained as living trees in the context of the current land use for longer than 10 years – shown in dark red on plans. |

## Trees To Be Considered for Retention

| | |
|---|---|
| ***Category A*** | Trees of high quality with an estimated remaining life expectancy of at least 40 years - shown in light green on plans. |
| | *1 - Mainly arboricultural qualities* – trees that are good examples of their species, especially if rare or unusual; or those that are essential components of groups, formal or semi-formal arboricultural features.<br><br>*2 - Mainly landscape qualities* – trees, groups or woodlands of particular visual importance as arboricultural and/or landscape features.<br><br>*3 - Mainly cultural values, including conservation* – trees, groups or woodlands of significant conservation, historical, commemorative or other value. |
| ***Category B*** | Trees of moderate quality with an estimated life expectancy of at least 20 years - shown in mid blue on plans. |
| | *1 - Mainly arboricultural qualities* – trees that might be included in category A but are downgraded because of impaired condition (e.g. presence of significant but remediable defects) to the extent that they are unlikely to be suitable for retention beyond 40 years; or trees lacking the particular quality necessary for category A designation.<br><br>*2 - Mainly landscape qualities* – trees present in numbers, usually growing as groups or woodlands, that attract a higher collective rating than they might as individuals; or groups of trees situated so as to make little visual contribution to the wider locality.<br>*3 - Mainly cultural values, including conservation* – trees with material conservation or other cultural values. |

## Appendix 3 – BS 5837 grading categories

| | |
|---|---|
| ***Category C*** | Trees of low quality with an estimated remaining life expectancy of at least 10 years, or young trees with a stem diameter under 150mm - shown in grey on plans. |
| | *1 - Mainly arboricultural qualities* – unremarkable trees of very limited merit or such impaired condition that they do not qualify in higher categories.<br><br>*2 - Mainly landscape qualities* – trees present in groups or woodlands but without this conferring on them significantly greater collective landscape value; and/or trees offering low or only temporary landscape benefits.<br><br>*3 - Mainly cultural values, including conservation* – trees with no material conservation or other cultural values. |

Beechdown
Tree Consultancy

Club Cottage, Top Road,
Slindon, Arundel BN18 0RP
01243 814740
[redacted]

Farthings
Appendix 4 - tree constraints plan

Beechdown ref: B/0706/26
BS 5837 tree survey & report - November 2026

1:250 @ A3 14/10/2026

N

Map data shown may contain Ordnance Survey ® products supplied by
Pear Technology Services Ltd; Email: info@peartechnology.co.uk
© Crown Copyright and database rights from date shown above
Ordnance Survey ® licence number AC0000822731

Brook Cottage

Farthings

Springfield

Owl Becks

T1
Yew
C

T2
Norway Maple
C

T3
Goat Willow
C

T4
Scots Pine
B

T5
Holly
T6
Norway Spruce
B

T7
Dogwood
C

T8
Apple
B

T9
Apple
C

T10
Ash
C

T11
Holly
B

T12
Lawson Cypress
B

T13
English Oak
B

T14
Holly
C

T15
Sawara cypress
B

T16
Holly
B

T17
Holly
B

T18
Lawson Cypress
B

T19
English Oak
A

Lawson cypress stump

0 10
Metres

## Legend

- Timber outbuilding
- Tree Stem
- Tree Canopy
  - *B*
  - *C*
- Clipped hedges
- Shadow
- Root Protection Area
- Farthings
- Application site
- Shrubs and borders
- Existing gravel driveway

Beechdown
Tree Consultancy

Club Cottage, Top Road,
Slindon, Arundel BN18 0RP
01243 814740
[redacted]

Farthings
Appendix 5 - development plan

Beechdown ref: B/0706/26
BS 5837 tree survey & report - November 2026

1:200 @ A3 14/10/2026

N

Map data shown may contain Ordnance Survey ® products supplied by
Pear Technology Services Ltd; Email: info@peartechnology.co.uk
© Crown Copyright and database rights from date shown above
Ordnance Survey ® licence number AC0000822731

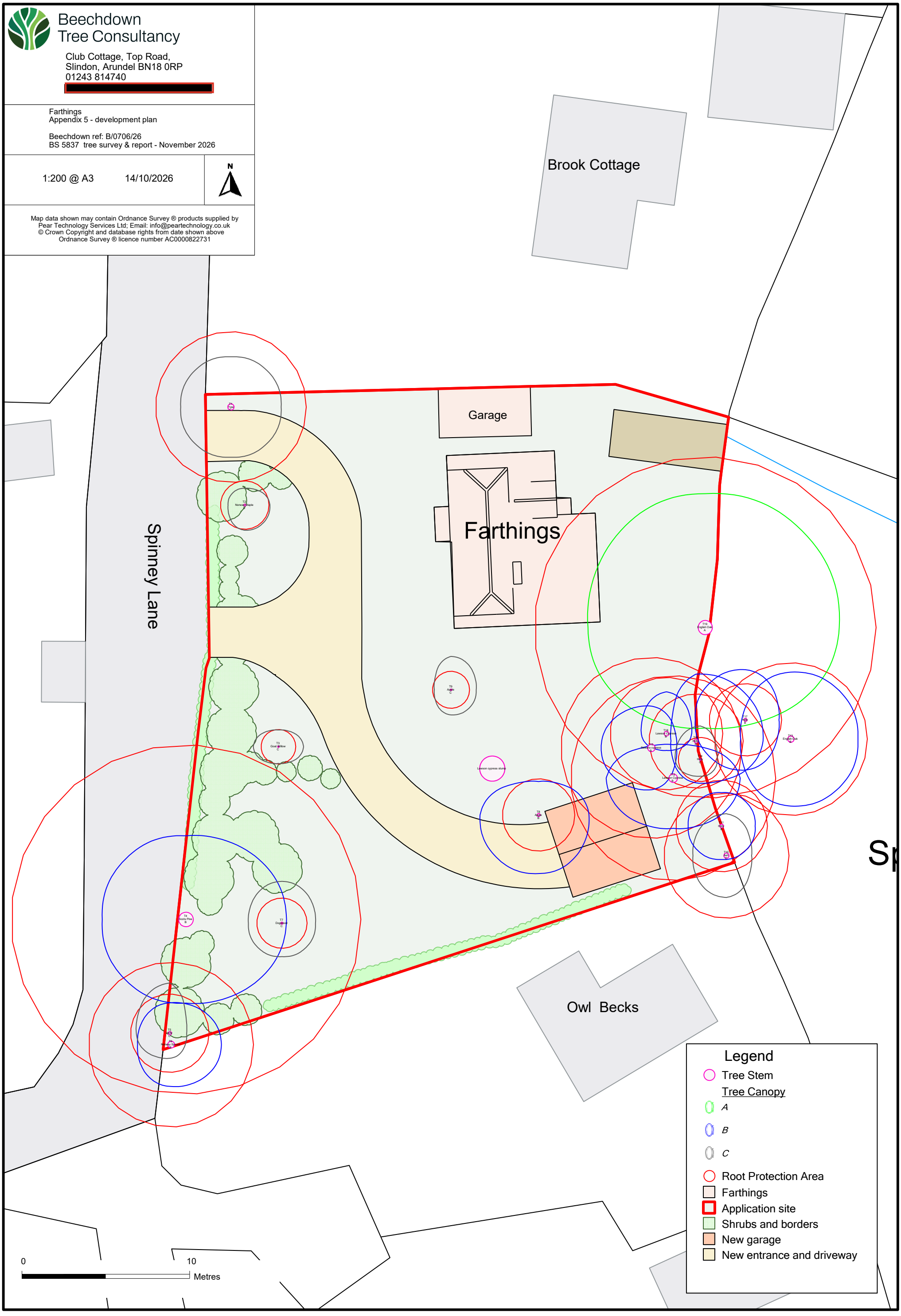

Beechdown
Tree Consultancy

Club Cottage, Top Road,
Slindon, Arundel BN18 0RP
01243 814740
[redacted]

Farthings
Appendix 6 - tree protection plan

Beechdown ref: B/0706/26
BS 5837 tree survey & report - November 2026

1:200 @ A3 14/10/2026

N

Map data shown may contain Ordnance Survey ® products supplied by
Pear Technology Services Ltd; Email: info@peartechnology.co.uk
© Crown Copyright and database rights from date shown above
Ordnance Survey ® licence number AC0000822731

Brook Cottage

Garage

Farthings

Spinney Lane

Existing gravel driveway provides an appropriate surface for the level of anticipated traffic.

New access point from Spinney Lane

Construction exclusion 1: 4 weld mesh panels positioned between the southern boundary and dense vegetation on the west side of the garden and preventing access to the base of trees T4-T7.

Construction exclusion 2: 5 weld mesh panels positioned between the southern boundary and the terrace at the side of the house and preventing access to the RPA of retained trees on the eastern boundary.

Owl Becks

0 10 Metres

## Legend

- Tree Stem
- Tree Canopy
  - A
  - B
  - C
- Application site
- Combined RPA
- Construction exclusion zone
- Farthings
- Shrubs and borders
- New garage
- New entrance and driveway
- Welfare storage and contractor parking
- Protective barrier
- Temporary ground protection

# Appendix 7 – Protective Barrier

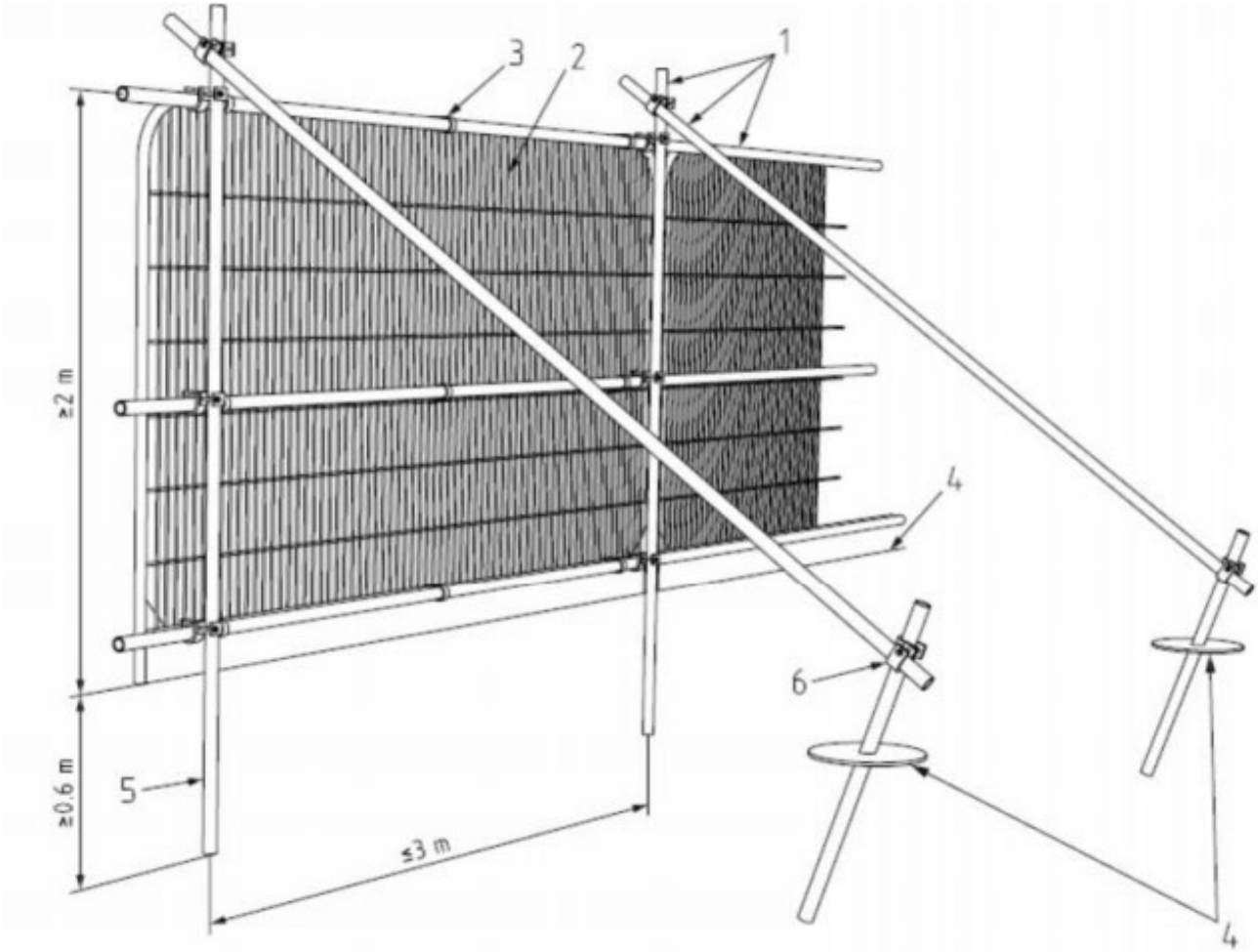


**Key**

1 Standard scaffold poles
2 Heavy gauge 2 m tall galvanized tube and welded mesh infill panels
3 Panels secured to uprights and cross-members with wire ties
4 Ground level
5 Uprights driven into the ground until secure (minimum depth 0.6 m)
6 Standard scaffold clamps

**Default specification for protective barrier as per Figure 2 of *BS 5837:2012 Trees in relation to demolition and construction – Recommendations, Fourth (Present) Edition.* BSI**

# Appendix 7 – Protective Barrier

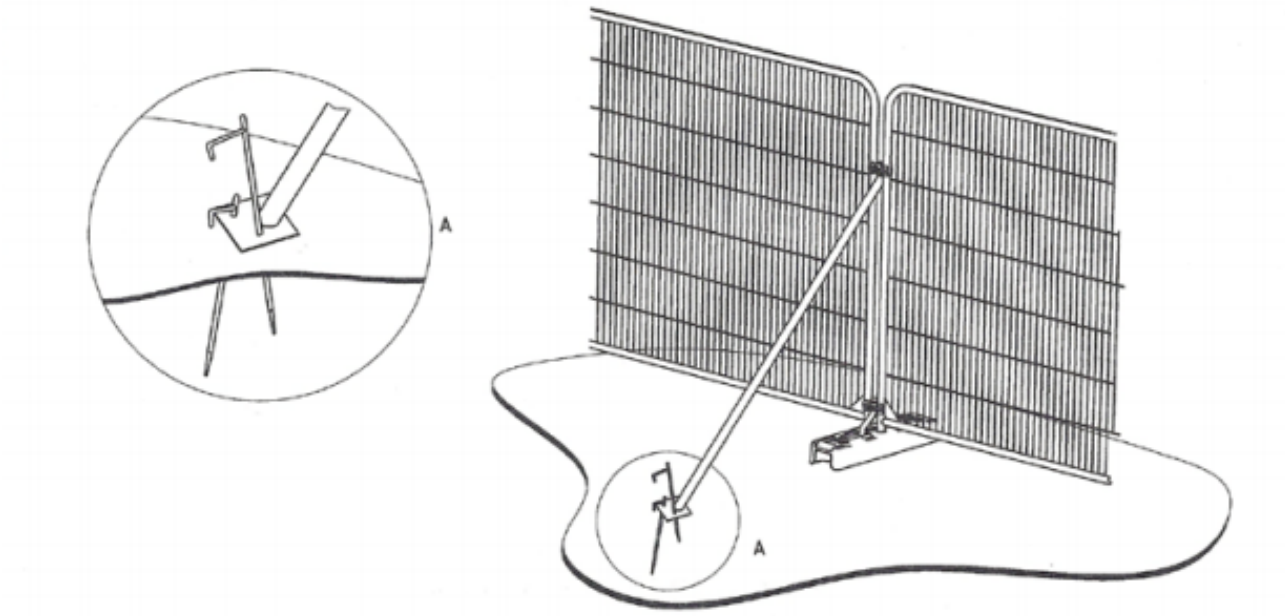


a) Stabilizer strut with base plate secured with ground pins

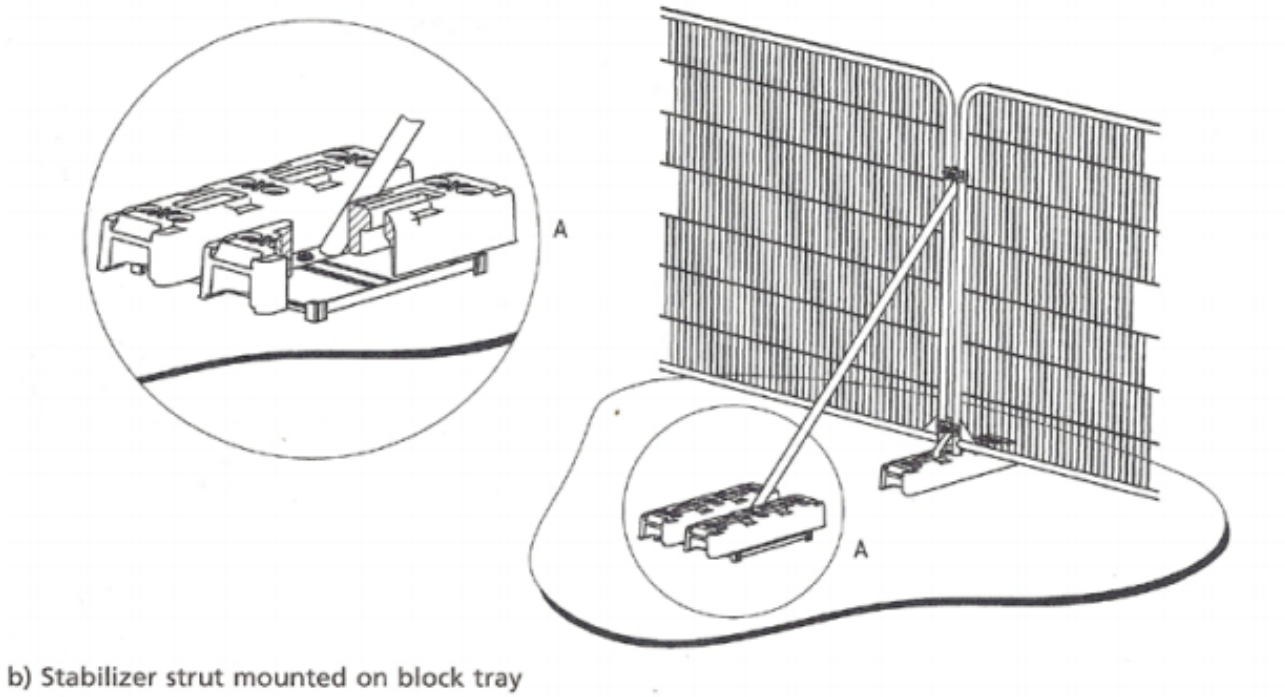


b) Stabilizer strut mounted on block tray

**Examples of above-ground stabilising systems as per Figure 3 of *BS 5837:2012 Trees in relation to demolition and construction – Recommendations, Fourth (Present) Edition.* BSI**

# Appendix 8 - Record of Site Visits and Arboricultural Supervision

| Client | Address |
|---|---|
| Mr & Mrs Hennighan | Farthings, Spinney Lane, West Chiltington, Pulborough RH20 2NX. |

| | |
|---|---|
| Local planning authority | Horsham District Council |
| Planning application | DC/26/0804 |
| Development | Elements relating to the new detached garage, the extended driveway, and the creation of an additional access point from Spinney Lane. |

| Stage of development | Action required |
|---|---|
| Pre-construction | Mark position of protective barrier forming construction exclusion zones. |

| | |
|---|---|
| Notes | |

| | |
|---|---|
| Arboriculturalist | |
| Signed | |
| Date | |

***NOTE - COPY OF COMPLETED FORM TO BE SCANNED AND SENT TO LPA ARBORICULTURAL OFFICER***

# Appendix 8 - Record of Site Visits and Arboricultural Supervision

| Client | Address |
|---|---|
| Mr & Mrs Hennighan | Farthings, Spinney Lane, West Chiltington, Pulborough RH20 2NX. |

| | |
|---|---|
| Local planning authority | Horsham District Council |
| Planning application | DC/26/0804 |
| Development | Elements relating to the new detached garage, the extended driveway, and the creation of an additional access point from Spinney Lane. |

| Stage of development | Action required |
|---|---|
| Pre-construction | Check position of protective barrier forming construction exclusion zone. |

| | |
|---|---|
| Notes | |

| | |
|---|---|
| Arboriculturalist | |
| Signed | |
| Date | |

***NOTE - COPY OF COMPLETED FORM TO BE SCANNED AND SENT TO LPA ARBORICULTURAL OFFICER***

# Appendix 8 - Record of Site Visits and Arboricultural Supervision

| Client | Address |
|---|---|
| Mr & Mrs Hennighan | Farthings, Spinney Lane, West Chiltington, Pulborough RH20 2NX. |

| | |
|---|---|
| Local planning authority | Horsham District Council |
| Planning application | DC/26/0804 |
| Development | Elements relating to the new detached garage, the extended driveway, and the creation of an additional access point from Spinney Lane. |

| Stage of development | Action required |
|---|---|
| Construction | Arboricultural supervision of initial excavation for foundations adjacent to the RPA. |

| | |
|---|---|
| Notes | |

| | |
|---|---|
| Arboriculturalist | |
| Signed | |
| Date | |

***NOTE - COPY OF COMPLETED FORM TO BE SCANNED AND SENT TO LPA ARBORICULTURAL OFFICER***

# Appendix 9 - Arboricultural Monitoring Form

| Client | Address |
|---|---|
| Mr & Mrs Hennighan | Farthings, Spinney Lane, West Chiltington, Pulborough RH20 2NX. |

| | |
|---|---|
| Local planning authority | Horsham District Council |
| Planning application | DC/26/0804 |
| Development | Elements relating to the new detached garage, the extended driveway, and the creation of an additional access point from Spinney Lane. |

| **Area inspected** | **Comments** | **Action required** |
|---|---|---|
| Protective barriers | | |
| Construction exclusion zone | | |
| Site storage/material mixing | | |
| Other | | |
| Additional Comments | | |

| | |
|---|---|
| Arboriculturalist | |
| Signed | |
| Date | |

***NOTE - COPY OF COMPLETED FORM TO BE SCANNED AND SENT TO LPA ARBORICULTURAL OFFICER***