NOTES
- DO NOT SCALE OFF THIS DRAWING EXCEPT FOR PLANNING PURPOSES
- CHECK ALL DIMENSIONS ON SITE BEFORE ANY WORK IS COMMENCED
- ALL GOODS MATERIALS AND WORKMANSHIP MUST CONFORM WITH CURRENT BUILDING REGULATIONS, BRITISH STANDARDS AND CODES OF PRACTICE
- COPYRIGHT OF THIS DRAWING IS RETAINED BY THE ARCHITECT AND IT MUST NOT BE REPRODUCED WITHOUT WRITTEN CONSENT

NOTES:
ORIGIN DOORS AND WINDOWS Ltd:

Aluminium frame colours:
Internal Jet Black (ref: 9005M)
External Jet Black (ref: 9005M)

Handles:
Knurled Handle - brushed black

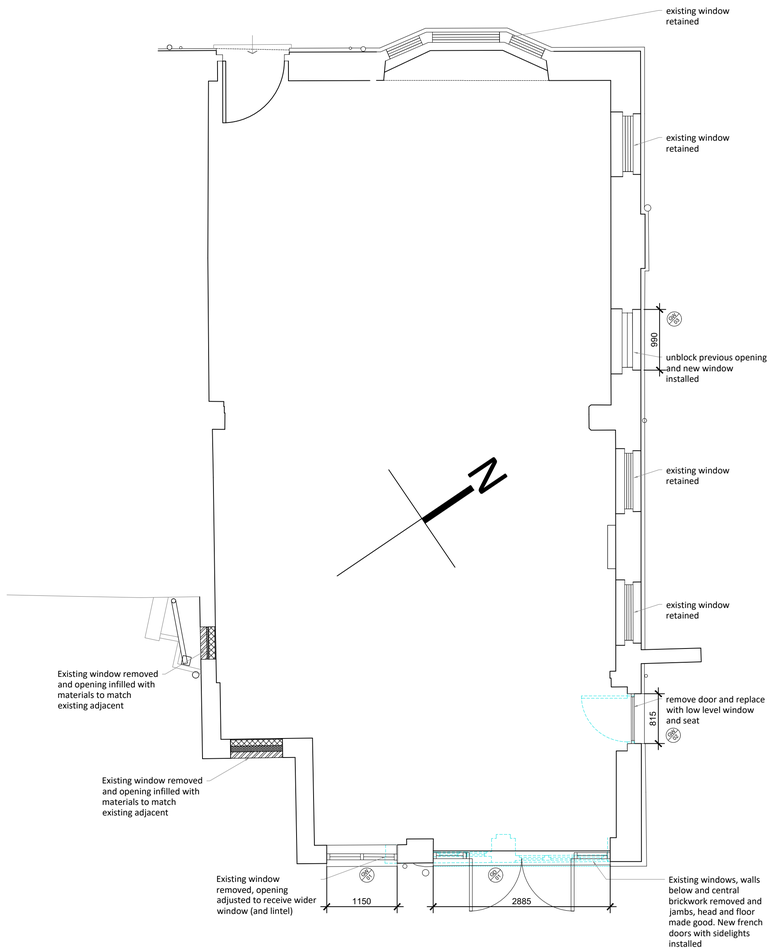

GROUND FLOOR PLAN

0m 1m 2m 3m 4m 5m

scale 1:50

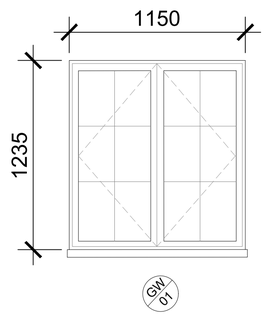

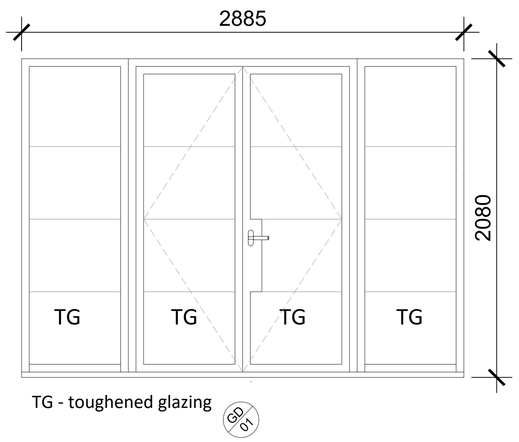

TG - toughened glazing

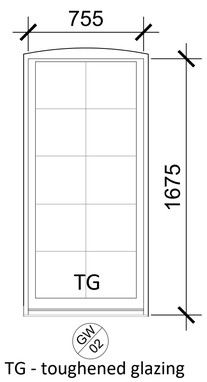

TG - toughened glazing

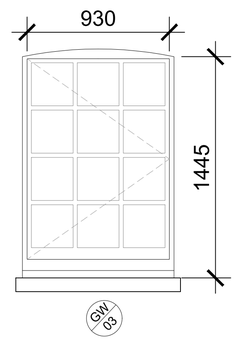

WINDOW ELEVATIONS - viewed externally

0m 0.5m 1.0m 2.0m

scale 1:20

REV	DATE	BY	AMENDMENT

folkes architects
The Old Forge
6 Church Street
Storrington
West Sussex
RH20 4LA
t. 01903 868629
info@folkesarchitects.co.uk

CLIENT
Claire Barnard and Nick Wells

JOB TITLE
140 High Street
Steyning
West Sussex
BN44 3LH

DRAWING TITLE
Proposed Window and Door Schedule

PROJECT STAGE
PLANNING

DRAWING STATUS
PLANNING ISSUE
NOT FOR CONSTRUCTION USE UNLESS STATED AS 'CONSTRUCTION'

DATE	SCALE	DRAWN BY	CHECKED BY
Sept 2025	shown@A1	GW	

JOB NO.	DRAWING NO.	REVISION
24103	3.05	-