LIMEKILN FARM, BROADWATER LANE, COPSALE RH13 6QW

HORSHAM DISTRICT COUNCIL PLANNING REF. DC/23/1325

AUGUST 2024

PRE-COMMENCEMENT CONDITION 13

REVISED NOVEMBER 2024

Arena surface specification changed to sand, no synthetic material additions

Sand School surface

No part of the sand school development hereby permitted shall be occupied until details of the finished surface of the sand school have been submitted to and approved by the Local Planning Authority in writing. The development shall be carried out in accordance with the approved details and thereafter maintained as such.

1.0. SAND SCHOOL FLOOR CONSTRUCTION

1.1. **As shown on the sectional drawing, the base will be constructed using a 150mm stone base covered with a Geo-tex membrane, over which will be 100mm of silica sand, with the addition of natural sheep and alpaca wool.**

1.2. **The proposed surface will be;**

- **Shock absorbent**
- **Help to retain the moisture longer in the sand when rained on or watered**

- **Lower dust content**
- **Provide minimal kickback**
- **Give high energy return**
- **Long lasting**
- **Low maintenance**
- **Environmentally 100% friendly**

2.0. TYPICAL SECTION THROUGH SAND SCHOOL FLOOR

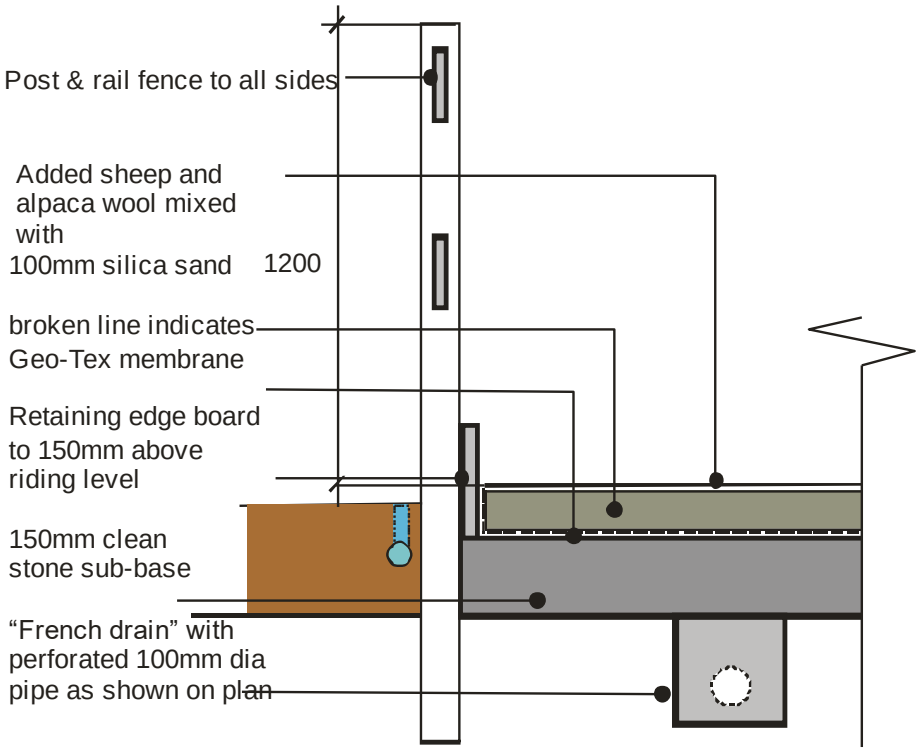

Do Not Scale

PRE-COMMENCEMENT CONDITION 13

Sand School surface

1st August 2024

Revised 2nd November 2024/End