n.j.a town planning Ltd

Applications & Appeals Services
The Beehive, City Place, Gatwick, RH6 0PA
Tel: 01403 252231 email: njaltd@gmail.com

FAO Neil Devereux
The Planning Inspectorate
Zone 3C Eagle
Temple Quay House
2 The Square
Bristol
BS1 6PN

NJA Ref: 23/250

2 July 2025

FINAL COMMENTS

Dear Mr Devereux,

PINS Ref: **APP/Z3825/W/25/3364869**
Appellant: **VBMC Building Developmemt Ltd**
Site: **1 Littleworth Lane, Partridge Green, West Sussex, RH13 8JF**

Thank you for your letter dated 24 June 2025. On behalf of the Appellant, please find enclosed final comments in respect of the Council's Statement of Case and third party comments.

If you have any queries or require any further information, please do not hesitate to contact me.

Yours sincerely

[redacted]

Nikolas J. Antoniou
BSc HONS DIPTP MRTPI
Chartered Town Planner
For and on behalf of NJA Town Planning Ltd

RTPI Chartered Town Planner

Appeal Ref: **APP/Z3825/W/25/3364869**

Appellant: VBMC Building Developmemt Ltd
Site: 1 Littleworth Lane, Partridge Green, West Sussex, RH13 8JF

APPELLANTS FINAL COMMENTS

Comments on the Local Authority's Statement

Reason 1

The Council fails to recognise their significant lack of a 5 year supply of housing land. This has been made worse following the introduction of the revised NPPF (which they also fail to mention) and the revised housing targets associated with that document. The most recent AMR sights just 1.0 year's supply.

The FAD is also superseded by the introduction of the revised NPPF and housing targets.

No mention is made of the advice in paragraph 11d of the NPPF.

The appellant made reference to the fact that the site lies within the boundary of the proposed Secondary Settlement of Littleworth in the emerging Local Plan. This is considered relevant as by proposing this designation, the Council have obviously considered matters such as the impact on neighbouring countryside and whether the location is sustainable, and found that to be acceptable in principle. It is acknowledged that the emerging Local Plan has been delayed, but the basic processes in proposing this designation have been undertaken.

The proposal does not encroach into the Local Gap.

Reason 2

The Appellant has assessed the Council's views on this aspect within the previous Statement.

Reason 3

As can be seen from the attached copy of the covering letter sent with the initial appeal documetntation, the Appellant sent copies of the revised Water Neutrality documentation to both the Council and the Planning Inspectorate (Water Neutrality Report C3111 - Rev P4 – 28 April 2025) is clearly listed. A further copy is being provide to both parties with these final comments.

It is the Appellant's view that the revised documentation shows the proposal to be water neutral with credits being purchased, a tried and tested solution to remove uncertaintity.

Whilst it is noted that the presumption in favour of sustainable development does not apply where the plan or project is likely to have a significant effect on a habitat sites, given the proposal can be made water neutral, this is not the case in this instance.

Other Matters

I can confirm that the BNG metric has been checked by the Appellant's ecologist and the figures are correct. Again, for the avoidance of doubt another copy is provided with the Appellant's final comments for ease of reference.

Conclusion

The Appellant stands by the planning balance and conclusions set out in their Statement of Case previously submitted. The appeal scheme represents the provision of five much needed homes in a District with significant housing supply issues.

Conditions

No objections are raised to the Council's suggested conditions.

Third Party Comments

The Appellant wishes to clarify that the documentation they submitted to the Inspectorate clearly stated that "The Inspector will need to enter the site to appreciate the proposal in context". The Council in their Questionnaire response were of the view that "the relevant part of the appeal site [can] be seen from a road, public footpath, bridleway or other public land".

The Council raised no objection to the proposal in terms of its impact on the amenities of adjoining occupiers.

With respect to Apple Tree Cottage there will be over 24m between the new dwelling on Plot 3 and the existing property. The bay window referred to will be at ground level, where boundary planting will screen any views. The only flank window proposed is a very small window to the en suite bathroom, which will be glazed with obscure glass. There will be no loss of light to the habitable rooms of the property.

No new issues were raised in third party comments.

For the reasons outlined above and in the Appellants' statement of case it is respectfully requested that the appeal be allowed.

n.j.a town planning Ltd

Applications & Appeals Services
The Beehive, City Place, Gatwick, RH6 0PA
Tel: 01403 252231 email: njaltd@gmail.com
www.njatownplanningltd.co.uk

Planning Inspectorate
Temple Quay House
2 The Square
Temple Quay
Bristol
BS1 6PN

Ref: NJA/23/250

30 April 2025

PLANNING APPEAL SUBMISSION

Dear Sir / Madam

Appellant: **Ms S Awcock – VBMC Building Development Ltd**
LPA Ref: **DC/24/1084**
Proposal: **Demolition of existing detached chalet style bungalow and outbuildings and erection of 1no. pair of three bedroom semi-detached dwellings fronting littleworth lane and 1no. three bedroom and 2no. four bedroom detached dwellings to the rear with associated landscaping and off-street parking utilising existing access**
Site: **1 Littleworth Lane, Partridge Green, West Sussex, RH13 8JF**

This appeal has been submitted electronically. Below is a list of appeal documents submitted through the portal.

Planning Application documents 15/07/2024

- Planning Appeal form and Certificate B
- Planning application form with Certificate B
- Planning Application Covering Letter
- CIL Form 1
- Supporting Planning Design and Access Statement
- DAS Appendices NJA/1 – 5

- 10229C Transport Report – June 2024
- Access Visibility Plan 10229-102-P2
- Arboricultural Report (AIA) 220757-PD-11a
- Landscape Scheme
- Landscape Plan
- Preliminary Ecological Appraisal
- Bat Survey
- Great Crested Newt & eDNA
- BNG Conditions Assessment Metric Tool – XLSX FILE TO BE EMAILED
- Hydrogeological & Water Neutrality Assessment V3.1
- Water Neutrality Report P2
- Sustainability Statement
- C3111 PL2_ Foul and Surface Water Drainage Report
- C3111 Attenuation Tank Calculations_3.5l_s
- C3111_101_Existing Runoff
- C3111_PL2_102_Proposed Drainage Strategy_Sheet 1 of 2
- C3111_PL2_103_Proposed Drainage Strategy_Sheet 2 of 2
- C3111_PL2_201_Contributing Area Plan
- C3111_PL2_301_Exceedance Flow Routes
- Greenfield runoff rate estimation
- Permeable Paving_Sub-base Dams_Infiltration

- Drawings:
  - Littleworth lane-Location Plan VBMC001 – 01
  - Littleworth lane-Proposed Site Plan VBMC001 - 02
  - VBMC001-03 Rev P3 – Proposed Streetscene
  - VBMC001-P1-1 Rev P3 – Proposed plots 1-2 floor plans – ground and first floor
  - VBMC001-P1-2 Rev P3 – Proposed plots 1-2 Loft floor plan and roof plans
  - VBMC001-P1-3 Rev P3 – Proposed plots 1-2 – section
  - VBMC001-P1-4 Rev P3 – Proposed plots 1-2 – elevations
  - VBMC001-P3-1 Rev P3 – Proposed plot 3 – floor plans – ground and first floor
  - VBMC001-P3-2 Rev P3 – Proposed plot 3 – roof plan and section
  - VBMC001-P3-3 Rev P3 – Proposed plot 3 - elevations
  - VBMC001-P3-4 Rev P3 – Proposed plot 3 - carport
  - VBMC001-P4-1 Rev P3 – Proposed plot 4 – floor plans – ground and loft plans

- VBMC001-P4-2 Rev P3 – Proposed plot 4 – roof plan and section
- VBMC001-P4-3 Rev P3 – Proposed plot 4 - elevations
- VBMC001-P5-1 Rev P3 – Proposed plot 5 – floor plans – ground and first
- VBMC001-P5-2 Rev P3 – Proposed plot 5 – roof plan and section
- VBMC001-P5-3 Rev P3 – Proposed plot 5 - elevations
- VBMC001-P5-4 Rev P3 – Proposed plot 5 – carport

Validation Additional Information – 29.07.24

- 28.05.24_Attenuation Tank Calculations_3.5l_s - submitted 29.07.24
- 10229_102_P3_Access Plan Visibility - submitted 29.07.24
- 10229A - Littleworth Lane West Sussex - Transport Report - submitted 29.07.24
- C3111 PL3_ Drainage Report - submitted 29.07.24
- C3111_PL1_101_Existing Runoff_CHK1 - submitted 29.07.24
- C3111_PL3_102_Proposed Drainage Strategy_Sheet 1 of 2 - submitted 29.07.24
- C3111_PL3_102_Proposed Drainage Strategy_Sheet 2 of 2 - submitted 29.07.24
- C3111_PL3_201_Contributing Area Plan_CHK1 - submitted 29.07.24
- C3111_PL3_301_Exceedance Flow Routes_CHK1 - submitted 29.07.24
- Greenfield runoff rate estimation - members UK SuDS - submitted 29.07.24
- Littleworth lane-Location Plan VBMC001 - 01 - submitted 29.07.24
- Littleworth lane-Proposed Site Plan VBMC001 - 02 - submitted 29.07.24
- Permeable Paving (Subbase Dams) Infiltration - submitted 29.07.24

Validation Additional Information – 08.08.24 & 09.09.24

- Access Plan Visibility 10229-102-PL3 – submitted 08.08.24
- B-BVD-001-003-001 BNG Plan – submitted 09.09.24
- Habitat Management & Monitoring Plan (HMMPT) Draft – B-VBD-001-003-001 submitted 09.09.24
- Proposed Drainage Strategy Sheet 1 of 2 C3111-PL-102-PL3 submitted 08.08.24
- Proposed Drainage Strategy Sheet 2 of 2 C3111-PL-103-PL3 submitted 08.08.24

Validation Additional Information – 18.09.24

- B-VBD-001-003-001 – Statutory Biodiversity Metric Calculation Tool submitted 18.09.24 - XLSX FILE TO BE EMAILED

Additional Information – 09.10.24

- Fire Tender Vehicle Tracking 10229-2200-P1 submitted 09.10.24

Additional Information – 17.10.24

- Refuse Vehicle Tracking 10229-2201-P1 submitted 17.10.24
- Access Plan Visibility 10229-102-P4 submitted 17.10.24

Planning Appeal documents

- Decision Notice
- Appeal Statement of Case
- Appeal Appendices NJA/1 – NJA/10
- Wastewater Plan 1442283-1 – 11 April 2024
- Foul & Surface Water Drainage Report C3111 Rev PL4 – 24 April 2024
- Water Neutrality Report C3111 - Rev P4 – 28 April 2025
- Proposed Water Offsetting Scheme South Lodge 1 V3.1 – 28 April 2025
- C3111 Water Credits Letter dated 4 March 2025
- Existing Runoff C3111 PL1 101 – April 2024
- Exceedance Flow Routes C111 PL3 301 – April 2024
- Proposed Drainage Strategy Sheet 1 of 2 C3111 PL4 102 – April 2024
- Proposed Drainage Strategy Sheet 2 of 2 C3111 PL4 103 – April 2024
- Contributing Area Plan C3111 PL4 201 – April 2024
- CGS Reply to LLFA Comments 21.03.2025
- Greenfield Runoff Rate Estimation – Members YK SuDS dated 16 April 2024.
- Greenfield Runoff Calculations Only (Proposed Impermeable Areas) dated 23 October 2024
- Groundwater Level Monitoring Report
- Permeable Paving (Subbase Dams) Infiltration dated 21 March 2025
- Surface Water Calculations dated 12 March 2025
- B-VBD-001-BNG Unit Reservation Certificate
- B-VBD-001-BNG Metric - XLSX FILE TO BE EMAILED

- B-VBD-001-BNG Baseline Habitat Plan
- B-VBD-001-BNG Condition Assessment - XLSX FILE TO BE EMAILED
- B-VBD-001-BNG Gain Plan
- B-VBD-001-BNG HMMP
- B-VBD-001-BNG Proposed Habitat Plan
- B-VBD-001-BNG Statement

I trust the enclosed documents are in order. I look forward to receiving confirmation that the Appeal has been validated. In the meantime however, please do not hesitate to contact me should you require any further information.

Yours faithfully



Nikolas J. Antoniou
BSc HONS DIPTP MRTPI
Chartered Town Planner
For and on behalf of NJA Town Planning Limited

Consulting Civil Engineers

Water Neutrality Report

1 Littleworth Lane, Patridge Green, West Sussex RH13 8JF

For

VBMC Building Development Ltd

Rev – **P4**

Reference **C3111**

Date **28th April 2025**

Revision	Date of Issue	Comments	Prepared By	Checked By
P	17.05.2024	Initial Issue	LH	CS
P1	29.05.2024	Revised	LH	CS
P2	13.06.2024	Revised	LH	CS
P3	04.03.2025	Revised	LH	CS
P4	28.04.2025	Revised	LH	CS

Richard Cobden House, Lion Street, Chichester, West Sussex, PO19 1LW
Tel: 01243 933253 E: mail@cgscivils.co.uk **W:** www.cgscivils.co.uk

1 Introduction

1.1.1 CGS Civils Ltd has been appointed by VBMC Building Development Ltd to undertake a Water Neutrality Report for a proposed development at 1 Littleworth Lane, Patridge Green West Sussex. The proposed scheme will consist of the demolition of an existing dwelling and the construction of 5 No. new dwellings.

1.1.2 The site falls within the Sussex North Water Supply Zone, in which Natural England have written to all authorities within the zone providing a position statement for applications which may place increased pressure on this zone. This explains that recent case law has established that abstraction from the Supply Zone may be having an impact on protected sites (Arun Valley Special Area of Conservations (SAC), Special Protection Area (SPA) and Ramsar site).

1.1.3 As a result, developments within this zone must not add to this impact, as such, the purpose of this report is to therefore provide an overview on the potential water usage changes on the site because of the proposed development, and to confirm that the site is water neutral.

Fig 1. Sussex North Water Supply Zone Area

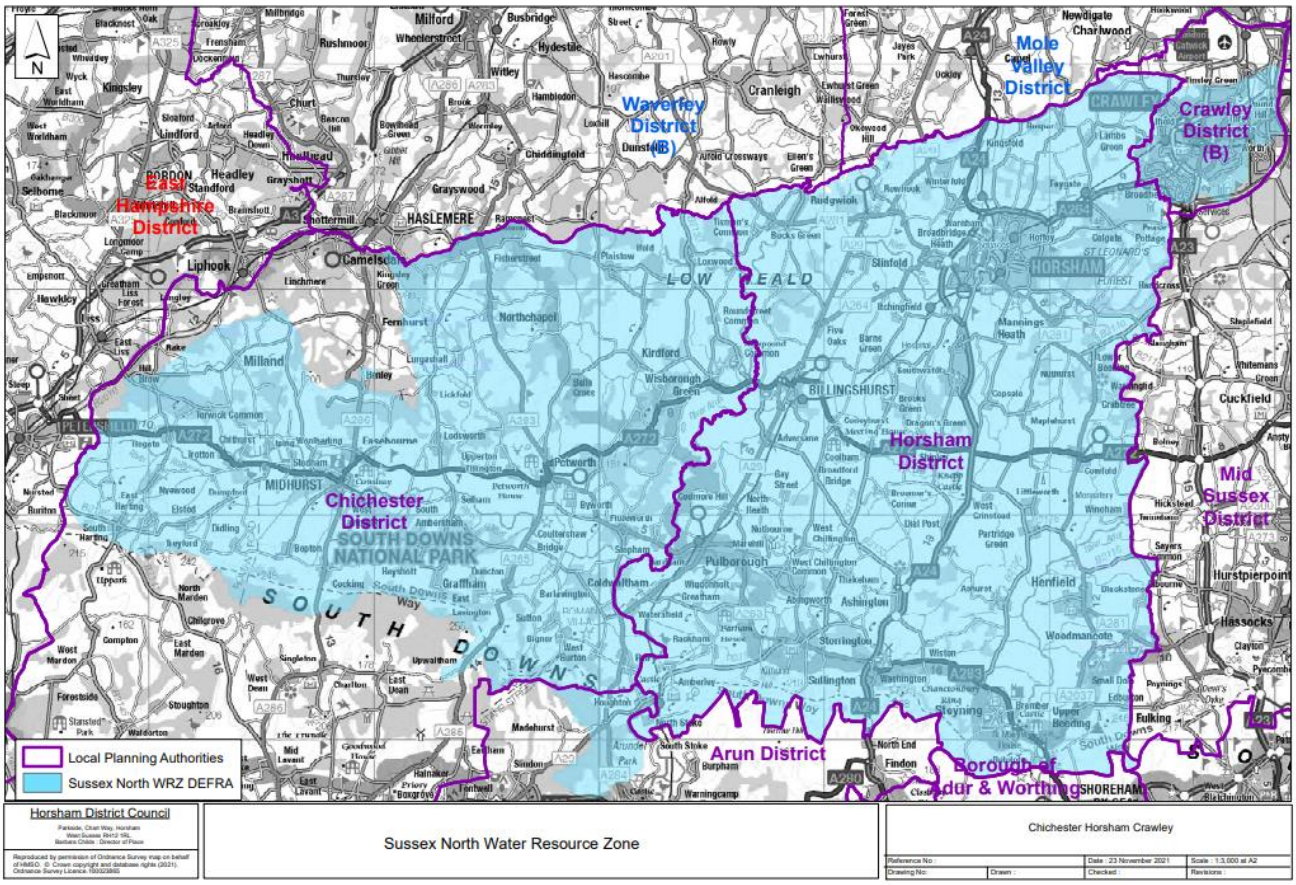

1.1.4 The proposed development is located at OS Grid Reference TQ 19194 19970 and has the post code RH13 8JF.

Fig 2. Site Location



1.1.5 Waterwise defined Water Neutrality as:

'For every new development, total water use in the region after the development must be equal to or less than the total water uses in the region before the new development.'

1.1.6 Achieving water neutrality involves using a three-step approach. First, the demand for water from the new development must be reduced as far as is practicable, followed by the re-use of water; then the remaining demand should be offset within the region. Following this three-step approach allows the volume that requires offsetting to be reduced which ultimately reduces the cost of the overall scheme. This is noted within the Waterwise neutrality definition, which defines the three steps which should be undertaken in order to achieve water neutrality in their recent review dated January 2021.

- Reduce water demand in the new development through improvement in efficiency.
- Re-use water, wherever possible.
- Offset the remaining water demand from the new development if required.

1.1.7 The report will be split into the following sections:

- A Review of Water Neutrality demand reduction
- A calculation of estimate water usage from proposed development
- Identification of measures that can be first used to reduce this demand
- Identification of measures that can be used to re-use water
- Establish solutions to offset that demand in order to achieve neutrality.

1.1.8 This report will follow the methods documented within *'A Review of Water Neutrality in the UK'* carried out by Waterwise in January 2021. The document provides details on how developments can achieve water neutrality by utilising the 3-stage approach.

Fig 3. 3-stage approach

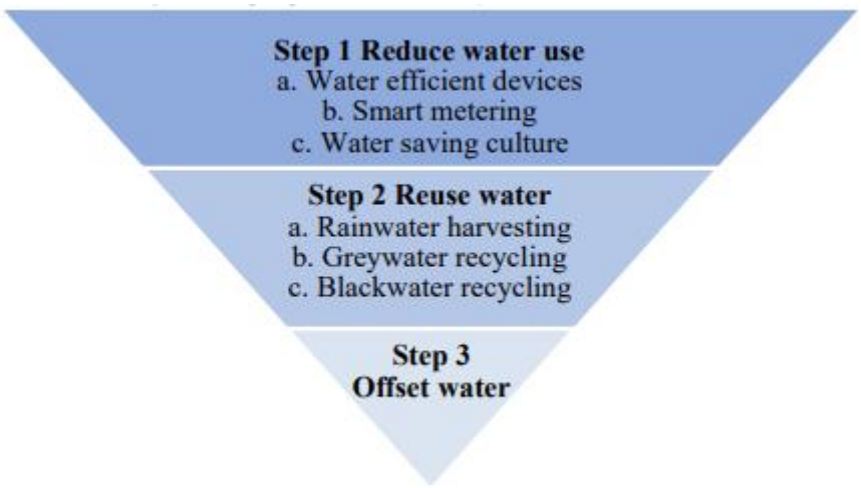

1.1.9 Some increase in water demand within the region from planned development during the local plan period is inevitable. However, it can be minimised by making the site as water efficient as possible.

1.1.10 Per Capita Consumption (PCC) is used as a measure of water use and is the volume of water that is used by one person in one day. It is usually measured in litres per person per day (l/p/d). The average PCC within Southern Water's 'Sussex North Water Resource Zones (WRZ)' is 135 l/p/d. Homes without a water meter consume on average 160 l/p/d and for homes with a water meter, consume on average 131 l/p/d.

1.1.11 Part G of the Building regulations currently states that new build housing should achieve a minimum of 125 l/p/d. A tighter target of 110 l/p/d can be requested if the local authority can establish a clear need based on available evidence.

1.1.12 The table below indicates different demand scenarios including Southern Water's Target 100 Ambition to achieve 100 l/p/d, as well as further scenarios where water demand is cut more dramatically.

Table 1 PCC Demand Scenarios

Demand Scenario	Per Capita Consumption (l/p/d)
British Flows and Loads	150
Building Regulations Standard	125
Building Regulations Optional	110
Target 100	100
Realistic Achievable	85
Ambitious	62

1.1.13 The benefits of water neutrality are wide ranging, from financial and reputational to environment and social. For a new domestic building, they could include:

- **Saving Water** – Over 100,000 litres of water can be saved per year for each water neutral home built
- **Saving Carbon** – A significant CO2 saving can be achieved by reducing the demand for hot water for baths, showers, basins, dishwashers and washing machines
- **Saving Money** – Both water and energy bills will reduce
- **Reducing environmental impact** – Decreasing water abstracted from rivers and groundwater sources
- **Improved Resilience** – For the future by minimising the additional pressure on water resources
- **Enabling future housing growth** – In water scarce areas by reducing the impact of new homes and buildings
- **Reducing discharge to sewage** – by using less water, collecting rainwater and recycling greywater, less water is discharged to the drainage network
- **Short pay-back time** – After approximately 5 years the saving of water neutrality will outweigh the costs of doing so.

2 Executive Summary

2.1.1 The existing site consists of a single dwelling which has a water usage of 235.7 l/day. The Proposed scheme will consist of the demolition of an existing dwelling followed by the construction of 5 No. dwellings.

2.1.2 As demonstrated within this report, the use of water efficient fittings and rainwater harvesting will reduce the demand as much as possible. The remaining demand will be offset via the purchase of water credits.

Table 2 Water Usage Comparison

Existing Water usage	**235.7 l/day**
Proposed Scheme water usage prior to mitigation measures	1487.2 l/day
Proposed Scheme water usage post mitigation measures and removal of existing dwelling	600.8 l/day
Water credits to be purchased (including 5% contingency)	631
Proposed Scheme water usage equal to or lower than existing site	Yes

3 Calculation of estimated water usage from the proposed development

3.1.1 Before any necessary steps to achieve water neutrality can be determined, the total water demand for the proposed development must first be calculated. The proposed scheme will consist of the demolition of an existing dwelling and the construction of 5 No. new dwellings. It is proposed that there will be 2 No. 3-bedroom and 3 No. 4-bedroom dwellings. In accordance with the average occupancy levels set out by Horsham DC, the population for the 3-bedroom dwellings will be 2.47 and the occupancy for the 4-bedroom dwellings will be 2.88. The total occupancy for the site will be 13.52.

Table 3 Average occupancy levels

Number of bedrooms	Average occupancy level
1	1.32
2	1.88
3	2.47
4	2.86
5	3.09

3.1.2 As the proposed property will be a new dwelling, Policy 37 of the Horsham District Planning Framework (HDPF) triggers the requirement for the optional building regulations standard of 110 litres per person per day (l/p/d), therefore:

13.52 x 110 l/p/d
= 1487.2 l/day

3.1.3 The following sections within this report will cover measures that can be undertaken in order to reduce the water consumption of the proposed property and aim for the 'Ambitious' PCC of 62/l/p/d.

4 Step 1 – Identifying measures that can be used to reduce this demand

4.1.1 The first and most important step in achieving water neutrality will be to ensure that the water used by the proposed development is used as efficiently as possible; the smaller the water demand of the building due to the design and fittings, the less water is needed to be reused and offset. There are a number of ways of achieving a smaller water demand:

- Fitting homes with efficient products, such as:
  - Aerated Taps
  - Aerated Shower heads
  - Low Flush Toilets, or air flush toilets
  - Water efficient white goods
- Installing Smart Meters, this allows the consumer to see how much water they are using, and how this affects their water saving bill. This can help consumers to reduce water usage, identify leaks, and meet water saving targets, with the bonus of reduced bills.
- Designing home to encourage water saving behaviours, this can also help reduce water use and help ensure that other measures that are put in place are effective. Education and awareness are important components of achieving water neutrality.

4.1.2 Building Regulations Part G states that when the new fittings approach is used, the water consumption of the fittings must not exceed a total of 125 l/p/day/. The values are listed in the table 4 below:

Table 4 Maximum Fittings Consumption from Building Regulations Part G

Water Fitting	Maximum Rating
WC	6.4/ litres dual flush or 4.5 litres single flush
Shower	10 l/min
Bath	185 litres
Basin Taps	6 l/min
Sink Taps	8 l/min
Dishwasher	1.25 l/place setting
Washing Machine	8.17 l/kilogram

4.1.3 Should the proposed development be required to comply with the optional water efficiency as part of the conditions for planning permission, the estimated consumption of water can be calculated via the Optional requirement level of fittings consumption. This is listed within Building Regulations Part G, which also states that the water consumption must not exceed 110 l/p/day, and the maximum fittings consumption for optional requirement can be found in Table 5 below:

Table 5 Maximum fittings consumption optional requirement level from Building Regulations Part G

Water Fitting	National Base Level
WC	4/2.6 litres dual flush
Shower	8 l/min
Bath	170 litres
Basin Taps	5 l/min
Sink Taps	6 l/min
Dishwasher	1.25 l/place setting
Washing Machine	8.17 l/kilogram

4.1.4 However, to improve on the above requirements, the proposed site can implement the following measures in order to focus on becoming a water efficient development. By installing the following features, the development can achieve a water demand of around 85 l/p/d, which aligns with a 'Realistic Achievable' PCC. See Table 6 below:

Table 6 Water efficient fittings consumption

Water Fitting	Consumption Level
WC	4/2.6 litres dual flush
Shower	7 l/min
Bath	145 litres
Basin Taps	2.5 l/min
Sink Taps	5 l/min
Dishwasher	0.67 l/place setting
Washing Machine	5.5 l/kilogram

Please note that by accepting this report, you accept the low flow rates of the proposed fittings required to achieve water neutrality. CGS Civils cannot be held responsible for any reduced comfort levels that may arise from the use of these fittings.

4.1.5 Water demand can also be reduced through fitting metres, which help to identify leaks and track water consumption as a way to support and encourage behavioural changes such as, not leaving the tap running when brushing teeth and using eco settings on the washing machine and dishwasher. It should be noted that behavioural changes have not been used within the calculations within this report as it is impossible to enforce.

Table 7 Practical Summary of Step 1

Step 1: Reduce Water				
Toilets	Cistern displacement devices (toilet hippos)	Retrofit flush devices to dual flush	Fix leaky toilets	
Taps	Tap inserts (aerators)	Low flow restrictors	Push taps	Infrared Taps
Showers/baths	Low flow shower heads (less than 8litres/min)	Shower timers	Reduced bath frequency & volume	
Outdoors	Hosepipe flow restrictors	Hosepipe siphons	Water butts	Mulches and composting to keep soil moist
Smart Metering	Leakage information	Encourage behavioural changes	Innovative tariffs	Savings estimates

4.1.6 By installing the water efficient devices listed above, it is possible to reduce the water demand on site from **1487.2 l/day** down to **1203.8 l/day**

13.52 x 89.04 l/p/d

= **1203.8 l/day**

- *13.52 (Total site occupancy) x 89.04 (Appendix A – Water Calculator for Proposed fittings)*

5 Step 2 – Identifying measures that can be used to re-use water

5.1.1 Once the water demand has been reduced via the installation of water efficient products, water reuse should be considered. The term 'water reused' refers to the capture, treatment (if it is required) and the use of alternative water supplies for non-potable purposes. It includes:

- Rainwater and surface water harvesting
- Greywater recycling (typically the used water from baths, showers and hand basins)
- Wastewater recycling.

5.1.2 The installation of water reusing technology has the potential to save significant amounts of water; for example, 24% of water in the home is used for flushing the toilet and only 4% externally in the garden meaning a water reuse system could save at least a quarter of the demand if it was installed for these purposes. Depending on the quality and the system installed, it could also be possible to re-use water for a washing machine which accounts for 12% of total water usage.

Table 8 Practical Summary of Step 2

Step 2: Reuse Water			
Rainwater Harvesting	Small scale water butt	Rainwater Harvesting system for individual homes and buildings	Large scale surface water harvesting
Greywater Recycling		Small systems for individual homes	Largest scale systems for commercial and mixed-use sites

5.1.3 In this instance, rainwater harvesting is proposed to provide water to the toilets and washing machine within the dwelling as well as for all external usage. The installation of water reusing technologies will further reduce the water demand on site, depending on the harvesting tank installed. The proposed roof area is sufficient to provide the required water to the property via a rainwater harvesting tank as well as has sufficient capacity for a 35-day drought period. **See Appendix C**.

5.1.4 By installing the water efficient devices listed above as well as the rainwater harvesting technologies listed above, the total demand will be reduced to:

13.52 x 61.6

= 836.5 l/day

- *13.52 (Total site occupancy) x 61.6 (Appendix B – Water calculator for proposed fittings with RWH)*

Table 9 Part G rainwater collection calculator - Plot 1

Rainwater Collection Calculation	
Collection Area (m²)	78
Yield Coefficient	0.8
Depth of rainfall (mm/year)	793
Daily rainwater collection (litres)	135.5
Number of occupants	2.47
Daily Rainwater per person (litres)	55

Table 10 Part G rainwater collection calculator - Plot 2

Rainwater Collection Calculation	
Collection Area (m²)	78
Yield Coefficient	0.8
Depth of rainfall (mm/year)	793
Daily rainwater collection (litres)	135.5
Number of occupants	2.47
Daily Rainwater per person (litres)	55

Table 11 Part G rainwater collection calculator – Plot 3

Rainwater Collection Calculation	
Collection Area (m²)	191
Yield Coefficient	0.8
Depth of rainfall (mm/year)	793
Daily rainwater collection (litres)	331.75
Number of occupants	2.88
Daily Rainwater per person (litres)	115.2

Table 12 Part G rainwater collection calculator – Plot 4

Rainwater Collection Calculation	
Collection Area (m²)	112
Yield Coefficient	0.8
Depth of rainfall (mm/year)	793
Daily rainwater collection (litres)	194.5
Number of occupants	2.88
Daily Rainwater per person (litres)	67.5

Table 13 Part G rainwater collection calculator – Plot 5

Rainwater Collection Calculation	
Collection Area (m²)	158
Yield Coefficient	0.8
Depth of rainfall (mm/year)	793
Daily rainwater collection (litres)	274.4
Number of occupants	2.88
Daily Rainwater per person (litres)	95.27

5.1.5 A calculation is to be made to ensure that the rainwater harvested is greater than the rainwater demand within the dwelling. The following is a calculation for 5% of the annual rainwater yield and has been calculated using Rainfall data from the National River Flow Archive which provides annual rainfall data as recorded by the Met office and follows the intermediate approach as detailed within BS 8515:2009.

5.1.6 Using the rainfall catchment data provided by the National River Flow Archives, the closest station point to the site is 41010 – Adur W Branch at Hatterell Bridge:

Fig 4. Rainfall Station

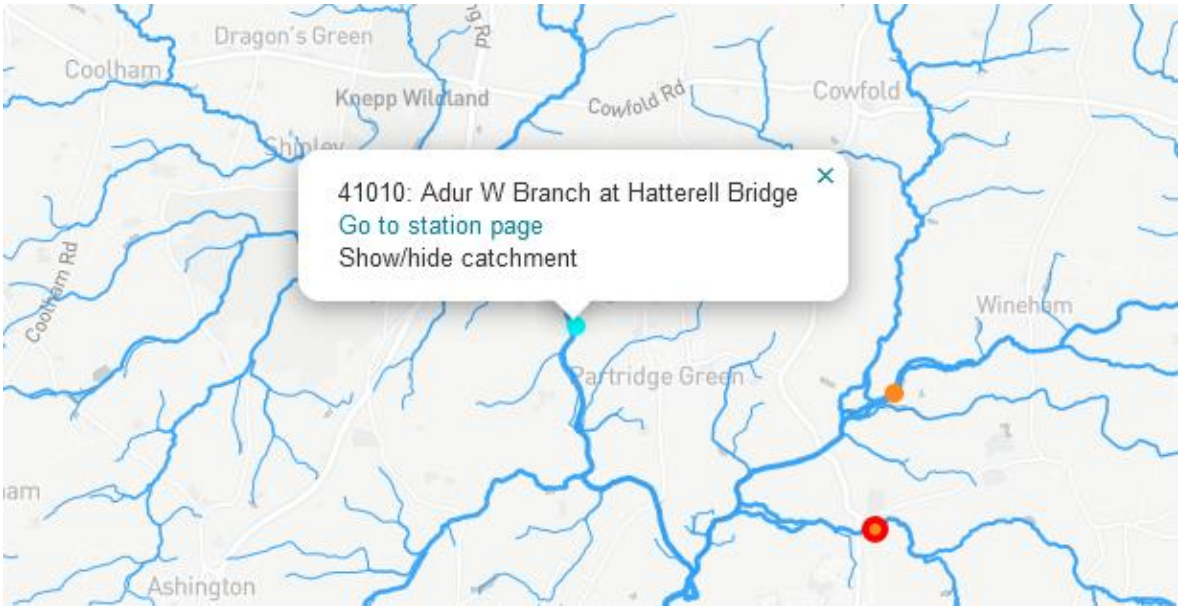

5.1.7 The latest data available for this station is SAAR 1961-1990, which shows that the depth of rainfall in the area is 793mm. The following calculations will cover the entire site instead of the individual plots.

$$Y_R = A \times e \times h \times n \times 0.05$$

Where:

Y_R = the annual rainwater yield (l)
A = The collecting area (m^2)
e = yield coefficient (%)
h = depth of rainfall (mm)
n = hydraulic filter efficiency

18,592.7 = 617 x 0.8 x 793 x 0.95 x 0.05

5.1.8 In order to ensure there is sufficient roof area, another calculation from BS 8515:2009 must be carried out in order to calculate the annual demand within the property. The following is a calculation for 5% of the annual non-potable water demand.

$$D_N = P_d \times n \times 365 \times 0.05$$

Where:

D_N = the annual non-potable water demand (l)
P_d = The daily requirement per person (l)
n = number of persons

8847.7 = 35.7 x 13.58 x 365 x 0.05

5.1.9 To ensure there is sufficient area to allow a 35-day drought storage, an extra 35 days is to be included:

9696.12 = 35.7 x 13.58 x 400 x 0.05

5.1.10 From the above water calculations, we have:

- Proposed water usage rate of 110 litres/person/day based on 'HDPF'
- Which can then be reduced to a proposed water usage rate of 73.83 litres/person/day with water efficient devices and rainwater harvesting

5.1.11 In order to provide a cumulative consumption comparison between the existing and the proposed water usage, the occupancy rates would be for 'as existing' and 'as proposed':

- Proposed water demand from HDPF – 110 l/p/d at an overall occupancy rate 13.58 people = **1493.8 l/day.**
- Proposed Water Demand with Rainwater harvesting – 73.83 l/p/d at an overall occupancy rate of 13.58 people = **1002.6 l/day**

5.1.12 The client is willing to install a single 5,000 l rainwater harvesting tank per plot in order to achieve total self-sufficiency within the property. The harvesting tank is to be fitted with the following equipment in order to get the rainwater to a level safe for human consumption.

- Aerator
- Lowara 0.55 kW variable speed booster set
- PREFILT103/4 10" prefilter housing
- CRT10SW-05 5 micro sediment filter
- UV-CS165 ultraviolet steriliser
- WH1MH Whole house water filter
- 10" x 54" pH correction unit

5.1.13 The likely contaminants associated with rainwater harvesting systems and how to treat them are:

- Dust – Sediment Filter
- Bacteria, including Clostridium Prefringers – High dose of UV treatment
- Nitrates – Heavy Metal reduction filter
- Organics – Carbon Filter

5.1.14 It is suggested that the supply is tested once the equipment is initially fitted to ensure effective operation then test the water every 6 months to ensure continued performance. The water treatment equipment will need to be maintained as per the manufacturers guidelines which are all laid out clearly in the equipment quote from Silverline Ltd. They will also send the end user reminders when the equipment needs servicing. The water is to be tested every 6 months, and results kept, there should be a record kept of all maintenance undertaken on the equipment as per the manufacturer's guidelines.

5.1.15 It has been confirmed by Silverline UK Ltd that the only maintenance of the system that is required is to replace filters are certain intervals. It is recommended that the:

- Aerator
- Lowara 0.55 kW variable speed booster set
- PREFILT103/4 10" prefilter housing
- CRT10SW-05 5 micro sediment filter is to be replaced every 6 months, or more frequently if it reduced water flow is experienced.
- UV-CS165 ultraviolet steriliser will need the lamps replacing every 12 months. It is also recommended that the quartz sleeve is removed and cleaned every 12 months to ensure light can get to the water.
- WH1MH Whole house water filter will require having the filter media replaced every 12 months.
- 10" x 54" pH correction unit will be required having the media topped up every year.

Fig. 3 Schematic view of treatment system

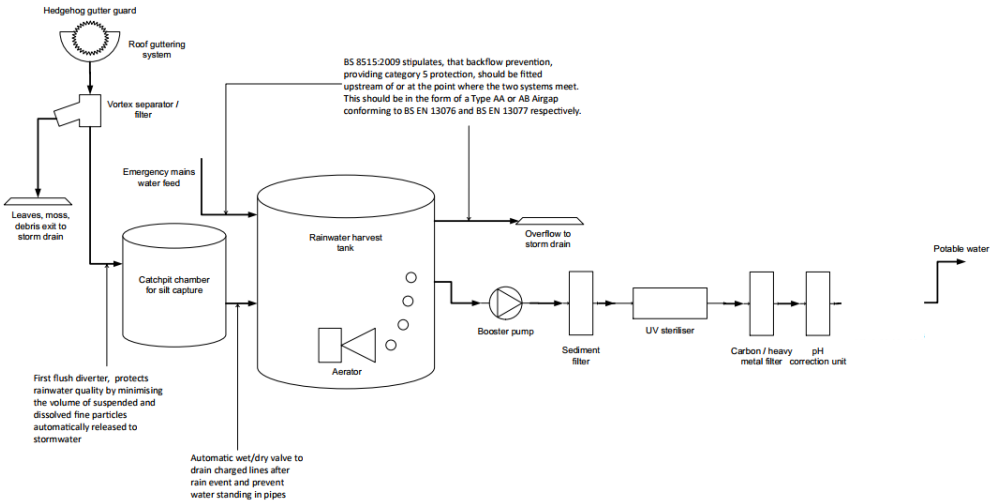

5.1.16 Despite the proposed rainwater harvesting tank being below ground, extra precautions can be undertaken by ensuring that the rainwater harvesting tank is to be black in order to stop sunlight reaching the stored water, keeping the temperatures lower and allowing for higher oxygen concentration whilst also preventing algae and bacteria growth. The filters in place are implemented post storage.

5.1.17 The system will be considered as a private water supply and therefore it will be governed by the Private Water Supply Regulations 2016, which is regulated by the local council's Environmental Health officer or Pollution Control Officer. Following completion of the system, a treated water sample will be taken and tested by an independent UKAS accredited lab. The sample will be collected by a suitably qualified person with Drinking Water Inspectorate (DWI) certification for sampling water supplies. The system will be inspected every 6 months and maintenance procedures will be carried out to ensure that the water is treated property.

5.1.18 Inspection and sampling for E.Coli, TVC and Coliforms will be carried out twice yearly. The UV Steriliser will have lamps replaced every year, the filter media in the water filter will be replaced every 2 years and the media within the pH correction unit will be replaced every year.

5.2 Rainwater Harvesting Tank Maintenance Specification

5.2.1 Rainwater Harvesting Tank

In order to maintain the functioning of the rainwater harvesting tanks, the following maintenance requirements should be adhered to:

Operation and maintenance requirements for rainwater harvesting tanks		
Maintenance Schedule	**Required Action**	**Typical Frequency**
Regular Maintenance	Ensure that all inlets and outlets are clear of debris and blockage	Weekly
	Remove debris inlets and outlets	Weekly
	Inspect first flush diverter to ensure it is working correctly and not clogged	Weekly – Clean if necessary
	Clean Filter screens	Monthly – Replace if damaged
	Inspect the tank for sediment build-up and any signs of algae	Monthly
	Inspect roof and gutters and clear of all debris	Every 3 months
	Inspect pump for any signs of wear or damage and test to ensure it is functioning correctly	Every 3 months
	Check bottom of the tank for sediment build-up and clear if necessary	Every 6 months
	Ensure all downpipes are clear and functioning correctly and clear if necessary	Every 6 months
	Test water	Every 6 months
	Thorough tank cleaning – drain tank, scrub interior and rinse	Annually or as required
	Service the pump and filtration system and replace any worn parts	Annually
	Inspect overflow to ensure it is working correctly and clear any obstructions	Annually
Monitoring	Monitor Water levels	Annually
	Inspect for pests e.g mosquitoes and take measures to prevent	As required

6 Step 3 – Offsetting remaining water demand

6.1.1 There is an existing dwelling on site which is to be demolished as part of the proposed works. The past 3 years of water bills show that the site uses on average of **235.7 l/day**. There are currently 2 occupants within the existing dwelling and the average water usage is **117.85 l/p/day.**

Date	Previous Reading	New Reading	Water usage (m^3/litres)	Water used (l/day)
14 Sep '20 – 8 June '21	859	912	53 / 53,000	198.5
8 June '21 – 8 Sep '21	912	936	24 / 24,000	260.9
8 Sep '21 – 31 Aug '22	936	1027	91 / 91,000	254.9
31 Aug '22 – 25 Aug '23	1027	1109	82 / 82,000	228.4
Average				235.7 l/day

6.1.2 As this dwelling is to be demolished, the existing water demand can be subtracted from the proposed. Therefore, the remaining water demand left to offset will be reduced from **836.5 l/day** to **600.8l/day.**

6.1.3 In order to offset the increase in water demand from the proposed development, the client is willing to purchase water credits from a supplier. The client is to purchase **631** credits to offset the proposed development and account for a 5% contingency that is set out by Horsham DC.

6.1.4 The provided water credits are being provided from an offsetting scheme located within RH13 6PS. A detailed water offsetting report is to be provided under a separate cover and a redacted water credit purchase contract can be supplied upon request. The former sets out how the water offsetting will be achieved and operated for the lifetime of the development.

7 Conclusion

7.1.1 To summarise:

- The proposed development will use on average **1487.2 l/day** prior to any mitigation techniques.
- This water demand can be reduced to **1203.8 l/day** through the installation of water reducing appliances
- Re-using the water through rainwater harvesting tanks can further reduce the water demand down to **836.5 l/day**
- Through the removal of the existing dwelling, the existing water demand of **235.7 l/day** can be removed from the proposed water demand which results in a proposed demand of **600.8 l/day** left to be offset.
- The remaining water demand is to be offset by the purchase of **631** water credits.

8 Appendices

8.1 Appendix A:

Table 10 – Water Calculator from Building Regulations Part G – Information input from proposed site with water efficient devices from Table 6.

The Water Calculator for New Dwellings with Water efficient measures					
Installation Type	Unit of measure	Volume/ flow rate	Use factor	Fixed use	Litres/person/day
WC (Single Use)	Flush volume (l)	0	4.42	0	0
WC (Dual Flush)	Full Flush Vol.	4	1.46	0	5.84
	Part Flush vol.	2.6	2.96	0	7.696
WC (Multiple Fittings)	Average effective flush volume (l)	0	4.42	0	0
Taps (excl. Kitchen)	Flow rate (l/min)	2.5	1.58	1.58	5.53
Bath (shower also present)	Capacity to overflow (l)	145	0.11	0	15.95
Shower (bath also present)	Flow rate (l/min)	7	4.37	0	30.6
Bath only	Capacity to overflow (l)	0	0.5	0	0
Shower only	Flow rate (l/min)		5.6	0	0
Kitchen sink taps	Flow rate (l/min)	5	0.44	10.36	12.56
Washing Machine	Litres/kg dry load	5.5	2.1	0	11.55
Dishwasher	litres/place setting	0.73	3.6	0	2.62
Waste disposal unit	litres/use	0	3.08	0	0
Water softener	litres/person/day	0	1	0	0
		Total Calculated use (l/p/d)			92.358
		Contribution from greywater (l/p/d)			0
		Contribution from rainwater (l/p/d)			0
		Normalisation factor			0.91
		External water use			5
		Total water consumption (36(1)) (l/p/d)			89.045

8.2 Appendix B:

Table 11 – Water Calculator from Building Regulations Part G – Information input from proposed site with water efficient devices from Table 6 with Rainwater Harvesting.

The Water Calculator for New Dwellings with Water efficient measures					
Installation Type	Unit of measure	Volume/ flow rate	Use factor	Fixed use	Litres/person/day
WC (Single Use)	Flush volume (l)	0	4.42	0	0
WC (Dual Flush)	Full Flush Vol.	4	1.46	0	5.84
	Part Flush vol.	2.6	2.96	0	7.696
WC (Multiple Fittings)	Average effective flush volume (l)	0	4.42	0	0
Taps (excl. Kitchen)	Flow rate (l/min)	2.5	1.58	1.58	5.53
Bath (shower also present)	Capacity to overflow (l)	145	0.11	0	15.95
Shower (bath also present)	Flow rate (l/min)	7	4.37	0	30.6
Bath only	Capacity to overflow (l)	0	0.5	0	0
Shower only	Flow rate (l/min)		5.6	0	0
Kitchen sink taps	Flow rate (l/min)	5	0.44	10.36	12.56
Washing Machine	Litres/kg dry load	5.5	2.1	0	11.55
Dishwasher	litres/place setting	0.73	3.6	0	2.62
Waste disposal unit	litres/use	0	3.08	0	0
Water softener	litres/person/day	0	1	0	0
		Total Calculated use (l/p/d)			92.358
		Contribution from greywater (l/p/d)			0
		Contribution from rainwater (l/p/d)			30.086
		Normalisation factor			0.91
		External water use			5
		Total water consumption (36(1)) (l/p/d)			61.66

8.3 Appendix C:

Rainwater Harvesting Tank Size Calculator (smallest):

COLLECTABLE ROOF AREA (M²)

Main Building	Width:		Length:	Rain Collection Area:	0	m²
Extension one	Width:		Length:	Rain Collection Area:	0	m²
Extension Two	Width:		Length:	Rain Collection Area:	0	m²
Extension Three	Width:		Length:	Rain Collection Area:	0	m²
Or the total roof area, if you already know it:		78		Total area of collectable roof space:	78	m²
Select Your Region	England SE & Central			Average rainfall per year in your region:	64	L
Collectable rainwater per annum in litres - discounted by 20% to account for water loss					**39936**	**L**

USE OF RAINWATER IN THE BUILDING

	people:	bedrooms:		
Number of people or bedrooms in the building -	3	0		
☑ Number of clothes washing cycles per day (*50 litres each*)	0.75 Cycles		37.50	L
☑ Number of toilet flushes per day (*4.42 flushes per person, average 5 litres each*)	13.26 Flushes		66.30	L
Outdoor use in litres, per person per day (*recommended 5 litres per person per day*)	5		15.00	L
Amount of water you require every day			118.8	L
Amount of water you require every year	**DEMAND**		**43362**	**L**

FINAL FIGURES

How many days drought protection do you need? Typically 21 (18 minimum)	35	
Capacity of water storage in litres required for drought protection	4158.00	L
The lesser of YIELD (blue) or DEMAND (green) per annum	39936	L
Therefore, volume of rainwater storage required	**3829**	**L**

CONCLUSION

Is there sufficient roof water available:		YES
Recommended tank size from our shallow dig range:	F-Line Range:	5000 LITRE F-LINE TANK

8.4 Appendix D:

Rainwater Harvesting Tank Size Calculator (Largest):

COLLECTABLE ROOF AREA (M²)

Main Building	Width:		Length:		Rain Collection Area:	0	m²
Extension one	Width:		Length:		Rain Collection Area:	0	m²
Extension Two	Width:		Length:		Rain Collection Area:	0	m²
Extension Three	Width:		Length:		Rain Collection Area:	0	m²
Or the total roof area, if you already know it:				191	Total area of collectable roof space:	191	m²
Select Your Region		England SE & Central			Average rainfall per year in your region:	64	L
Collectable rainwater per annum in litres - discounted by 20% to account for water loss						**97792**	**L**

USE OF RAINWATER IN THE BUILDING

	people:	*bedrooms:*	
Number of people or bedrooms in the building -	3	0	
☑ Number of clothes washing cycles per day (*50 litres each*)	0.75 Cycles	37.50	L
☑ Number of toilet flushes per day (*4.42 flushes per person, average 5 litres each*)	13.26 Flushes	66.30	L
Outdoor use in litres, per person per day (*recommended 5 litres per person per day*)	5	15.00	L
Amount of water you require every day		118.8	L
Amount of water you require every year	**DEMAND**	**43362**	**L**

FINAL FIGURES

How many days drought protection do you need? Typically 21 (18 minimum)	35	
Capacity of water storage in litres required for drought protection	4158.00	L
The lesser of YIELD (blue) or DEMAND (green) per annum	43362	L
Therefore, volume of rainwater storage required	**4158**	**L**

CONCLUSION

Is there sufficient roof water available:		YES
Recommended tank size from our shallow dig range:	F-Line Range:	5000 LITRE F-LINE TANK

8.5 Appendix E:

Example Rainwater Harvesting Tank Brochure:

Carat Rainwater Harvesting solutions



RAINWATER HARVESTING

WASTEWATER SYSTEMS

RAINWATER RETENTION

DRINKING WATER RESERVOIRS

Edition 2007
Salesfolder C 27-2 Carat EN

Benefits of the Carat System

Flexible, stackable, user-friendly and better for the environment

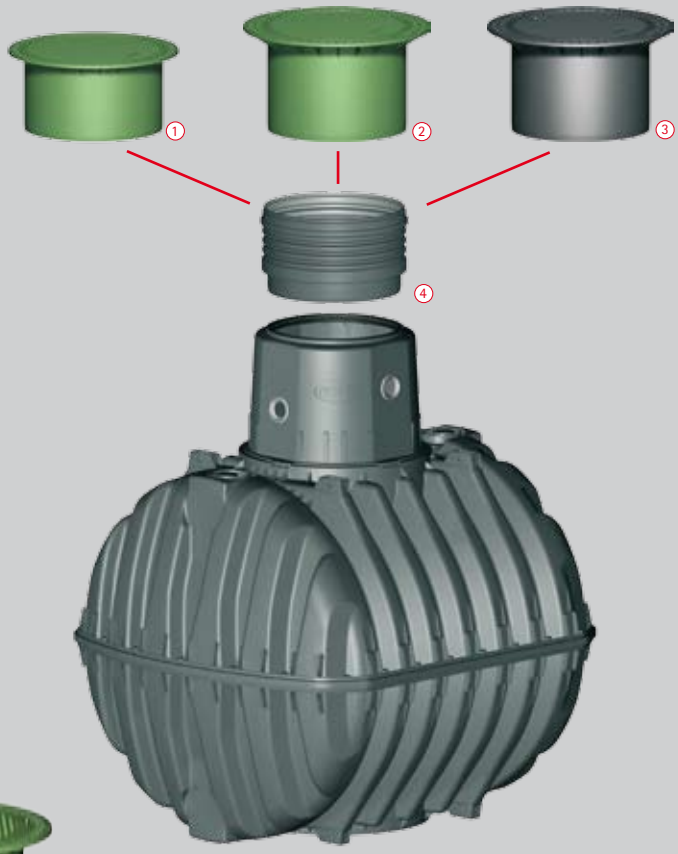

① **Mini telescopic dome shaft with PE lid**
Designed for non-vehicle loading and ideal for garden use, the shaft can be adjusted from 750 - 950 mm and tilted up to 5% to sit flush with the ground level. Includes a PE lid with child safety lock. This item is supplied in green.

② **Maxi telescopic dome shaft with PE lid**
Designed for non-vehicle loading and ideal for the Complete Package (Eco-Plus), the shaft can be adjusted from 750 - 1,050 mm and tilted up to 5% to sit flush with the ground level. Includes PE lid with child safety lock. This item is supplied in green.

③ **Vehicle loading telescopic dome shaft with cast iron lid**
Designed for vehicle loading applications, the tank can be adjusted from 750 -1,050 mm and tilted up to 5% to sit flush with the ground level. Includes child-safe cast iron cover. This item is supplied in dark grey.

④ **Extension**
For use with the telescopic dome shaft to increase the height of the lid from 1,000 - 1,500 mm. Always refer to installation instructions when usig this item.





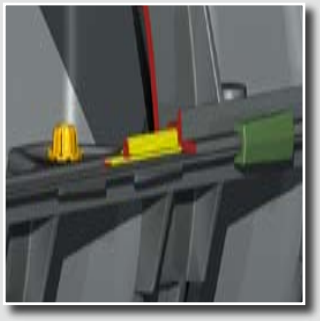

Logistical advantages of the Carat

The Carat tank consists of two half shells which can be stacked on top of each other, allowing multiple tanks to be stacked on a single pallet for shipping. For example, it is possible to stack five 6,500 ltr Carat tanks, or nine 2,700 ltr Carat tanks on a single pallet. This allows a standard 40 ft. shipping container to house a total tank volume of up to 130,000 ltrs! The tanks unique stacking feature directly reduces transport costs and environmental impact from vehicle emissions, whilst allowing shipments to any destination in the world.

Easy and safe assembly

- The patented quick connection (illustrated in green), allows the Carat tank to be assembled without screws in only few minutes. Disassembly is possible at any time.
- The first-class EPDM material used in the profile sealings (illustrated in yellow), has been laboratory tested to last more than 25 years.
- The centering bolt (illustrated in orange) assures the accurate and easy assembly of the two half shells preventing any leaks

The Carat

The first Rainwater underground tank of its kind!

NEW

Unique manufacturing process

The GRAF Carat underground tank is unlike any other underground tank in the world. It is the largest tank of its kind to be manufactured by injection compression moulding. This technique provides the tank with unbeatable stability and ensures that each component is produced with the highest of accuracy.

Unlike other underground tanks, the wall thickness is equal in all areas of the tank. The production tolerances are kept to a minimum, resulting in a product of the highest quality, which is strong, accurate, reliable and extremely user-friendly.

To manufacture the Carat range, one of the worlds largest injection moulding systems had to be developed.

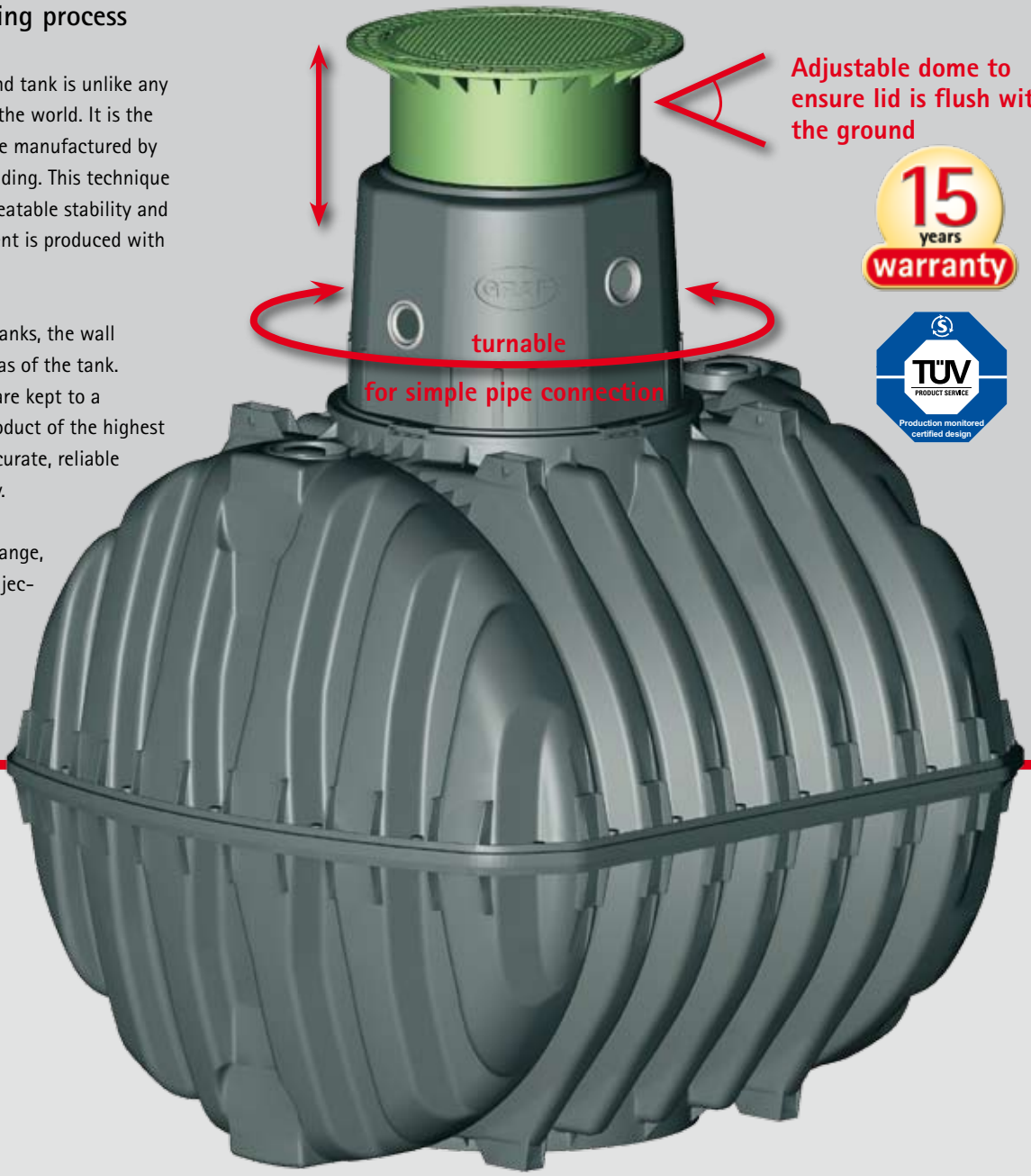

The Carat underground tank is made from Duralen®, a high quality material that is extremely rigid and impact resistant, therefore ideally suited for producing underground tanks. With very low warping characteristics and high stiffness, this material provides high stability and a unique life expectancy. Duralen® can also be easily recycled which reduces waste and environmental impact.

Duralen®

The modular Carat system

Choose your tank size

NEW

Carat, vehicle bearing underground tank

Size 2,700 – 13,000 litres
(700 – 3,400 US-Gallons).
Designed to be used in conjunction with the vehicle loading telescope dome shaft. The access dome is designed in accordance to DIN testing.

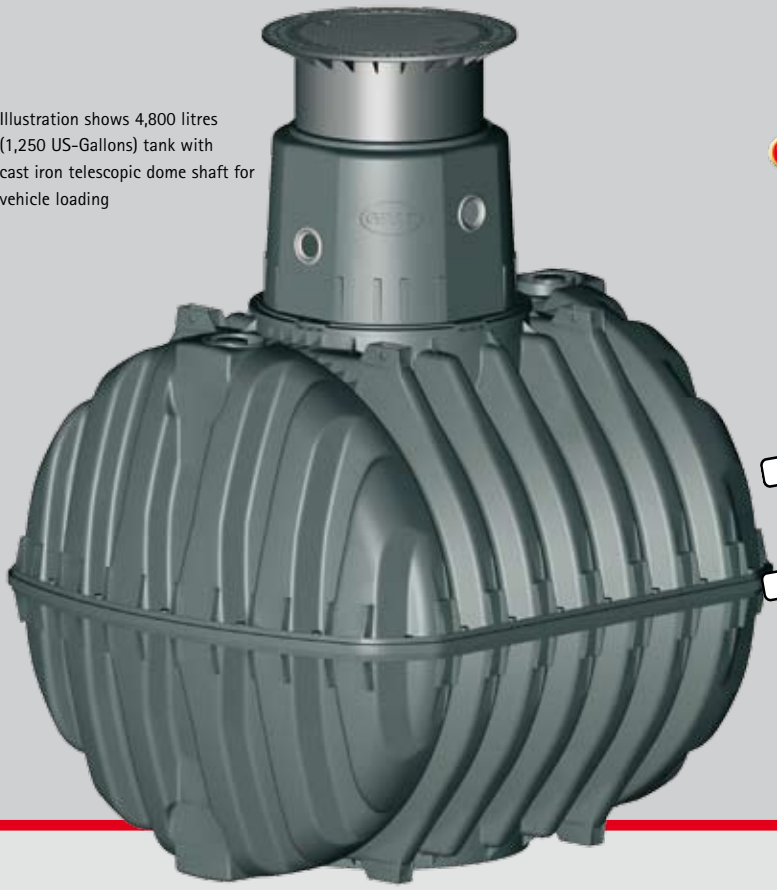

Illustration shows 4,800 litres (1,250 US-Gallons) tank with cast iron telescopic dome shaft for vehicle loading

15 years warranty

EINSTIEGSDOM nach DIN EINSTIEGSDOM

TÜV

European 0870877 Patent

US 5878907 Patent

Volume

Litres	US-Gallons
2,700	700
3,750	1,000
4,800	1,250
6,500	1,700
7,500*	2000*
9,600*	2,500*
13,000*	3,400*

* Set consisting of two Carat underground tanks

Technical data

Dimensions/weight	2,700 L 700 US-Gallons	3,750 L 1000 US-Gallons	4,800 L 1,250 US-Gallons	6,500 L 1,700 US-Gallons	7,500 L* 1,850 US-Gallons	9,600 L* 2,500 US-Gallons	13,000 L* 3,400 US-Gallons
Length	2,080 mm (81.9 inches)	2,280 mm (89.8 inches)	2,280 mm (89.8 inches)	2,390 mm (94.1 inches)	Set consisting of two Carat underground tanks		
Width	1,565 mm (61.6 inches)	1,755 mm (69.1 inches)	1,985 mm (78.1 inches)	2,190 mm (86.2 inches)			
Heigth (including tank dome)	2,010 mm (79.1 inches)	2,200 mm (86.6 inches)	2,430 mm (95.7 inches)	2,710 mm (106.7 inches)			
Height of tank dome	610 mm (24.0 inches)						
Internal Ø tank dome	800 mm (31,5 inches)						
Weight	120 kg (265 lbs.)	150 kg (331 lbs.)	185 kg (408 lbs.)	220 kg (485 lbs.)			
Load							
Max. axle load	Car-bearing				see 3,750 L tank	see 4,800 L tank*	see 6,500 L tank*
Earth covering	800 - 1,200 mm (31.5 - 47.2 inches)						
Groundwater							
Groundwater stable	up to the middle of the tank				see 3,750 L tank	see 4,800 L tank	see 6,500 L tank
Required earth covering	800 mm (31.5 inches)						



For dimensions see 3,750 L tank*



For dimensions see 4,800 L tank*



For dimensions see 6,500 L tank*

Garden Comfort package

The simple garden solution with submersible pump system



Carat Garden Comfort underground tank package

- Simple to install and use
- Use a simple hose connection socket and pressure sensitive pump for automatic water activation, purposely designed for the Gardena® system
- Low visual impact
- Reduces electricity consumption by using a pressure drop activation system, so that electricity is only used when required

Scope of supply

① Carat underground tank
② Mini telescopic dome shaft for pedestrian loading with an adjustable PE lid
③ Filter package 2, consisting of:
- Internal Universal Filter 3
- Inflow stilling system for controlling the water inflow
- Overflow siphon and rodent guard
- Spannfix pipe connection sleeve

④ Garden Comfort pump package, consists of:
- Integra-Duo® 1100 Submersible pump, with protection against dry running and automatic Start / Stop function
- Floating water extraction unit
- Water hose connection box
- 10 m of pressure hose

Volume

Litres	US-Gallons
2,700	700
3,750	1,000
4,800	1,250
6,500	1,700
7,500*	2,000*
9,600*	2,500*
13,000*	3,400*

* Set consisting of two Carat underground tanks

Vehicle loading version available on request

Eco-Plus package

The ideal solution for use in the home and garden

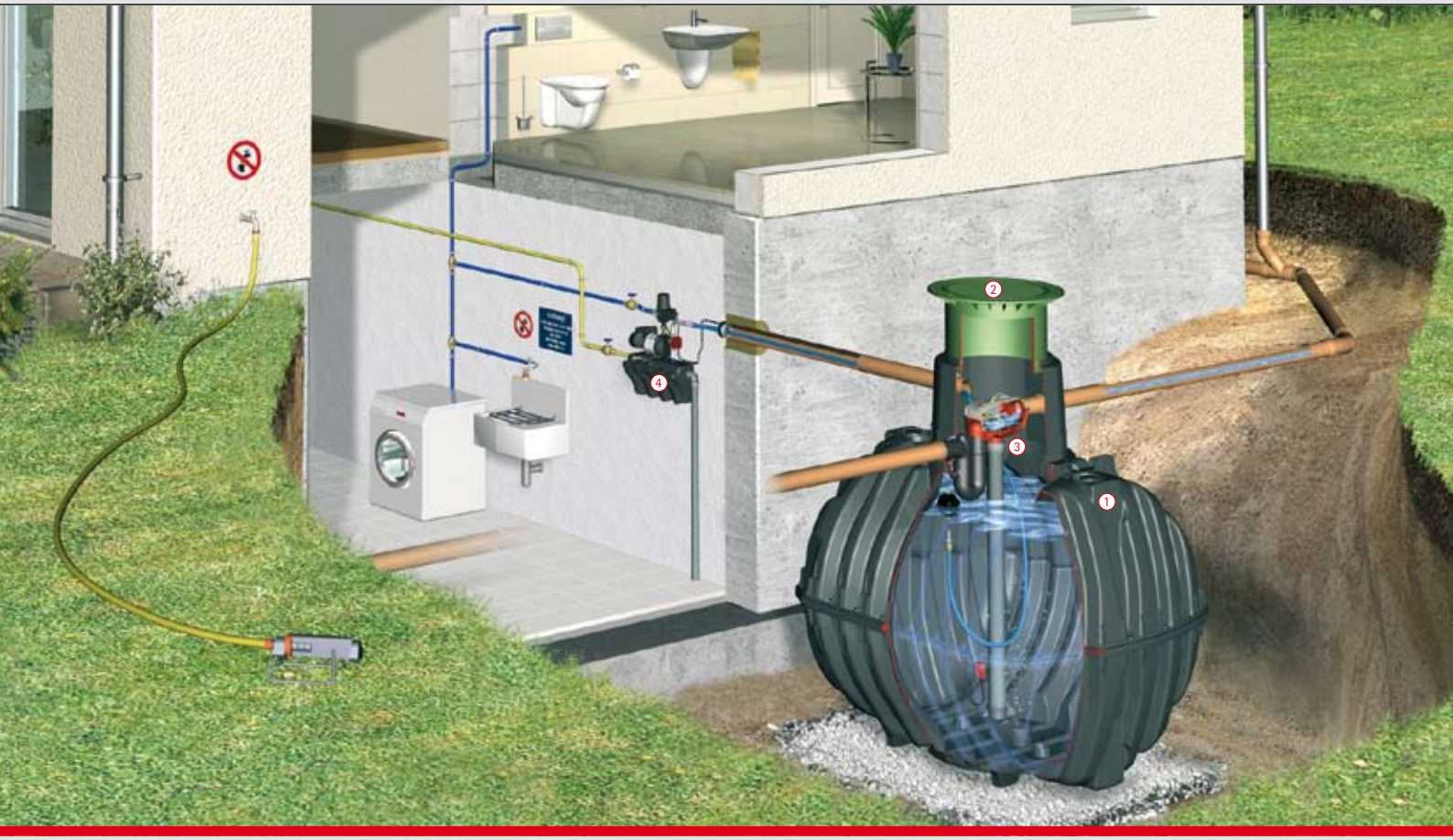

Carat underground tank package Eco Plus

- Economic package solution
- Patented filter technology and in-house pump system with automatic switch-over to mains water supply
- Easy to assemble due to modular components
- Float switch controlled
- Only one cover viewable on the surface

Scope of supply

① Carat underground tank
② Maxi telescopic dome shaft for pedestrian loading with an adjustable PE lid
③ Filter package 3, consisting of:
- Internal Optimax-Pro (self-cleaning) filter
- Inflow stilling system for controlling the water inflow
- Overflow siphon and rodent guard
- Spannfix pipe connection sleeve

④ Eco-Plus pump package consists of:
- Water supply control unit
- Floating water extraction unit
- DN 100 wall duct
- Labelling set
- Suction pipe

Volume

Litres	US-Gallons
3,750	1,000
4,800	1,250
6,500	1,700
7,500*	2,000*
9,600*	2,500*
13,000*	3,400*

*Set consisting of two Carat underground tanks

Vehicle loading version available on request

Internal filter technology

NEW

Efficient cleaning system with high water yield

Optimax Pro, self-cleaning Filter

Advantages

- Provides over 95% water yield
- Utilises patented, high quality filter technology
- Low-maintenance (self-cleaning)
- TÜV-tested to German standards
- Space-saving filter technology inside the tank
- Filter housing can be easily removed without the need for tools
- Transparent lid for filter visibility
- **Can manage roof areas up to 350 m²**
- Standard 100 mm connections
- Self cleaning Opticlean system available as an optional extra
- Low offset height of 165 mm between inlet and outlet



Universal Filter 3

up to 100% water yield

Advantages

- Allows up to 100% water yield
- Ideal for small roof surfaces
- Space-saving filter technology inside the tank
- The Filter housing can be easily removed without the need for tools
- Ideally suited when connecting the tank to a soakaway
- 250 mm offset height between inlet and outlet
- **Can manage roof areas up to 350 m²**
- Standard 100 mm connections
- Emergency overflow system available (optional extra)

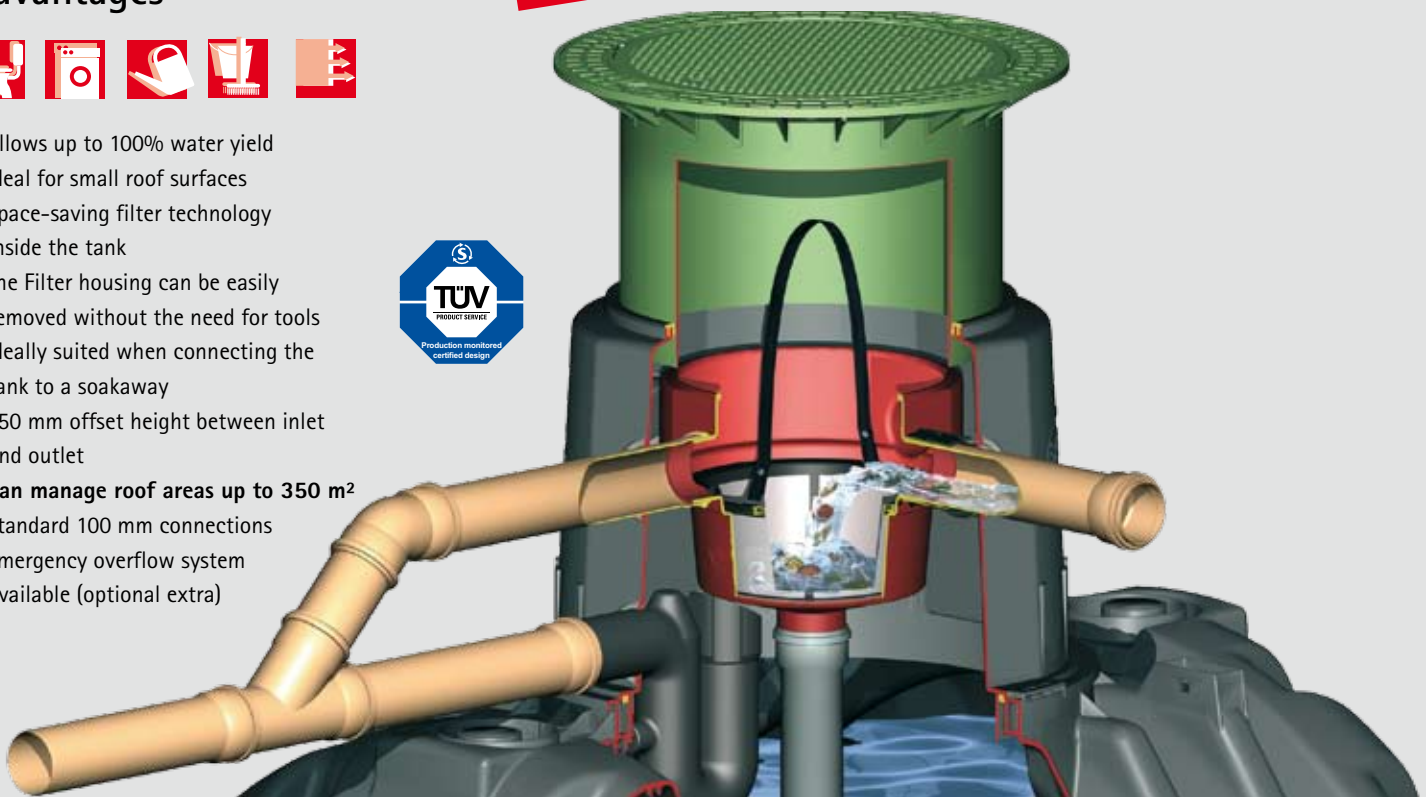

GRAF – Setting the standards in quality



Production site at Teningen (Germany) near Freiburg



Production site at Dachstein (France)

High Quality Manufacturing

GRAF has invested more than € 20 million in a new production site specially set up for the new CARAT range. The new facility has an approximate surface area of 155,000 m² - that equals 31 football pitches - one of the most modern production facilities for plastic products in the world

For over 40 years, Otto Graf GmbH has been offering high-class plastic products to its customers. In 1974 GRAF developed its first pioneering range of rainwater harvesting products. Now GRAF is recognised as Germany's number one rainwater harvesting brand and proudly presents the new premium Carat range of the tanks. A range which is manufactured in one of the most modern and efficent plastic manufacturing facilities in the world!

RAINWATER HARVESTING



STORMWATER MANAGEMENT



AGRICULTURAL CONTAINERS



SEWAGE TREATMENT PLANTS



Warranty clause:
The warranty mentioned in this brochure only refers to the tank in question and not to the accessories. Within the warranty period we grant free replacement of the material. Further benefits are excluded. Pre-condition for warranty benefits are proper handling, assembly and installation according to the mounting guidelines.

N.B. Protect tanks from frost when installed above-ground! In case of groundwater installation, please contact us for further information previous to the purchase!

For all indications of measurements in this brochure we reserve a tolerance of +/- 3%. The useful volume of the tanks may be up to 10% lower than the tank capacity, according to the connecting option.

Technical modifications and further development of the different products are subject to change. Errors excepted.

Otto Graf GmbH
Kunststofferzeugnisse
Carl-Zeiss-Straße 2-6
79331 Teningen / Germany

Phone: +49 (0) 76 41/5 89-0
Fax: +49 (0) 76 41/5 89-50
info@graf-online.de
www.graf-online.de

Over 40 years of quality and innovation

© Otto Graf GmbH, Teningen. Germany
Reproduction – also in extracts – only with written authorisation.

8.6 Appendix F:

Potential Washing Machine data sheet – Fisher & Paykel WM1490F1 9kg:

Model	Cycle	Temp. (°C)	Load (kg)	Program Time On Display (min)	Remaining Moisture Content (%)	Energy Consumption (kWh/Cycle)	Water Consumption (L/Cycle)
WM1490F	Cottons Eco*	60	9	198	47	0.67	50
	Cottons	40	9	138	56	1.17	84
	Everyday	40	8	59	48	0.81	96
	Heavy	60	8	130	48	2.19	115
	Synthetic	40	4	121	40	0.98	53
	Delicate	40	4	45	65	0.70	65
	Sports	40	4	50	43	0.55	56

8.7 Appendix G:

Dish Washer Data Sheet – Bosch SMS6EDI02G:

Product information sheet COMMISSION DELEGATED REGULATION (EU) 2019/2017				
Supplier's name or trade mark [a] [b] :	Bosch			
Supplier's address [a] [b] :	BSH Hausgeräte GmbH, Carl-Wery-Str. 34, 81739 Munich, Germany			
Model identifier [a] :	SMS6EDI02G			
General product parameters:				
Parameter	Value	Parameter	Value	
Rated capacity [d] (ps)	13	Dimensions in cm [a] [b]	Height	85
			Width	60
			Depth	60
EEI [d]	44	Energy efficiency class [d]	C [c]	
Cleaning performance index [d]	1.121	Drying performance index [d]	1.061	
Energy consumption in kWh [per cycle], based on the eco programme using cold water fill. Actual energy consumption will depend on how the appliance is used.	0.736	Water consumption in litres [per cycle], based on the eco programme. Actual water consumption will depend on how the appliance is used and on the hardness of the water.	9.5	
Programme duration [d] (h:min)	4:35	Type	Freestanding	
Airborne acoustical noise emissions [d] (dB(A) re 1 pW)	46	Airborne acoustical noise emission class [d]	C [c]	
Off-mode (W) (if applicable)	-	Standby mode (W) (if applicable)	0.50	
Delay start (W) (if applicable)	4.00	Networked standby (W) (if applicable)	2.00	
Minimum duration of the guarantee offered by the supplier [a] [b] :			24 months	
Additional information [a] [b] :				
Weblink to the supplier's website, where the information in point 6 of Annex II to Commission Regulation (EU) 2019/2022 is found: www.bosch-home.com/energylabel				