FLUSH 70 CROSS SECTION - 72mm

P91034 Head Drip / Ventilator Cover

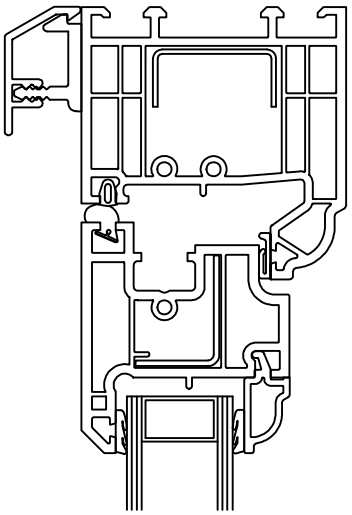

Section A

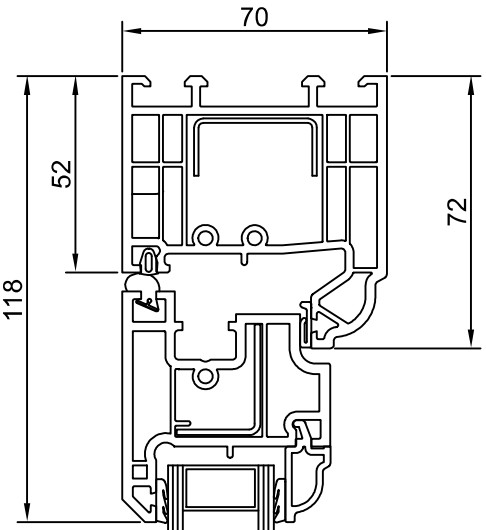

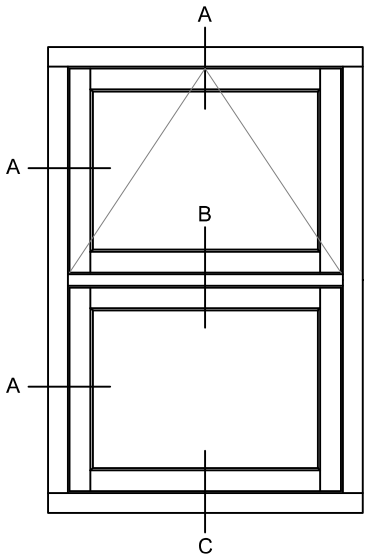

Section B

3851
Flush Transom Drip Bar

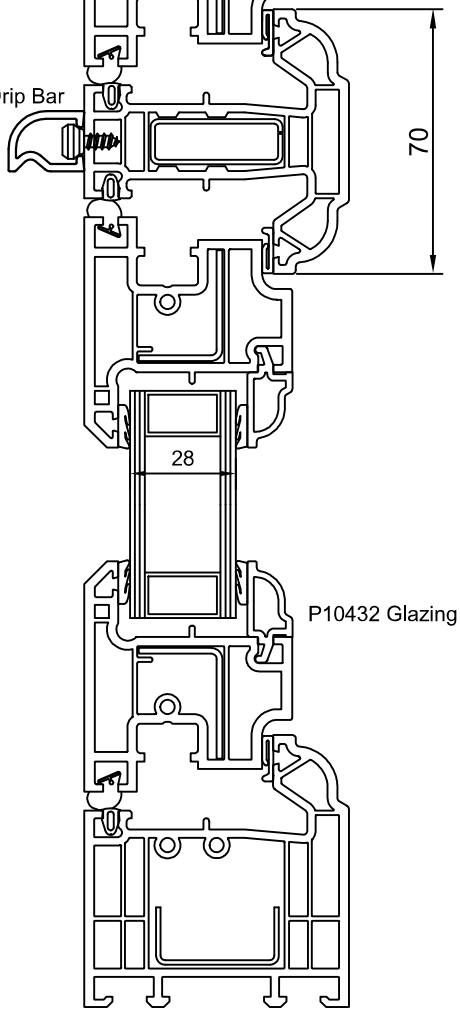

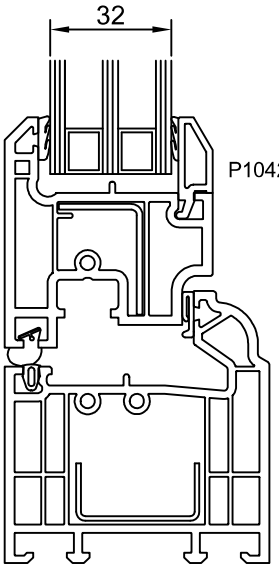

Section C

P10426 Glazing Bead

P10432 Glazing Bead

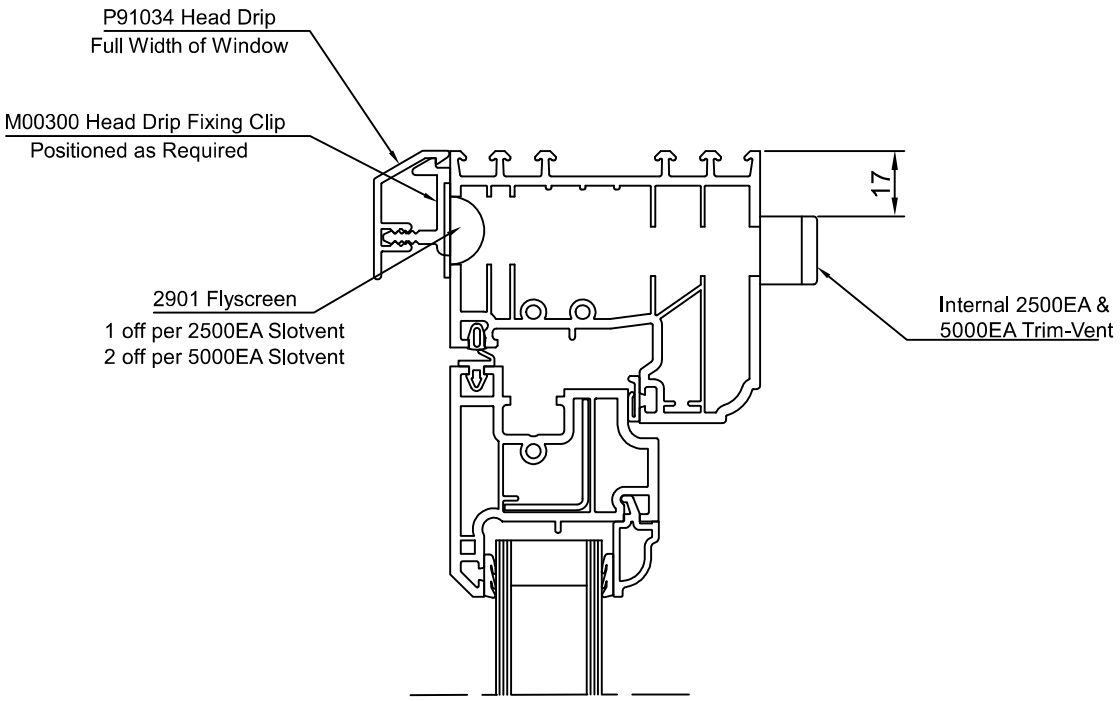

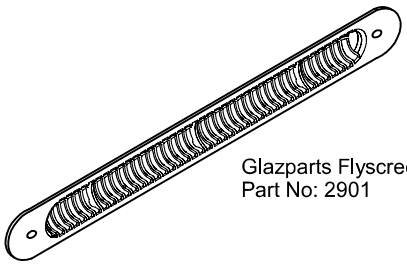

Glazparts Flyscreen
Part No: 2901

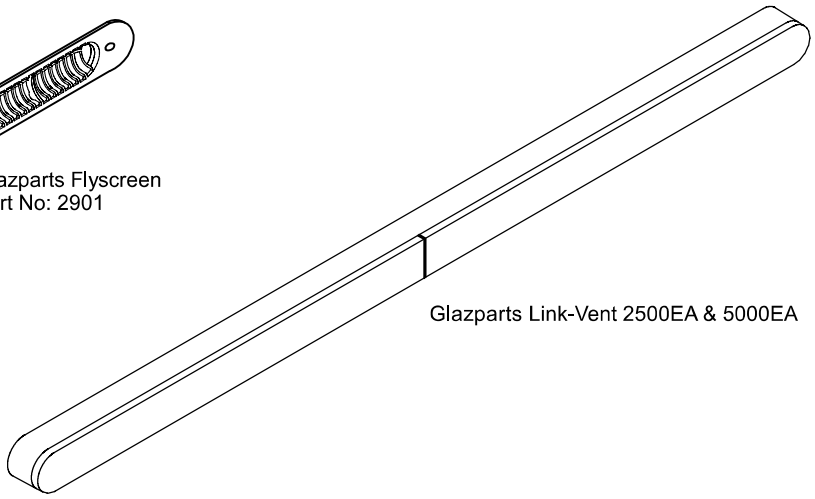

Glazparts Link-Vent 2500EA & 5000EA

FLUSH CROSS SECTION - FLYING MULLION

Section A

P10533

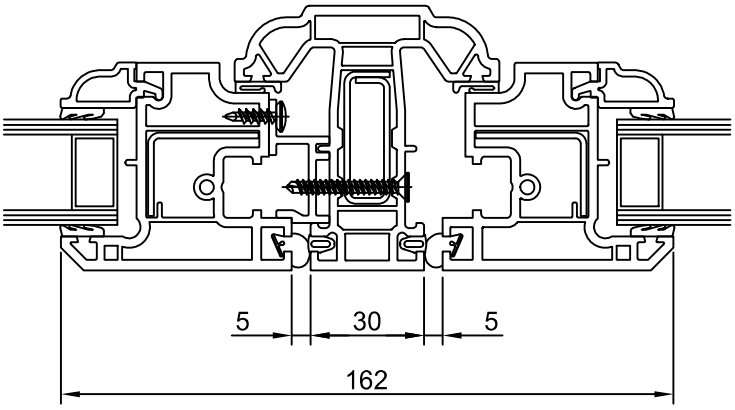

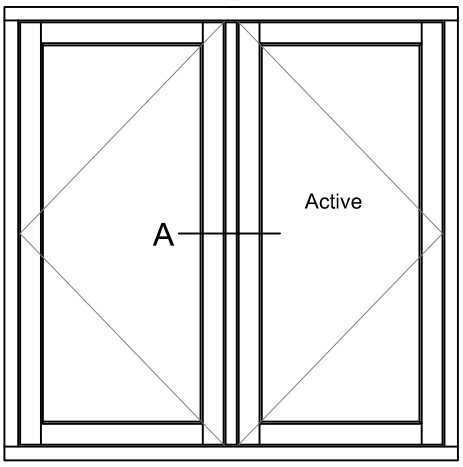

ASTRAGAL BAR END PREPS

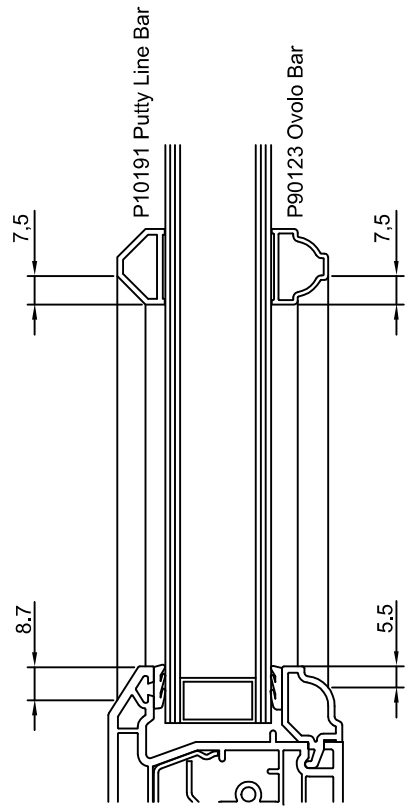

Storm Sash

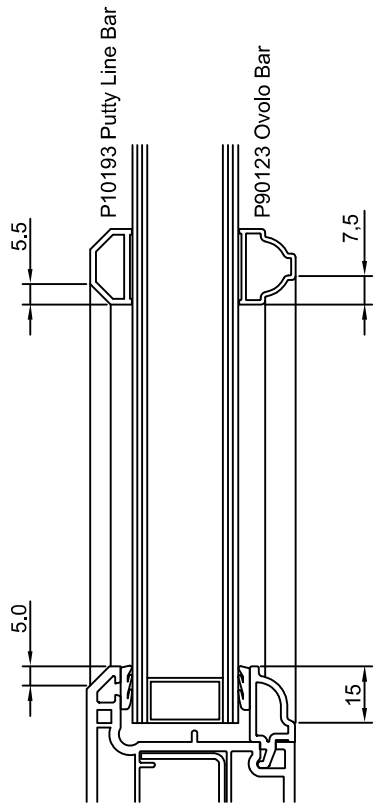

Flush Sash

Due to the way our milling machines are calibrated, it is impossible to be accurate when calculating the cutting length of an astragal bar when we have been provided with an end point to end point measurement.

Our saws and milling machines are calibrated to work from shoulder to shoulder measurements (see page 05.02 of the Evolution Technical Manual), and it is only when provided with these measurements, we can be confident that the bars will fit.

Also, when fitting astragal bars on site, there are occaisions when the duplex bars within a sealed unit may not be exactly in the correct position (our suppliers work to a 2mm tolerance) or the sealed unit may not have been glazed within its rebate with an equal spacing all round. This can cause the theoretical length of the bars to be incorrect and not line up with the duplex bars within the sealed unit. This is why we prefer to glaze sashes in our factory.

CILL PROFILES

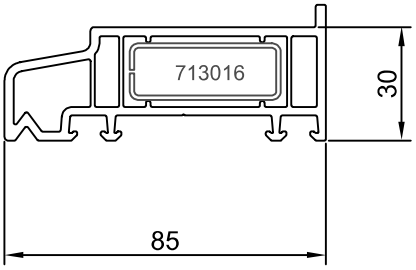

110122 Storm 1 & 2 85mm Cill

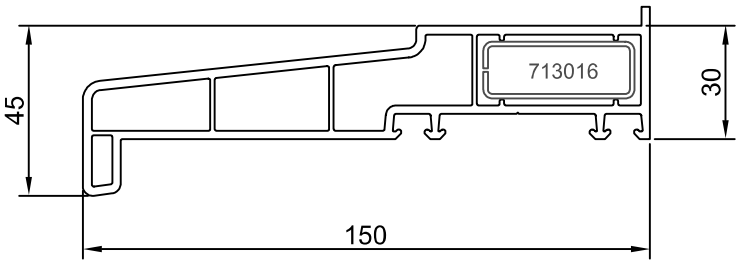

110103 Storm 1 & 2 150mm Cill

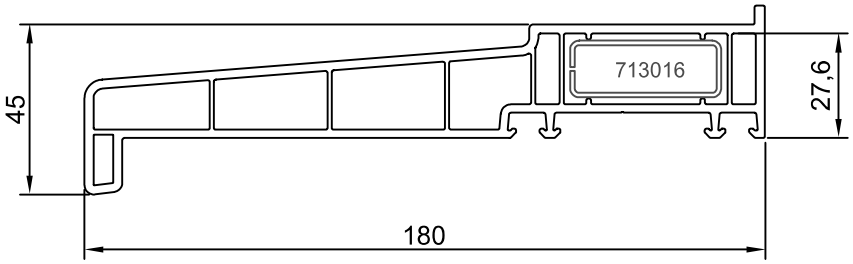

110123 Storm 1 & 2 180mm Cill
Available early 2021

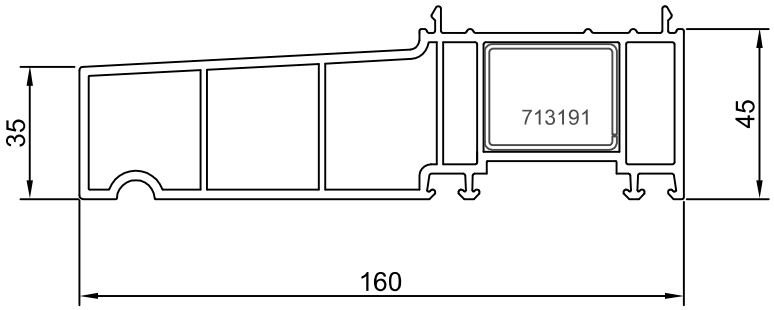

P90120 Storm 2 160mm Cill

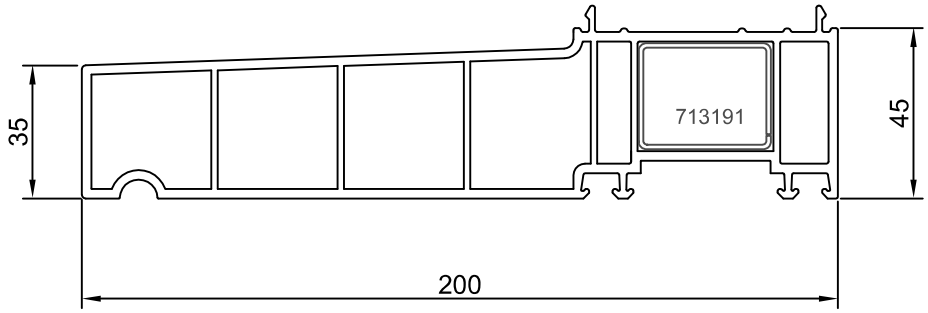

P90144 Storm 2 200mm Cill

STORM 1 CILLS WITH 70mm OUTER FRAMES

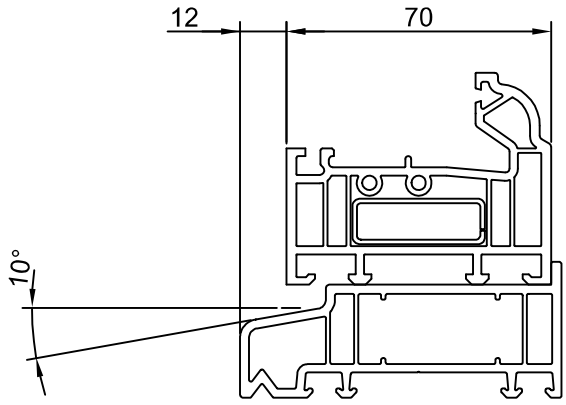

P10531 Storm 1 56mm Outer frame
110122 Storm 1 & 2 85mm x 30mm Cill

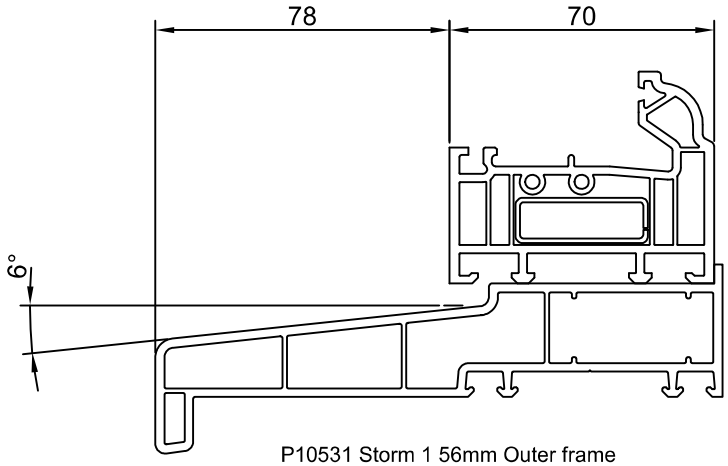

P10531 Storm 1 56mm Outer frame
110103 Storm 1 & 2 150mm x 30mm Cill

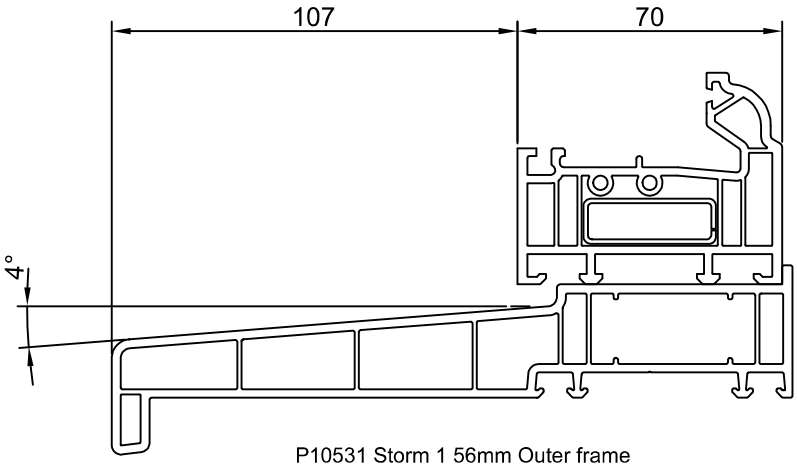

P10531 Storm 1 56mm Outer frame
110123 Storm 1 & 2 180mm x 30mm Cill