Bygone Harmony 2014 Cross Sections
(Inc Slim Meeting Rail & Butt Joints)

Verticle Cross Sections

With DBR

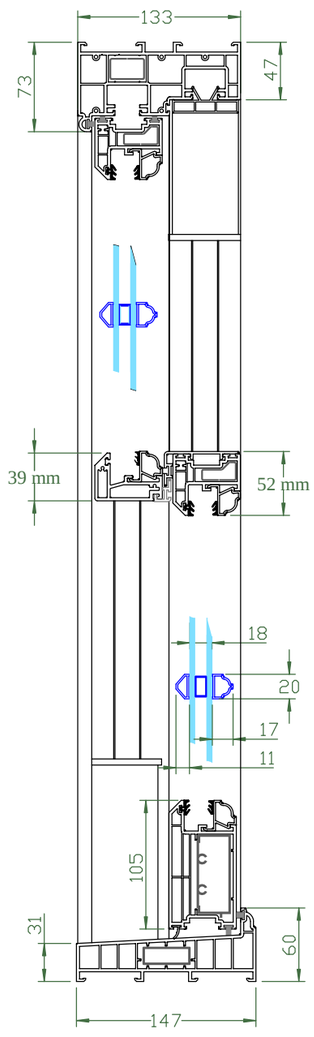

Without DBR

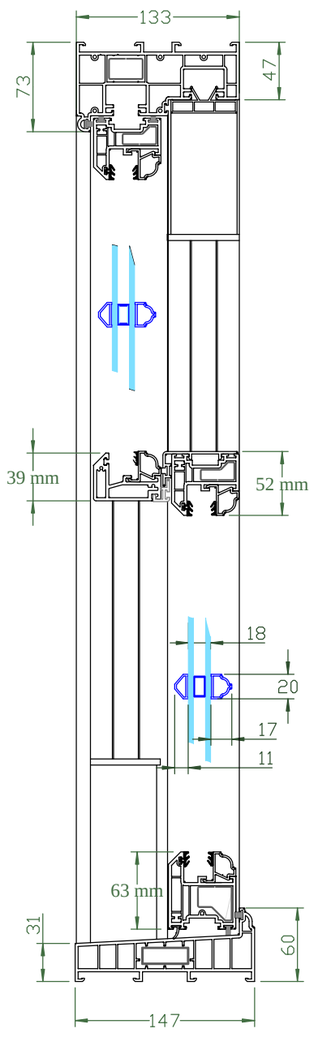

Horizontal Cross Sections

Bottom Sash



Top Sash

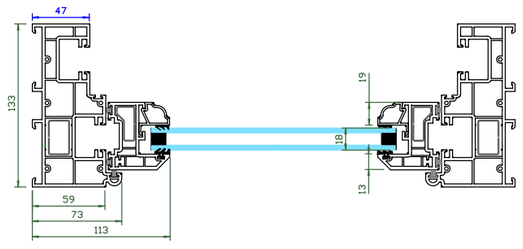

masterframe
4 Crittall Road
Witham
Essex
CM8 3DR
01376 510410
www.masterframe.co.uk

Registered in England: 2272659

Copyright Notice

The contents of this drawing are the copyright and Intellectural Property of Masterframe Windows Ltd. The detail of the drawing may be confidentual information. Dissemenation and reproduction is not allowed without proir express permision of Masterframe Windows Ltd.

Title:	Bygone Harmony 2014
Original Drawing date:	11 - 06 - 2014
Drawn By:	R Rabett

Revision History

REV	Ammendment	BY	Date

DO NOT SCALE: Dimensions in mm.

DWG Reference: ....