aspect ecology APEM Group

Land at New Place Farm, Pulborough, West Sussex

Construction Environmental Management Plan: Biodiversity (CEMP Biodiversity)

(to address the requirements of Condition 4 of Planning Permission DC/21/2321)

September 2026

Quality Management	
Client:	Barratt David Wilson Southern Counties
Project:	Land at New Place Farm, Pulborough, West Sussex
Report Title:	Construction Environmental Management Plan: Biodiversity (CEMP: Biodiversity)
Project Number:	1004404
File Reference:	1004404 CEMP KD/ JB/ JM dv4
Date:	17/09/2026

Copyright

The copyright of this document remains with Aspect Ecology. All rights reserved. The contents of this document therefore must not be copied or reproduced in whole or in part for any purpose without the written consent of Aspect Ecology.

Confidentiality

This report may contain sensitive information relating to protected species. The information contained herein should not be disseminated without the prior consent of Aspect Ecology. All records of Badger setts must remain confidential. Where this report is circulated publicly or uploaded to online planning portals, reference to Badger setts must be redacted and any maps pertaining to the locations of Badger setts removed from the document.

Legal Guidance

The information set out within this report in no way constitutes a legal opinion on the relevant legislation (refer to the relevant Appendix for the main provisions of the legislation). The opinion of a legal professional should be sought if further advice is required.

Liability

This report has been prepared for the exclusive use of the commissioning client and unless otherwise agreed in writing by Aspect Ecology no other party may use, or rely on the contents of the report. No liability is accepted by Aspect Ecology for any use of this report, other than for the purposes for which it was originally prepared and provided. No warranty, express or implied, is made as to the advice in this report. The content of this report is partly based on information provided by third parties. Unless otherwise stated, information obtained from any third party has not been independently verified by Aspect Ecology.

Contact Details

Aspect Ecology Ltd
Hardwick Business Park | Noral Way | Banbury | Oxfordshire OX16 2AF
t 01295 279721 e info@aspect-ecology.com
w www.aspect-ecology.com

Contents

Text:

1 Introduction 1

2 Roles and Responsibilities 3

3 Risk Assessment of Potentially Damaging Construction Activities 4

4 Ecological Protection Measures and Biodiversity Protection Zones 1

5 Schedule of Works 10

6 Conclusions 12

Plans:

Plan 4404/CEMP1 Site Location

Plan 4404/CEMP2 Biodiversity Protection Zone and Ecological Protection Measures

Appendices:

Appendix 4404/1 Legislation Summary

Appendix 4404/2 Arboricultural Impact Assessment & Method Statement

Appendix 4404/3 Reptile Toolbox Talk

Appendix 4404/4 Nesting Bird Toolbox Talk

1 Introduction

1.1 Background & Proposals

1.1.1 Aspect Ecology was commissioned by Barratt David Wilson Homes (Southern Counties) to produce a Construction Environmental Management Plan: Biodiversity (CEMP Biodiversity) in respect of Planning Condition 4 of proposed works at Land at New Place Farm, Pulborough, West Sussex (centred at grid reference TQ 05800 19154) hereafter referred to as 'The site'.

1.1.2 Outline planning permission was granted (Ref: DC/21/2321) on 7 July 2023 (with all matters reserved except for means of access from Glebelands) for the demolition of existing structures and the redevelopment of the site with a residential development scheme of up to 170 dwellings, a countryside park, associated earthworks and infrastructure.

1.1.3 Condition 4 states:

"No development shall commence until a construction environmental management plan (CEMP: Biodiversity) has been submitted to and approved in writing by the local planning authority. The CEMP (Biodiversity) shall include the following;

a) Risk assessment of potentially damaging construction activities.

b) Identification of "biodiversity protection zones".

c) Practical measures (both physical measures and sensitive working practices) to avoid or reduce impacts during construction (may be provided as a set of method statements).

d) The location and timing of sensitive works to avoid harm to biodiversity features.

e) The times during construction when specialist ecologists need to be present on site to oversee works.

f) Responsible persons and lines of communication.

g) The role and responsibilities on site of an ecological clerk of works (ECoW) or similarly competent person.

h) Use of protective fences, exclusion barriers and warning signs.

The approved CEMP shall be adhered to and implemented throughout the construction period strictly in accordance with the approved details, unless otherwise agreed in writing by the local planning authority.

Reason: To conserve protected and Priority species and allow the LPA to discharge its duties under the Conservation of Habitats and Species Regulations 2017 (as amended),the Wildlife & Countryside Act 1981 (as amended) and s40 of the NERC Act 2006 (Priority habitats & species)."

1.2 Purpose of this Report

1.2.1 This report has been informed by the Ecological Appraisal[1], which included the results of a desktop study, Phase 1 habitat survey as well as specific surveys conducted with

[1] *Land at New Place Farm, Pulborough: Ecological Appraisal* (2021) Aspect Ecology

respect of bats, Badger, Dormouse, reptiles, and Great Crested Newt. In addition, an update survey was conducted in 2026 to confirm the current status of habitats on site.

1.2.2 The purpose of this report is to address the requirements of Condition 4 of the outline planning permission, including protection and mitigation strategies in respect of retained habitats and notable or protected fauna, with associated responsibilities set out in order to fully safeguard these habitats and species during site clearance, ground works and the construction phase of the development, with reference to the previously submitted information and specific requirements set out in the planning condition where appropriate.

2 Roles and Responsibilities

2.1 Responsible Persons

2.1.1 Prior to the commencement of works, in order to ensure compliance with any method statements and to sufficiently mitigate against potential effects on protected species and/or habitats, the Site Manager will take responsibility or appoint a person to be responsible for ensuring the following:

- Compliance with any legal consents/licences relating to nature conservation;
- Compliance with any planning conditions relating to nature conservation;
- Installation of physical protection measures during development works;
- Implementation of sensitive working practices during development works;
- Ensure ecological protection measures are implemented on site through direct liaison with the Project Manager and the Ecological Clerk of Works;
- Regular inspection and maintenance of physical protection measures and monitoring of working practices during development works; and
- Provision of training and information about the importance of the 'Biodiversity Protection Zones' to all personnel on site.
- Supervise and co-ordinate the site workforce, including subcontractors, material suppliers and utility providers as necessary to ensure compliance with ecological protection measures; and
- Report any ecological issues encountered during the construction process to the Project Manager and the Ecological Clerk of Works.

2.2 Ecological Clerk of Works (ECoW)

2.2.1 The Ecological Clerk of Works (ECoW) will oversee implementation of ecological and arboricultural safeguards and mitigation measures throughout the construction period. All contractors and sub-contractors on site will be made aware of relevant matters during the site inductions, with a 'sign in' sheet required to be completed to agree their understanding of the specific site requirements, with appropriate signage also installed on all biodiversity and arboricultural protection zone fencing.

2.2.2 The Ecological Clerk of Works will be responsible for ensuring the following:

- Pre-construction checks with regards to habitats and species;
- Production and delivery of inductions, toolbox talks and communications to contractors as necessary;
- Act as a main point of contact between the regulatory authorities and developer on ecological issues;
- Provision of ecological supervision, as required;

3 Risk Assessment of Potentially Damaging Construction Activities

3.1 Overview of Ecological Features

3.1.1 Ecological survey work undertaken at the site has identified the potential presence of a number of ecological features that might be affected during construction, including;

- Retained Trees and Hedgerows;
- Bats;
- Badger/Other Mammals;
- Amphibians (Precautionary Measures);
- Reptiles; and
- Nesting birds.

3.2 Potentially Damaging Construction Activities

3.2.1 The consented development works will require a range of construction activities which, in the absence of appropriate safeguarding measures, have the potential to be ecologically damaging. Such potentially damaging activities include:

- Vegetation clearance works;
- Site levelling works; and
- Ongoing construction activities (including excavation and storage of materials).

3.2.2 As such, protection measures are to be implemented to fully safeguard these habitats and species / groups.

3.2.3 Prior to works commencing and throughout the duration of works, ecological features of note will be appropriately safeguarded, as set out in Section 4 below. The approach for the implementation of these measures will be flexible and responsive to progress and conditions on site during the works. The protection measures will be incorporated into construction risk registers and, as such, will be implemented as appropriate when particular activities are carried out. The Ecological Clerk of Works will be kept informed of progress during construction and will provide advice or make recommendations for additional protection measures, if required.

3.2.4 Implementation of the measures contained within this document will safeguard ecological features at and around the site prior to and during construction.

4 Ecological Protection Measures and Biodiversity Protection Zones

4.1 Overview

4.1.1 Provided below are details of the site-specific biodiversity safeguards required during site preparation and construction with respect to relevant habitats and species (as shown on 4404/CEMP2).

4.2 Habitats

Retained Trees and Hedgerows

4.2.1 The retained on site trees and hedgerow will be protected throughout the construction period by protective fencing. The protection fencing shall be erected prior to construction activities commencing, in accordance with arboricultural advice and the Arboricultural Impact Assessment and Method Statement[2]. The protection fencing will be to the standard stipulated under the arboricultural best practice guidance British Standard 5837:2012.

4.2.2 The Site Manager/responsible persons will be responsible for inspecting the protective fencing on a daily basis. If required, a checklist will be produced for the purposes of the inspections and records kept of remedial actions that have been taken to ensure fencing remains in place and functional to safeguard trees/hedgerows.

4.2.3 In instances where it is necessary for specific works to be undertaken within the construction exclusion zones, such as the landscaping works, erection of scaffolding, installation of services and other relevant ancillary operations, these activities will be undertaken following the submission of method statements to be prior approved by the arboricultural consultant. Each method statement will include an agreed method of works, extent of direct supervision by the arboricultural consultant, and frequency of site visits to be made for the duration of the works.

4.3 Fauna

4.3.1 The habitats within the site offer limited opportunities for a small number of protected species. Accordingly, a number of protection measures will be implemented to safeguard any protected species should they be present on-site at the time of works.

Bats

4.3.2 All British bats are classed as European Protected Species under the Conservation of Habitats and Species Regulations 2017 (as amended) and are also listed under Schedule 5 of the Wildlife and Countryside Act 1981 (as amended). As such, both bats and their roosts (breeding sites and resting places) receive full protection under the legislation. If proposed development work is likely to result in an offence a license may need to be obtained from Natural England which would be subject to appropriate measures to safeguard bats. Given all bats are protected species, they are considered to represent important ecological features. A number of bat species are also S41 Priority Species.

[2] Arboricultural Impact Assessment & Method Statement, Aspect Arboriculture (January 2026)

Safeguards with respect to potential roosting bats (trees)

4.3.1 A number of trees identified to have the potential to support roosting bats during initial survey work and the update Ground Level Tree Assessment in spring 2026 are scheduled for removal/pollarding (Plan 4404/CEMP2), with all these trees located within a central tree line.

4.3.2 Where trees are to be removed/pollarded, these will be subject to update ground level tree inspections, in order to assess if trees support Potential Roosting Features for Individual bats (PRF-Is), or assess if trees support Potential Roosting Features for Multiple bats (PRF-Ms).

4.3.3 Works to trees identified as PRF-I will only be undertaken following a single climbed inspection. Following this climbed inspection survey, if the absence of bats is confirmed, then felling of the tree can proceed immediately on the same day as the inspection. If this is not possible on the same day, any potential roosting features will need to be subject to another climbed inspected survey immediately prior to felling.

4.3.4 For trees identified as PRF-M, three climbed inspection surveys will be undertaken between May and September, with at least two surveys undertaken between May and August, and spaced at least three weeks apart. If the absence of bats is confirmed, then felling of the tree can proceed immediately on the same day as the final inspection. If this is not possible on the same day, any potential roosting features will need to be subject to another climbed inspected survey immediately prior to felling.

4.3.5 Trees will be felled using the 'soft-felling' technique, whereby sections of the tree will be cut and lowered to the ground, followed by leaving the felled sections on the ground for a period of at least 24 hours to allow any bats, should these be present, to escape.

4.3.6 If any evidence for the presence of roosting bats is recorded during the inspection surveys discussed above, works will need to be carried out under a European Protected Species (EPS) development licence, and a licence application will be made to Natural England as required.

4.3.7 Construction staff will be briefed as to their responsibilities with respect to bats, and actions that should be taken in the event of their occurrence during construction works.

Lighting

4.3.8 No construction lighting will be located within the biodiversity protection zones or directed onto the retained trees. Permanent construction lighting will only be in operation during construction hours. Consideration should be given to the type of luminaires used, in particular luminaries should lack UV elements and metal halide and fluorescent sources should be avoided in preference for LED luminaries. A warm white spectrum (ideally <2,700K) should be adopted to reduce the blue light component.

[redacted]

[redacted]

[redacted].

[redacted].

[redacted]

General Construction Safeguards

- Any trenches or excavations within the site that are to be left open overnight will be provided with a means of escape should a Badger enter. This could simply be in the form of a gently graded ramp or roughened plank of wood placed in the trench as a ramp to the surface. This is particularly important if the trench fills with water;
- Any temporarily exposed open pipes (>150mm outside diameter) should be blanked off at the end of each working day so as to prevent Badgers gaining access as may happen when contractors are off-site;
- Any trenches/pits will be inspected each morning to ensure no Badgers have become trapped overnight. Should a Badger become trapped in a trench it will likely attempt to dig itself into the side of the trench, forming a temporary sett. Should a trapped Badger be encountered a suitably qualified ecologist will be contacted immediately for further advice;
- The storage of topsoil or other 'soft' building materials in the site will be given careful consideration. Badgers will readily adopt such mounds as setts. So as to avoid the adoption of any mounds, these will be kept to a minimum and any essential mounds subject to daily inspections with consideration given to temporarily fencing any such mounds to exclude Badgers;
- The storage of any chemicals at the site will be contained in such a way that they cannot be accessed or knocked over by any roaming Badgers;
- Fires will only be lit in secure compounds away from areas of Badger activity and not allowed to remain lit during the night;
- Unsecured food and litter will not be left within the working area overnight; and
- An update survey of the site will be undertaken prior to commencement of site works in order to confirm the continued absence of Badger or highlight the need for further safeguards or licensing.

<u>Other Small Mammals</u>

4.3.12 A number of other UK mammal species do not receive direct legislative protection relevant to development activities but may receive protection against acts of cruelty (e.g. under the Wild Mammals (Protection) Act 1996). In addition, a number of these mammal species are S41 Priority Species and should be assessed as important ecological features.

4.3.13 Two mammal entrances (non Badger), labelled M1 and M2 were recorded at the site boundaries. These entrances receive no specific legislative protection, and will in any case be unaffected directly by the permitted construction activities.

4.3.14 In order to safeguard Hedgehogs and other small mammals should they enter the site during construction works, the following measures will be implemented:

- A watching brief should be maintained for Hedgehog and other small mammals throughout any clearance works;
- Any piles of material already present on site, particularly vegetation/leaves, etc. and any areas of dense scrub or hedgerows, shall be dismantled/removed by hand and checked for Hedgehog prior to the use of any machinery/disposal;
- Any material to be disposed of by burning, particularly waste from vegetation clearance and tree works, should not be left piled on site for more than 24 hours in order to minimise the risk of Hedgehogs occupying the pile. If this cannot be avoided, material should be stored within a container such as a skip to prevent animals from gaining access. Any material which has been stored on the ground overnight should be moved prior to burning to allow a thorough check for any animals which may have been occupying the pile; and
- In the event that an injured Hedgehog is found, the animal should be wrapped carefully in a towel, the British Hedgehog Preservation Society (BHPS) phoned (01584 890 801) and the Hedgehog taken to a local vet immediately.

Reptiles

4.3.15 All reptile species receive protection under legislation in the UK. Due to their relatively common and widespread status, Slow-worm *Anguis fragilis*, Grass Snake *Natrix natrix*, Common Lizard *Lacerta vivipara* and Adder *Vipera berus* receive only partial protection under the Wildlife and Countryside Act 1981 (as amended) being protected from deliberate killing or injury, their habitat receiving no statutory protection (see Appendix 4404/1 for detailed provisions). These species are also listed as UK Priority Species.

4.3.16 Suitable reptile habitat was identified within the site and, as such, specific reptile presence/absence survey work was undertaken at the site, which informed the planning application. A population of Slow Worm *Anguis fragilis* (peak count of nine) was recorded, with animals being fairly evenly distributed throughout grassland fields. This relates to a moderate or 'good' population under standard guidance[4]. Small numbers of Grass Snake were also recorded throughout these areas, representing a low population.

4.3.17 The areas of suitable reptile habitat are largely located within areas of open space under the proposals, although particularly areas in the south are to be impacted by vegetation clearance and groundworks to facilitate the development. Accordingly, safeguarding measures to protect reptile species during construction from affected areas have been implemented in the form of a 30-day reptile translocation exercise.

4.3.18 Select areas within the northern part of the site, associated with the Countryside Park, are to be retained and enhanced to provide suitable habitat for reptiles and therefore currently act as a long-term receptor site.

Reptile Translocation Exercise

4.3.19 Given that suitable reptile habitat is to be affected by development works, it was necessary for a translocation exercise to be carried out to relocate individual reptiles

[4] Herpetofauna Groups of Britain and Ireland (1998) 'Evaluating local mitigation/translocation programmes: Maintaining Best Practice and lawful standards'

from affected areas. A summary of the reptile mitigation strategy, together with timings is shown below In Table 4.1, below.

Table 4.1. Summary of Reptile Mitigation Activities

Action	Location	Timing	Notes
Erection of temporary reptile fencing, and associated warning signs.	In accordance with the prepared reptile fencing plan (detailed on Plan 4404/CEMP2). Additional temporary reptile fencing within the site creating separate parcels of land.	Prior to commencement of all construction works.	Carried out under ecological supervision. Perimeter fencing to remain in place throughout construction.
Creation of long-sward grassland and confirmation of reptile receptor site.	Northeastern parcel of the site (detailed on Plan 4404/CEMP2).	Prior to commencement of all construction works.	Carrying capacity of the receptor site was confirmed and considered suitable to receive low numbers of Slow-worm and Grass Snake.
30-day translocation exercise	Throughout the site	A minimum of 30 days was deemed appropriate given the population of reptiles present within the site. Five clear days reached with no reptiles captured	Daily site visits conducted between 29/09/25 and 28/10/2025 under suitable weather conditions.
Destructive search of suitable reptile habitat	Habitat areas considered suitable for reptiles.	Following completion of the translocation exercise, carried out under suitable weather conditions.	Carried out under ecological supervision.
Removal of temporary reptile fencing	Conducted alongside destructive search within the site to allow construction activities to commence when required.	Following completion of the translocation exercise, carried out under suitable weather conditions.	Carried out under ecological supervision. Perimeter fencing to remain in place throughout construction.

4.3.20 The receptor area will be managed to ensure it remains suitable for reptiles, with a habitat mosaic created within the grassland. Arisings will be left in situ to encourage the development of a thatch at ground level. Cutting will be to a height of 15cm to ensure that reptiles are not harmed.

4.3.21 In addition, an area of approximately 20% of the total grassland within the receptor area area should remain uncut year-on-year with a proportion of self-sown scrub and tall ruderal herbs encouraged to develop around the margins of the receptor site.

4.3.22 Contractors involved with the management of grassland will be provided with the reptile toolbox talk to ensure that reptiles are safeguarded.

4.3.23 Regular checks of the integrity of the reptile fencing will be carried out by a member of the Construction Team during the construction phase. Where possible these checks will be incorporated into the site's routine inspection checklist.

Amphibians (including Great Crested Newts)

4.3.24 All British amphibian species receive a degree of protection under the Wildlife and Countryside Act 1981 (as amended). Great Crested Newt is protected under the Act and is also classed as a European Protected Species under the Conservation of Habitats and Species Regulations 2017 (as amended). As such, both Great Crested Newt and habitats utilised by this species are afforded protection (see Appendix 4404/1 for detailed provisions). Great Crested Newt is also a S41 Priority Species, as are Common Toad *Bufo bufo*, Natterjack Toad *Epidalea calamita*, and Pool Frog *Pelophylax lessonae*. As such, these species should be assessed as important ecological features.

4.3.25 A single pond, P2, is present within the site, whilst pond P1 is located within 250m of the site. A number of waterbodies have been identified between 250m and 500m from the site boundary, although these are well separated from the site, with the next nearest pond located over 400m to the north of the site on the opposite side of the railway.

4.3.26 Due to the potential suitability of ponds P1 and P2 to support Great Crested Newt, eDNA surveys were undertaken in 2021 and 2024 to determine the presence/absence of this species. The results confirmed absence of this species from both waterbodies.

4.3.27 Due to the age of the survey data and some limited suitable habitats within the site, a Precautionary Working Method Statement[5] is to be implemented during construction activities at the site to minimise the risk to Great Crested Newt and other amphibian species.

Nesting Birds

4.3.28 All wild birds and their nests receive protection under Section 1 of the Wildlife and Countryside Act 1981 (as amended) in respect of killing and injury, and their nests, whilst being built or in use, cannot be taken, damaged or destroyed. Species included on Schedule 1 of the Act receive greater protection and are subject to special penalties.

4.3.29 No clearance of suitable (woody) vegetation should therefore be undertaken during the bird-nesting season (**1st March to 31st August inclusive**). Vegetation clearance activities include any removals of trees and/or hedgerows. If this is not practicable, any potential nesting habitat to be removed should first be checked by the ECoW in order to determine the location of any active nests. Any active nests identified would then need to be cordoned off (minimum 5m buffer) and protected until the end of the nesting season or until the birds have fledged. These checking surveys would need to be carried out no more than three days in advance of vegetation clearance works.

4.3.30 A specific methodology for nesting bird safeguards is set out at Appendix 4404/4.

[5] Precautionary Working Method Statement (PWMS) to address stated requirements of Condition 6 of Reserved Matters planning permission DC/24/1676, Aspect Ecology (August 2026)

4.4 General Procedures and Measures

4.4.1 Provided below are more general measures relevant to overall ecological protection.

Access and Movement

4.4.2 The site will be accessed at designated access and egress points. These will be sited outside of any tree protection fencing and will minimise crossing areas of land which are not subject to the development proposals in order to avoid soil compaction and damage to retained vegetation.

Air Quality (dust prevention measures)

4.4.3 In order to safeguard the retained trees, hedgerows, woodland and watercourse, dust control and abatement measures will be implemented during construction:

- Machinery, fuel and chemical storage and dust generating activities should not be located close to retained trees, hedgerows, woodland and watercourse;
- Should this not be possible then retained habitats should be protected by the use of dust barriers / screens where practicable;
- Surfaces and dusty activities will be damped down as required by the use of agreed wet cleaning methods or mechanical road sweepers during periods of dry weather;
- All relevant loads entering and leaving the site should be covered; and
- Stockpiles of materials should exist for the shortest possible period of time and be kept away from retained habitats.

Environmental Incidents and Accidents

4.4.4 A plan of action for all environmental incidences and emergencies will be prepared for the construction works, including procedures, contact numbers and a chain of command. Site staff will be made aware of the procedures as part of the induction process and again with 'toolbox talks' as necessary before starting a new phase of work or process. Specific pollution prevention kits will be maintained on site, with site staff trained in how to operate such equipment.

4.4.5 All incidences and emergencies will be recorded. This information will be used to improve future environmental protection measures. In the event of an ecological incident or emergency Aspect Ecology should be contacted for further advice.

Training

4.4.6 Site staff will be given inductions before being allowed to work at the site. The inductions will include relevant environmental information such as the occurrence of and protection requirements for the ecological features listed in Section 3 above.

4.4.7 If a suitably qualified ecologist is required on-site to supervise any ecologically sensitive works, the ecologist may choose to provide their own specific 'toolbox talk' prior to the commencement of the works.

4.4.8 The roles and responsibilities as detailed in Section 2 of this CEMP will ensure that the above environmental control measures are implemented and adhered to.

5 Schedule of Works

5.1 Timing of Works

5.1.1 A schedule of works has been produced, as detailed below, detailing the location and timing of sensitive works, the works that require a specialist ecologist present and the responsible persons.

Activity	Frequency/Timings	Responsibility	ECoW Required?	Notes
Protection of retained trees and hedgerows	Tree Protection Fencing in place prior to construction commencing and ongoing throughout construction	BDW Homes Southern Counties/Site Manager	Presence not required	All trees and hedgerows to be retained and shall be protected in line with standard arboriculturist best practice (BS5837:2012).
Bat safeguards	Surveys of central tree line prior to felling/pollarding. Surveys May – September.	BDW Homes Southern Counties/Site Manager	Pre works surveys to be completed by a suitably qualified ecologist. Soft felling may need to be supervised pending results.	Where trees require 3 surveys, 2 of these must be untaken between May and August, each spread out by 3 weeks.
Badger safeguards	Continual	BDW Homes Southern Counties/Site Manager	No - good practice on site should prevent any Badgers becoming trapped or creating setts.	-
Nesting Bird checks to be carried out prior to any clearance works of suitable nesting bird habitat	The nesting bird season extends between **March – August inclusive.** Only required if vegetation clearance is carried out during the nesting season	BDW Homes Southern Counties / Appointed Contractor inform Aspect Ecology when checks are required.	Required if clearance of trees/hedgerows within the nesting season.	Ecologist to carry out checking survey no more than three days before any removal of suitable vegetation commences.
Checks of reptile exclusion fencing	Weekly	BDW Homes Southern Counties	Only where repairs required	-
Disposing of vegetation piles	Ongoing throughout construction	BDW Homes Southern Counties/ Site Manager	Presence not required	Vegetation piles to not be left longer than 24 hours to ensure that hedgehogs do not inhabit, or

Activity	Frequency/Timings	Responsibility	ECoW Required?	Notes
				that birds do not nest in them.
General Procedures and Measures	Ongoing throughout construction	Site Manager	Presence not required	

5.2 Use of Protective Fences, Exclusion Barriers and Warning Signs

Fences will be used as follows:

- Root protection zones of important trees/hedgerow will be identified by fencing as appropriate and specified in the Arboricultural Impact Assessment and Method Statement.
- All fencing will be in accordance with the specification provided in British Standard BS5837:2012.

5.2.1 After this point, construction works adjacent to the landscape buffer, staff, plant and materials will be contained within identified construction areas and access routes and will not encroach beyond this boundary, which will be marked with a suitable demarcation fence.

5.2.2 Elsewhere (for example to protect the retained habitats), a suitable protective fence will be used (e.g Heras type fencing, secured firmly to the ground by means of staking etc.)

Reptile Exclusion Fencing

5.2.3 Reptile exclusion fencing has been erected at the site, along the northern and eastern boundaries. This is of a semi-permanent design, preventing reptiles climbing the fence and entering the development site.

5.2.4 The exclusion fencing will be maintained at the site boundary for the duration of the construction works to prevent reptiles re-entering the site. This will include maintenance of habitats either side of the fence through cutting or herbicide treatment to prevent tall vegetation developing which could assist reptiles in climbing the fence. Once construction works are complete, the fence will be removed, allowing for dispersal of reptiles into areas of open space within the completed development.

6 Conclusions

6.1 This report and accompanying plans set out details of the Construction Environmental Management Plan (CEMP: Biodiversity) to satisfy the stated requirements of Condition 4 of the planning consent for the site (Ref: DC/21/2321).

6.2 Measures detailed within the Construction Environmental Management Plan provide information on how the development works will be managed, so as to minimise the risk of harm to biodiversity and to comply with the relevant protected species legislation.

6.3 It is concluded that, subject to the implementation of the Construction Environmental Management Plan: Biodiversity, the biodiversity interests of the site and adjacent habitats will be safeguarded.

Plan 4404/CEMP1:

Site Location

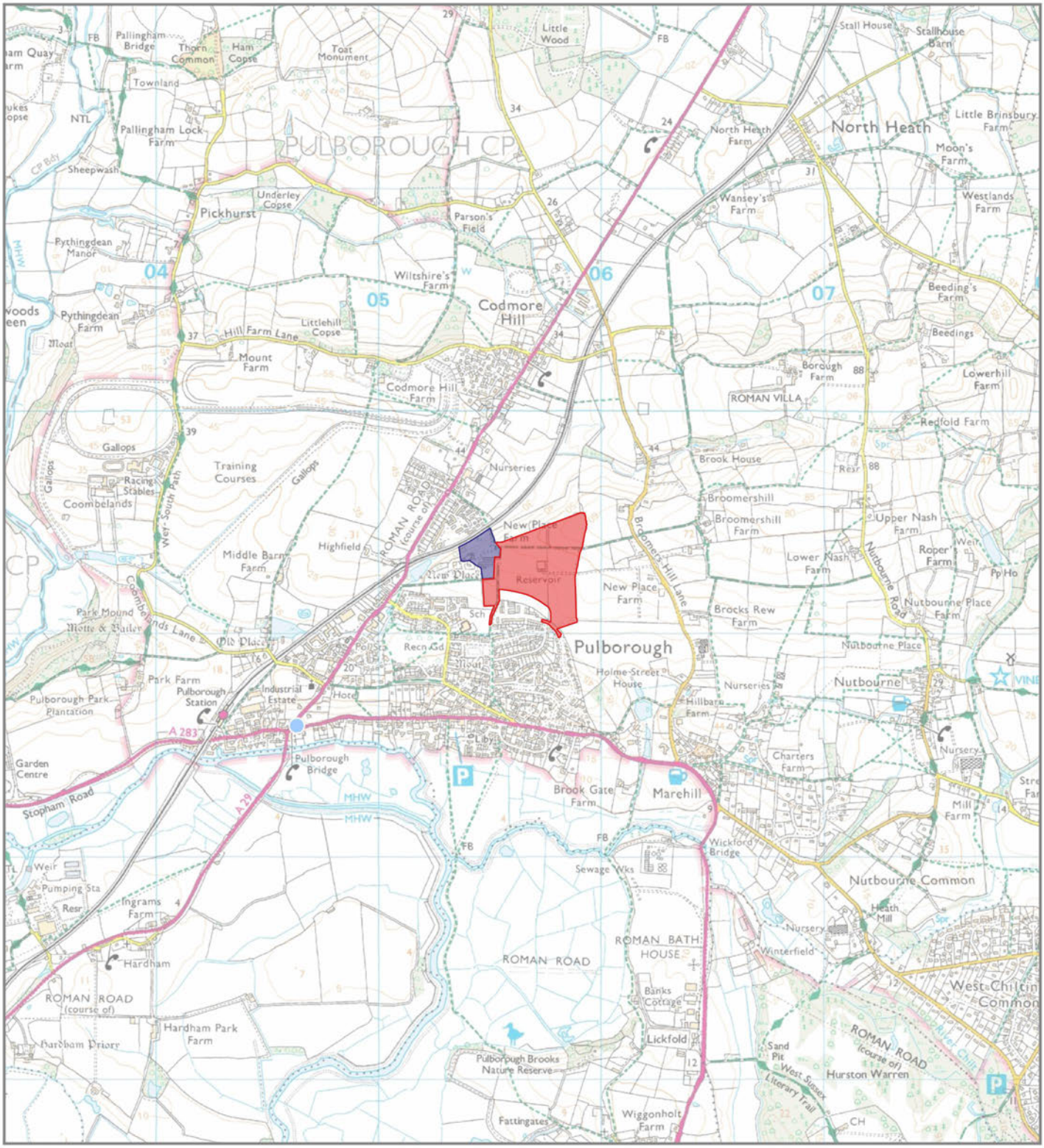

Key:

Site Location

Retained Land Outside of Application

aspect ecology
APEM Group

Aspect Ecology Limited · West Court · Hardwick Business Park
Noral Way · Banbury · Oxfordshire · OX16 2AF
01295 279721 · info@aspect ecology.com · www.aspect ecology.com

Land at New Place Farm, Pulborough	PROJECT
Site Location	TITLE
4404/CEMP1	DRAWING NO.
A/JP	REV
August 2026	DATE
JM/JP	QC

P:\Project\Aspect Ecology Projects\ECO 4400\ECO 4404\Graphics\2024 RM Application\QGIS\4404 Reptile Survey.qgs

Based upon the Ordnance Survey map with permission of the Controller of His Majesty's Stationery Office, © Crown Copyright. Aspect Ecology Ltd, West Court, Hardwick Business Park, Noral Way, Banbury, Oxfordshire, OX16 2AF. Licence No. 100045262

Plan 4404/CEMP2:

Biodiversity Protection Zone and Ecological Protection Measures

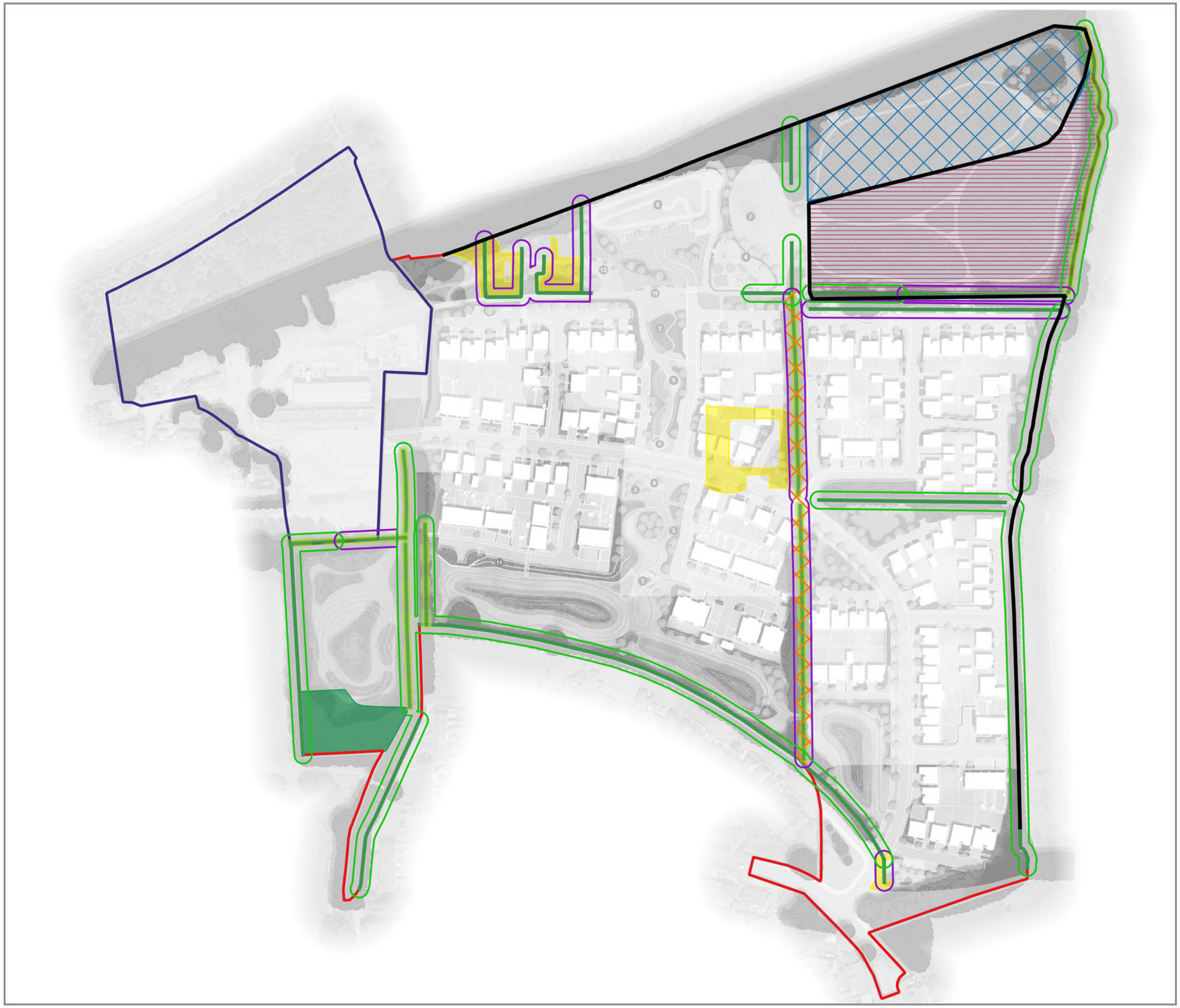

Key:

- Site Boundary
- Retained land outside of application
- Habitats to be cleared under ecological supervsion
- Habitats to be retained
- Linear habitats to be cleared under ecological supervision
- Tree line subject to bat inspection surveys prior to removal
- Retained hedgerows and treelines, subject to suitable proection measures
- Reptile receptor area
- Utilised following completion of construction as suitable reptile habitat
- Reptile Fencing

aspect ecology
APEM Group

Aspect Ecology Limited - West Court - Hardwick Business Park
Noral Way - Banbury - Oxfordshire - OX16 2AF
01295 279721 - info@aspect-ecology.com - www.aspect-ecology.com

Land at New Place Farm, Pulborough	PROJECT
Construction Environmental Management Plan	TITLE
4404/CEMP2	DRAWING NO.
D/LS	REV
September 2026	DATE
JB/LS	QC

P:\Project\Aspect Ecology Projects\ECO 4400\ECO 4404\Graphics\2024 RM Application\QGIS\4404 Reptile Survey.qgs

Based upon the Ordnance Survey map with permission of the Controller of His Majesty's Stationery Office, © Crown Copyright. Aspect Ecology Ltd, West Court, Hardwick Business Park, Noral Way, Banbury, Oxfordshire, OX16 2AF. Licence No. 100045262

Appendix 4404/1:

Legislation Summary

LEGISLATION SUMMARY

1. In England and Wales primary legislation is made by the UK Parliament, and in Scotland by the Scottish Parliament, in the form of Acts. The main piece of legislation relating to nature conservation in the UK is the Wildlife and Countryside Act 1981 (as amended).

2. Acts of Parliament confer powers on Ministers to make more detailed orders, rules or regulations by means of secondary legislation in the form of statutory instruments. Statutory instruments are used to provide the necessary detail that would be too complex to include in an Act itself[1]. The provisions of an Act of Parliament can also be enforced, amended or updated by secondary legislation.

3. In summary, the key pieces of legislation relating to nature conservation in the UK are:

    - Wildlife and Countryside Act 1981 (as amended)
    - Protection of Badgers Act 1992
    - Hedgerows Regulations 1997
    - Countryside and Rights of Way (CRoW) Act for England and Wales 2000
    - Natural Environment and Rural Communities Act 2006
    - Conservation of Habitats and Species Regulations 2017

4. A brief summary of the relevant legislation is provided below. The original Acts and instruments should be referred to for the full and most up to date text of the legislation.

5. **Wildlife and Countryside Act 1981 (as amended)**. The WCA Act provides for the notification and confirmation of Sites of Special Scientific Interest (SSSIs) identified for their flora, fauna, geological or physiographical features. The Act contains strict measures for the protection and management of SSSIs.

6. The Act also refers to the treatment of UK wildlife including protected species listed under Schedules 1 (birds), 5 (mammals, herpetofauna, fish, invertebrates) and 8 (plants).

7. Under Section 1(1) of the Act, all wild birds are protected such that is an offence to intentionally:

    - Kill, injure or take any wild bird;
    - Take, damage or destroy the nest of any wild bird whilst in use* or being built;
    - Take or destroy an egg of any wild bird.

    * The nests of birds that re-use their nests as listed under Schedule ZA1, e.g. Golden Eagle, are protected against taking, damage or destruction irrespective of whether they are in use or not.

8. Offences in respect of Schedule 1 birds are subject to special, i.e. higher, penalties. Schedule 1 birds also receive greater protection such that it is an offence to intentionally or recklessly:

    - Disturb any wild bird included in Schedule 1 while it is building a nest or while it is in, on or near a nest containing eggs or young;
    - Disturb dependent young of such a bird.

[1] http://www.parliament.uk/business/bills-and-legislation/secondary-legislation/statutory-instruments/

9. Under Section 9(1) of the Act, it is an offence to:

- Intentionally kill, injure or take any wild animal included in Schedule 5.

10. In addition, under Section 9(4) it is an offence to intentionally or recklessly:

- Obstruct access to, any structure or place which any wild animal included in Schedule 5 uses for shelter or protection; or
- Disturb any wild animal included in Schedule 5 while occupying a structure or place which it uses for that purpose.

11. Under Section 13(1) it is an offence:

- To intentionally pick, uproot or destroy any wild plant listed in Schedule 8; or
- Unless the authorised person, to intentionally uproot any wild plant not included in Schedule 8.

12. The Act also contains measures (S.14) for preventing the establishment of non-native species that may be detrimental to native wildlife, prohibiting the introduction into the wild of animals (releases or allows to escape) and plants (plants or causes to grow) listed under Schedule 9.

13. **Protection of Badgers Act 1992.** The Act aims to protect the species from persecution, rather than being a response to an unfavourable conservation status, as the species is in fact common over most of Britain. It should be noted that the legislation is not intended to prevent properly authorised development. Under the Act it is an offence to:

- Wilfully kill, injure, take, possess or cruelly ill-treat* a Badger, or attempt to do so;
- To intentionally or recklessly interfere with a sett# (this includes disturbing Badgers whilst they are occupying a sett, as well as damaging or destroying a sett or obstructing access to it).

* the intentional elimination of sufficient foraging area to support a known social group of Badgers may, in certain circumstances, be construed as an offence

\# A sett is defined as "*any structure or place which displays signs indicating current use by a Badger*". Natural England advice (June 2009) is that a sett is protected so long as such signs remain present, which in practice could potentially be for some time after the last actual occupation by Badger. Interference with a sett includes blocking tunnels or damaging the sett in any way

14. Licences can be obtained from the Statutory Nature Conservation Organisation (SNCO) for development activities that would otherwise be unlawful under the legislation, provided there is suitable justification. The SNCO for England is Natural England.

15. **Hedgerows Regulations 1997**. 'Important' hedgerows (as defined by the Regulations) are protected from removal (up-rooting or otherwise destroying). Various criteria specified in the Regulations are employed to identify 'important' hedgerows for wildlife, landscape or historical reasons.

16. **Countryside and Rights of Way (CRoW) Act for England and Wales 2000.** The CRoW Act provides increased measures for the management and protection of SSSIs and strengthens wildlife enforcement legislation. Schedule 12 of the Act amends the species provisions of the WCA 1981, strengthening the legal protection for threatened species. The Act also introduced a duty on Government to have regard to the conservation of biodiversity and maintain lists of species and habitats for which conservation steps should be taken or promoted, in accordance with the Convention on Biological Diversity.

17. **Natural Environment and Rural Communities Act 2006.** Section 41 of the NERC Act requires the Secretary of State to publish a list of habitats and species that are of principal importance for the conservation of biodiversity in England. The S41 list is used to guide decision-makers such as local planning authorities, in implementing their duty under Section 40 of the Act, to have regard to the conservation of biodiversity in England, when exercising their normal functions. 56 habitats and 943 species of principal importance are included on the S41 list. These are all the habitats and species in England that were identified as requiring action in the UK Biodiversity Action Plan (BAP).

18. **Conservation of Habitats and Species Regulations 2017 (as amended).** The Regulations enact the European Union's Habitats Directive (92/43/EEC) in the UK. The Habitats Directive was designed to contribute to the maintenance of biodiversity within member states through the conservation of sites, known in the UK as Special Areas of Conservation (SACs), containing habitats and species selected as being of EC importance (as listed in Annexes I and II of the Habitats Directive respectively). Member states are required to take measures to maintain or restore these natural and semi-natural habitats and wild species at a favourable conservation status.

19. The Regulations also require the compilation and maintenance of a register of European sites, to include SACs and Special Protection Areas (SPAs)[2] classified under Council Directive 79/409/EEC on the Conservation of Wild Birds (the Birds Directive). These sites constitute the Natura 2000 network. The Regulations impose restrictions on planning decisions likely to significantly affect SPAs or SACs.

20. The Regulations also provide protection to European Protected Species of animals that largely overlaps with the WCA 1981, albeit the provisions are generally stricter. Under Regulation 43 it is an offence, *inter alia*, to:

- Deliberately capture, injure or kill any wild animal of a European Protected Species;
- Deliberately disturb any wild animals of any such species, including in particular any disturbance likely to impair their ability to survive, to breed or reproduce, to rear or nurture their young, to hibernate or migrate, or which is likely to affect significantly their local distribution or abundance;
- Deliberately take or destroy the eggs of such an animal;
- Damage or destroy a breeding site or resting place of such an animal.

21. Similar protection is afforded to European Protected Species of plants, as detailed under Regulation 47.

22. The Regulations do provide a licensing system that permits otherwise illegal activities in relation to European Protected Species, subject to certain tests being fulfilled.

[2] Special Protection Areas (SPAs) are protected sites classified in accordance with Article 4 of the EC Directive on the Conservation of Wild Birds (79/409/EEC) (aka the Birds Directive), which came into force in April 1979. SPAs are classified for rare and vulnerable birds (as listed on Annex I of the Directive), and for regularly occurring migratory species.

Appendix 4404/2:

Arboricultural Impact Assessment & Method Statement

NEW PLACE FARM

PULBOROUGH

Arboricultural Impact Assessment & Method Statement

January 2026
12072_AIA.001 Rev C

COPYRIGHT

The copyright of this document remains with Aspect Arboriculture Ltd. The contents of this Document therefore must not be copied or reproduced in whole or in part for any purpose without the written consent of Aspect Arboriculture Ltd.

Aspect Arboriculture
Hardwick Business Park
Noral Way
Banbury
Oxfordshire
OX16 2AF

t 01295 276066
f 01295 265072

e info@aspect-arbor.com
w www.aspect-arbor.com

CONTENTS

1. Introduction 1
1.1 Background 1
1.2 Scope 2
1.3 Limitations 2

2 Arboricultural Impact Assessment 3
2.1 Existing Tree Cover 3
2.2 Tree Removals 4
2.3 Pruning Works 4

3. Method Statement 5
3.1 Tree Protection Plan 5
3.2 Protective Barriers 5
3.3 Supervised Excavation 7
3.4 Above Soil Hard Surfacing 9
3.5 Proposed Order of Works 10
3.6 Site Manager's Point of Contact for Arboricultural Input 10

4. Conclusions 11

APPENDICES

Tree Protection Plan Appendix A
Works Auditing Schedule Appendix B
Tree Survey Schedule Appendix C
Tree Constraints Plan Appendix D
Tree Protection Barrier Specifications Appendix E

1 INTRODUCTION

1.1 Background

1.1.1 Aspect Arboriculture are instructed by BDW Southern Counties to prepare an Arboricultural Impact Assessment & Method Statement to detail the arboricultural effect and tree protection measures associated with the introduction of consented residential development at New Place Farm, Pulborough.

1.1.2 Planning consent for the development has been granted subject to conditions under ref DC/21/2321. One pre-commencement Condition relates to arboriculture. Condition no.5 requires the production of a Tree Protection Plan and, where needed, construction methodology to ensure the confident protection of retained trees. This AMS has been produced in direct response to this condition, and includes a schedule of works requiring auditing.

1.1.3 Condition 5 reads:

Pre-Commencement Condition: *No development (including demolition pursuant to the permission granted, ground clearance, or bringing equipment, machinery or materials onto the site), shall commence until the following preliminaries have been completed in the sequence set out below:*

- *All hedgerows, trees and vegetation on the site shown for retention within the Arboricultural Impact Assessment [edp3037_r012c] as well as those off-site whose root protection areas ingress into the site, shall be fully protected throughout all construction works by tree protective fencing affixed to the ground in full accordance with section 6 of BS 5837 'Trees in Relation to Design, Demolition and Construction - Recommendations' (2012).*
- *Once installed, the fencing shall be maintained during the course of the development works and until all machinery and surplus materials have been removed from the site.*
- *Areas so fenced off shall be treated as zones of prohibited access, and shall not be used for the storage of materials, equipment or machinery in any circumstances. No mixing of cement, concrete, or use of other materials or substances shall take place within any tree protective zone, or close enough to such a zone that seepage or displacement of those materials and substances could cause them to enter a zone.*

Any trees or hedges on the site which die or become damaged during the construction process shall be replaced with trees or hedging plants of a type, size and in positions agreed by the Local Planning Authority.

1.1.4 This AIA, AMS, Works Auditing Schedule and Tree Protection Plan (TPP) has been prepared in direct response to the Council's request and Policy requirement, and specifies all safeguarding measures which must be adopted during the development to minimise harm occurring to retained trees, including those which are under third party control and are positioned outside of the application area boundary.

1.1.5 It is our understanding that this work will be submitted to Horsham District Council, to enable determination of the application. Once approved, the safeguarding measures and works should be implemented as specified and maintained to the Council's satisfaction until completion of the works identified.

1.1.6 The confident protection of retained trees will be achieved through the use of the appended Tree Protection Plan (appendix A) and Works Auditing Schedule (appendix B), alongside other supporting documents included within appendices C, D and E.

1.1.7 This updated document has been produced in response to receipt of drainage proposals which postdate the previous submitted revision.

1.2 Scope

1.2.1 This work relates to arboriculture therefore reliance should not be given to comments made in respect of other disciplines i.e. civil engineering or construction phasing, without first referencing an appropriate expert.

1.3 Limitations

1.3.1 This document has been prepared to identify the arboricultural effect of the proposals and detail safeguarding measures during development and should not be interpreted as a report on tree health and safety. Reasonable effort has been made to identify visible defects whilst carrying out the tree survey, however trees are prone to natural failure without warning; no guarantee can be made as to the absolute safety of any of the trees surveyed.

1.3.2 Aspect's opinion of tree condition and structural potential is valid for a limited twelve month period from the date of survey. Validity is assumed in the absence of inclement weather and no change to the trees' existing context. A copy of the site's tree survey information is provided within appendix C.

2 ARBORICULTURAL IMPACT ASSESSMENT

2.1 Tree Removals

2.1.1 Introducing the consented development to the former nursery will unavoidably incur tree removal. Through design, the unavoidable removals have been focused solely only low quality components of the tree cover, with all moderate and high quality (category A & B) tree cover retained as features of the proposed development.

2.1.2 Notably, the inclusion of the Hybrid Black Poplar collections G23 and G18 accord with the Council's advice provided during the outline application. It is however proposed that these removals are phased to limit their initial landscape effect. The initial removals should comprise trees with particularly poor basal condition, alongside a repollarding of the remainder to the previous pruning points. This will abate the risk currently posed and will allow the maturation of replacement plantings which will ultimately compensate for their removals.

2.1.3 **Table 1:** Tree Removals to implement consented development.

Category A	Category B	Category C
None	**None**	**T53** Willow-leaved Pear **G8, G29** Leyland Cypress **G14+Δ** (c.3m section) **G18+Δ** (Phased, c.4.5m for footpath & c.3m section for drainage) **G22+** **G23** Goat Willow & Hybrid Black Poplar **G24+Δ** **G26Δ** Alder & Goat Willow **G30+** **G31+** **G32+Δ** (c.3m section) **G33+Δ** (c.25m section) **G34+** **G36+** **H1+** **H2+Δ**

+ Denotes assemblage of three or more species (refer to appendix C)
Δ Denotes partial removal of tree group or hedge

2.1.4 In addition, to the removals required to deliver the consented development, it is also recommended that low quality remnants of the former plant nursery are removed from within the northern portion of the site to all the introduction of a higher quality coherent scheme of landscaping to be introduced.

2.1.5 **Table 2:** Tree removals to introduce proposed landscape provision

Category A	Category B	Category C
None	**None**	**T6** Tulip Tree **T59 & T60** Narrow Leaved Ash **G2+** (scrub) **G4+** **G6+** **G7+** **G8** Leyland Cypress

+ Denotes assemblage of three or more species (refer to appendix B)
Δ Denotes partial removal of tree group or hedge

2.1.6 Trees to be removed will be spray marked with a red flash by the project arboriculturist to safeguard against erroneous felling.

2.1.7 Felling works should be timed to avoid the main nesting season for birds between 1st March and 31st August. If scheduled within this period an ecologist must be present to advise on any necessary protective measures, and to confirm that tree works are not likely to cause disturbance to nesting birds.

2.1.8 This work will be undertaken in accordance with the principles within BS3998:2010 by a qualified and competent contractor to ensure cuts are performed correctly and positioned so as to avoid damage/harm to surrounding retained trees.

2.2 Pruning Works

2.2.1 Although not required to accommodate the proposed development parcels, it is recommended that dead and dysfunctional branches are removed from the canopies of established retained trees oversailing areas of high public use, including highway, to help mitigate the risk of future tree related hazards emerging. It is also recommended that a climbed inspection of the trees' structural condition is undertaken at the same time as the deadwood removal is undertaken.

2.2.2 This is of particular relevance to retained sections of Poplar collections G18, G19 and onsite components of G33. The work required comprises repeat pollarding of the collections as a whole, to the previous pruning points; seeking the abatement of risk currently posed by the trees. Several components within the collection G18 are significantly decayed within their bole, such that the immediate removal of the complete tree is recommended – fortuitously, these are focussed at the proposed vehicular access point; where their removal would be required regardless of their diminished condition..

2.2.3 Pruning works should be timed to avoid the main nesting season for birds between 1st March and 31st August. If scheduled within this period an ecologist must be present to advise on any necessary protective measures, and to confirm that tree works are not likely to cause disturbance to nesting birds.

2.2.4 Pruning work must be undertaken in accordance with section 7.3 (for removal of deadwood), section 7.8 (for selective pruning) and section 7.10 (for pollarding) of BS3998:2010. A

qualified and competent contractor should be employed to ensure that cuts are performed correctly and positioned so as to avoid future structural defects or physiological issues, facilitate growth and maintain aesthetic value.

3 METHOD STATEMENT

3.1 Tree Protection Plan

3.1.1 The Tree Protection Plan (TPP) provided in appendix A will be relied upon during the works. It should be read in conjunction with the entirety of this document. To prevent avoidable damage occurring to retained trees or erroneous tree loss, a scaled A1 copy of the TPP, accompanied by a copy of this document will be provided to the Site Manager. This will ensure they are able to:

- Clearly identify all retained trees;
- Identify the correct locations for tree protection barriers;
- Identify features of the site that must be prepared/installed under an arboricultural watching brief;
- Request attendance of the Project Arboriculturist on site for site monitoring and to provide advice in case of any emerging issues;
- Demonstrate compliance with the Council's consent for the works by safeguarding trees which are to be retained, and evidencing this by completing the Works Auditing Schedule (appendix B).

3.2 Protective Barriers & Ground Protection

3.2.1 Tree protection barriers are required to safeguard retained trees from damage during construction works. Protective barriers must therefore be installed before any construction works are carried out, and remain in situ until completion of works in the vicinity. Where the direct protection of trees is required, the protective barriers should comprise the default specification provided within BS5837:2012 (barrier type A below).

3.2.2 Plate 1. Tree Protection Barriers.

3.2.3 Where hedgerows are to be protected, it is appropriate to use a reduced specification of barrier. This specification is illustrated above as Barrier Type B, omits diagonal bracing to the rear, and is formed of heras panels mounted on pinned feet. Rigidity is ensured through the use of a driven 100x100mm timber post or scaffold pole every second panel.

3.2.4 The location for protective barriers has been informed by retained trees' canopy extents, root protection areas (RPA), and where possible, areas designated for structural landscaping that need to be protected from construction operations to prevent soil structure from being damaged. The alignment of protective barriers is illustrated with a bold blue line within the TPP (appendix A) illustrating the default barrier, and a light blue dashed line denoting the reduced specification barrier.

3.2.5 It is necessary to offset the tree protection barriers from the external walls of plot 65 to allow for the erection of scaffolding. Where this is required, the intermediate area of Root Protection Area will be protected from compaction or disturbance during development. This can be achieved through the installation of polyethylene trackmats or similar prior to commencement and which remain in situ for the duration of construction in the vicinity. The area where ground protection is required is illustrated within the Tree Protection Plan with a light blue hatch.

3.2.6 The Site Manager will be responsible for arranging attendance of the Project Arboriculturist, for the purpose of setting out barriers; issues will be resolved on site and reported to the Council's Arboricultural Officer by the Project Arboriculturist.

3.3 Supervised Excavation

3.3.1 As part of the development proposal there is also a requirement to carry out excavation works within the RPAs of retained trees. The areas of RPAs affected are toward the periphery of the RPAs where the presence of significant roots is unlikely, and the natural turnover of rooting material is highest.

3.3.2 Table 2. Excavation Works.

Tree		Excavation Works
T58	-	3.8m^2 (3.3%) of RPA to accommodate highway improvements
G18	-	Proposed drainage route (through cleared section) to be excavated under direct arboricultural supervision.
G28	-	Inspection chambers to be excavated by hand for first c.600mm depth; drainage route to be directionally drilled under tree line

3.3.3 To avoid detriment occurring to the affected trees, the excavation works must be carried out sensitively and under arboricultural supervision, adopting the principles within section 7.2 of BS5837:2012. The extent of excavation works which must be carried out under arboricultural supervision are illustrated within the TPP (appendix A) with an orange wash.

3.3.4 The drainage route through cleared section of group G18 is to be excavated by machine due to the depth and size of the excavation required. This work is to be carried out under direct arboricultural supervision to prevent accidental damage to adjacent trees.

3.3.5 During supervised excavation works within the RPAs of retained trees, the following procedure will be adopted:

i. The breaking up and clearance of the existing soils must be undertaken under arboricultural supervision, using a low impact method of excavation, utilising hand tools, an air-spade, or a vacuum excavator.

ii. If necessary, roots that are less than 25mm diameter will be pruned back, preferably to a side branch, using sharp cutting tools in accordance with best practice i.e. using secateurs or pruning saw.

iii. During the works the protective bark of larger roots is not to be damaged, until the project arboriculturist has judged whether they can be retained or not.

iv. No roots over 25mm will be pruned without approval of the appointed Project Arboriculturist as they may be integral to tree health and stability. If it becomes necessary to prune roots over 25mm diameter to accommodate site features, the Project Arboriculturist will provide the Developer and the Council's Arboricultural Officer with appropriate recommendations for remedial action/ management.

v. Any exposed roots which can be retained will be covered in hessian or clean top soil to protect from dehydration and temperature flux. Hessian is to be removed prior to backfilling.

vi. Areas adjacent to roots that are to be filled with concrete will be lined with an impermeable membrane to prevent concrete leachate coming into contact with tree roots.

vii. Any use of an excavator to complete excavations will occur from outside the trees' RPA (which will be spray-marked on the ground in advance of the works taking place). A toothless bucket will be utilised at all times.

viii. A record of exposed roots will be made and accompanied by a photographic log.

ix. Should any issues be raised during the works then the Project Arboriculturist will inform the Developer and the Council's Arboricultural Officer, indicating the nature of the problem and recommendations for remedial action (if required).

x. Tree protection barriers are to be reinstated or repositioned on completion - whichever is within the interest of protecting RPAs. This will be determined by the Project Arboriculturist.

xi. Upon request, written confirmation of the works being undertaken to a satisfactory standard can be provided to the Developer and the Council's Arboricultural Officer by the Project Arboriculturist.

3.4 Above Soil Hard Surfacing

3.4.1 The proposed development also includes the introduction of three footpath links passing through the RPA of G28. To prevent root severance associated with traditional construction, it will be necessary to construct the section utilising a CellWeb (or similar) sub-base, thereby minimising any requirement for excavation. The areas where above soil surfacing must be utilised are illustrated within the TPP (appendix A) with a blue wash

3.4.2 The construction of the new hard surfacing above existing ground levels will be achieved by utilising a 75mm depth standard CellWeb sub-base for footpath (as a minimum). Within RPAs, the surfaces will be overlain with a permeable wearing course and non-invasive retaining edges (refer to Figure 2 overleaf).

3.4.3 Installation of CellWeb will adopt the following procedure:

Pre-commencement:

i. The Project Arboriculturist will brief the installation team on the importance of preventing soil compaction, oxygen/moisture restriction and the need for any excavation works within RPAs which may incur unnecessary root severance.

ii. Where protective barriers need to be temporarily repositioned to facilitate working room, areas of exposed RPA's will be protected by polyethylene Trackmats.

iii. The Project Arboriculturist will spray-mark the extent of affected RPAs on the ground prior to the commencement of works occurring for the benefit of machinery operators. A photograph of the spray-marked RPA limit and extent of affected area will be taken.

Installation:

iv. To prevent migration of the infill material and future loss of structural integrity, the area requiring no-dig surfacing must be covered with a porous geotextile underlay. This is to occur before installation of the cellular confinement system.

v. The cellular confinement system will be staked and expanded across the installation footprint area then cut to size.

vi. The edges are to be retained with non-invasive timber boards pinned with wooden stakes and an earth batter.

3.4.4 **Figure 2.** Typical CellWeb Section.

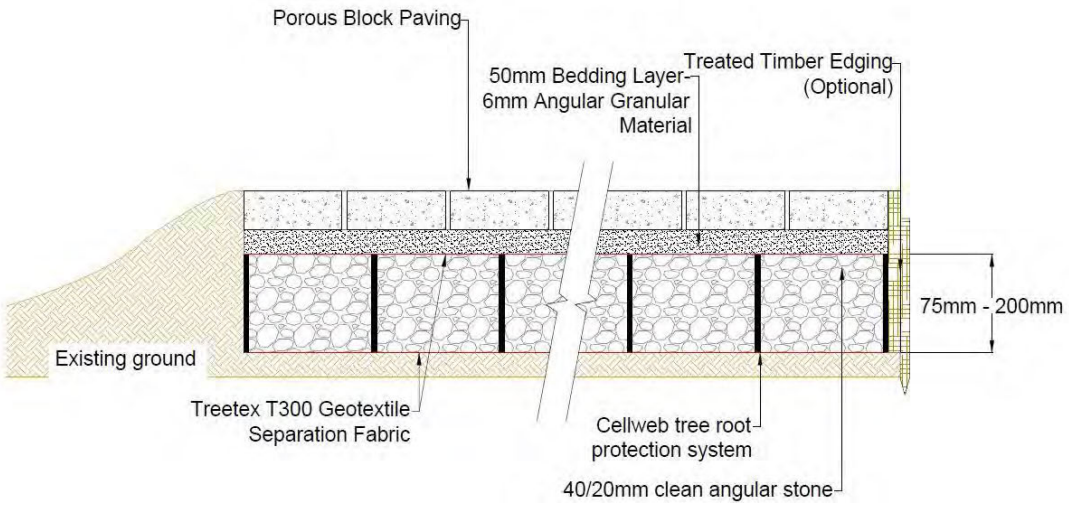

3.5 **Proposed Order of Works**

i. Site meeting between the Project Arboriculturist, Site Manager and the Council's Arboricultural Officer prior to commencement of the works. Stages of arboricultural auditing/monitoring requirements will be identified/agreed.

ii. Necessary tree removals to be carried out prior to installation of tree protection barriers and commencement of construction in the vicinity.

iii. Tree protection barriers are to be installed following removals and prior to construction works commencing in the vicinity. Upon request, barrier positions can be set-out by the Project Arboriculturist, as detailed within this document.

iv. The Council's Arboricultural Officer shall be informed of the proposed commencement date as soon as possible to allow the inspection of protection measures.

v. The Site Manager will assume responsibility for arranging the attendance of the Project Arboriculturist for the supervision of works within retained trees' RPAs, as detailed with the Works Auditing Schedule (appendix B).

3.6 **Site Manager's Point of Contact for Arboricultural Input:**

A. Mr James Bardey
Principal Arboricultural Consultant
Aspect Arboriculture
Telephone: 01295 276066
Email: James.Bardey@aspect-arbor.com

4 CONCLUSIONS

4.1 This document has been prepared in response to condition 5 attached to the site's planning consent (ref: DC/21/2321). The document has been prepared to demonstrate how retained trees will be safely integrated as part of the scheme, and construction mitigation required to minimise root disturbance during the proposed development. It has been informed by guidance provided in BS5837:2012 including a survey of the site's existing trees (surveyed during May 2024).

4.2 Pursuant to the instruction, this document and its supporting work (Appendices A - E) identifies all aspects of the proposed works that must be managed to facilitate the confident protection of retained trees during construction.

4.3 To ensure confident tree retention, siting of tree protection barriers and the specified construction works must be audited by the Project Arboriculturist; the outcome of these works will be reported to the Council's Arboricultural Officer on completion. These elements are specified within the Works Auditing Schedule (appendix B).

4.4 It is Aspect's opinion that, subject to strict adherence to this document, the proposed development can be constructed without detrimentally affecting retained trees.

APPENDICES

APPENDIX A

TREE PROTECTION PLAN (12072 TPP 01 Rev D)

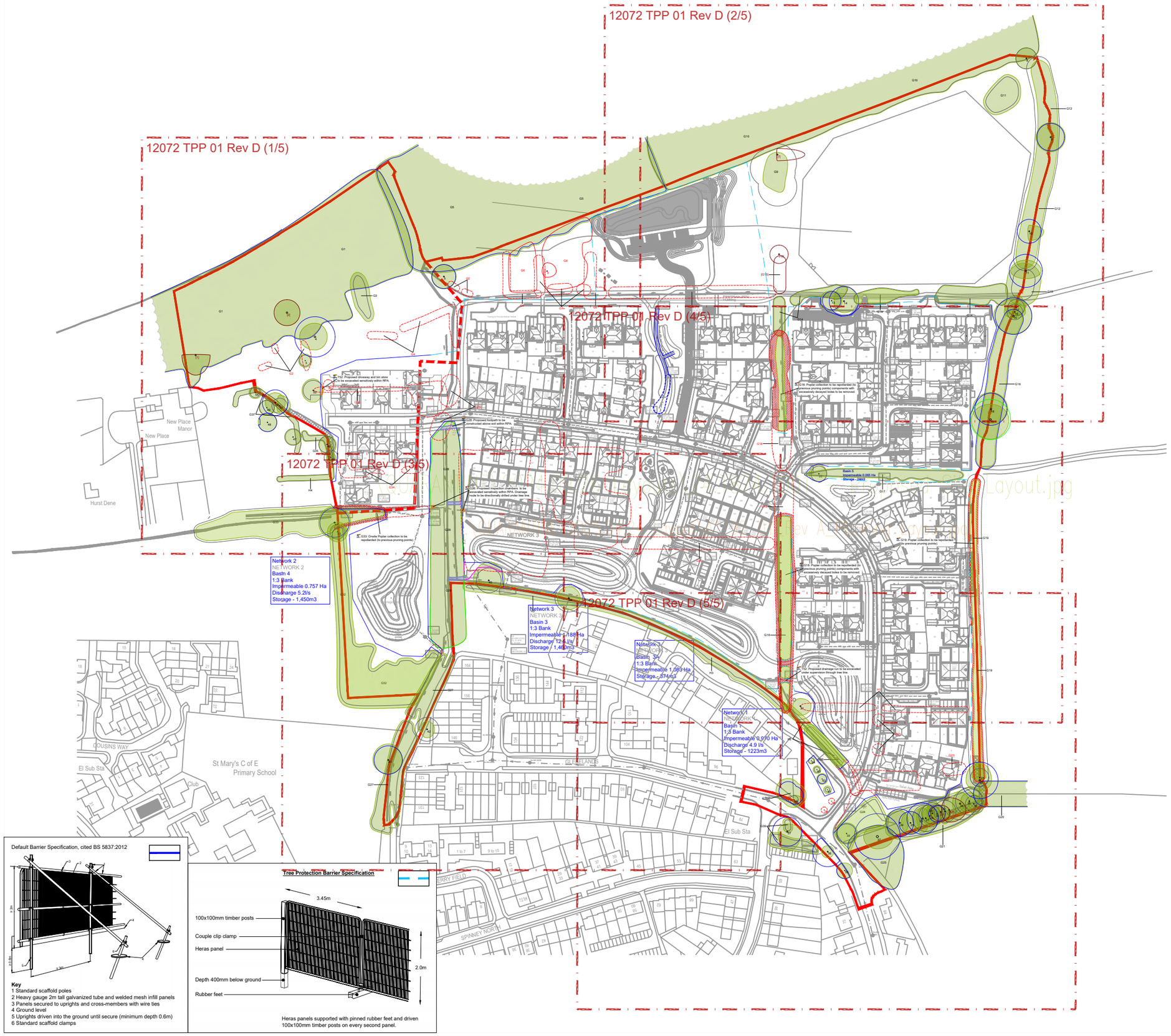
12072 TPP 01 Rev D (1/5)
12072 TPP 01 Rev D (2/5)
12072 TPP 01 Rev D (3/5)
12072 TPP 01 Rev D (4/5)
12072 TPP 01 Rev D (5/5)
New Place Manor
New Place
Hurst Dene
COUSINS WAY
St Mary's C of E Primary School
Club
El Sub Sta
GLEBELANDS
SPINNEY NORTH
NETWORK 3
Network 2
NETWORK 2
Bastn 4
1:3 Bank
Impermeable 0.757 Ha
Discharge 5.2l/s
Storage - 1,450m3
Network 3
NETWORK 3
Basin 3
1:3 Bank
Impermeable 1.188 Ha
Discharge 12.4 l/s
Storage - 1,450m3
Network 3
NETWORK 3
Basin 3A
1:3 Bank
Impermeable 1.093 Ha
Storage - 874m3
Network 1
NETWORK 1
Basin 1
1:3 Bank
Impermeable 0.970 Ha
Discharge 4.9 l/s
Storage - 1223m3
Basin 5
Impermeable 0.095 Ha
Storage - 24m3
T42: Proposed driveway and bin store to be excavated sensitively within RPA.
T43: Proposed footpath to be constructed above and within RPA.
T44: Proposed inspection chambers to be excavated sensitively within RPA. Drainage route to be directionally drilled under tree line.
G23: Ornate Poplar collection to be repollarded (to previous pruning points).
G16: Poplar collection to be repollarded (to previous pruning points) components with excessively decayed boles to be removed.
G19: Poplar collection to be repollarded (to previous pruning points).
G18: Poplar collection to be repollarded (to previous pruning points) components with excessively decayed boles to be removed.
T52: Proposed drainage run to be excavated under supervision through tree line.
Solar Array
Solar Array
Solar Array

Default Barrier Specification, cited BS 5837:2012

Key
1 Standard scaffold poles
2 Heavy gauge 2m tall galvanized tube and welded mesh infill panels
3 Panels secured to uprights and cross-members with wire ties
4 Ground level
5 Uprights driven into the ground until secure (minimum depth 0.6m)
6 Standard scaffold clamps

Tree Protection Barrier Specification

Heras panels supported with pinned rubber feet and driven 100x100mm timber posts on every second panel.

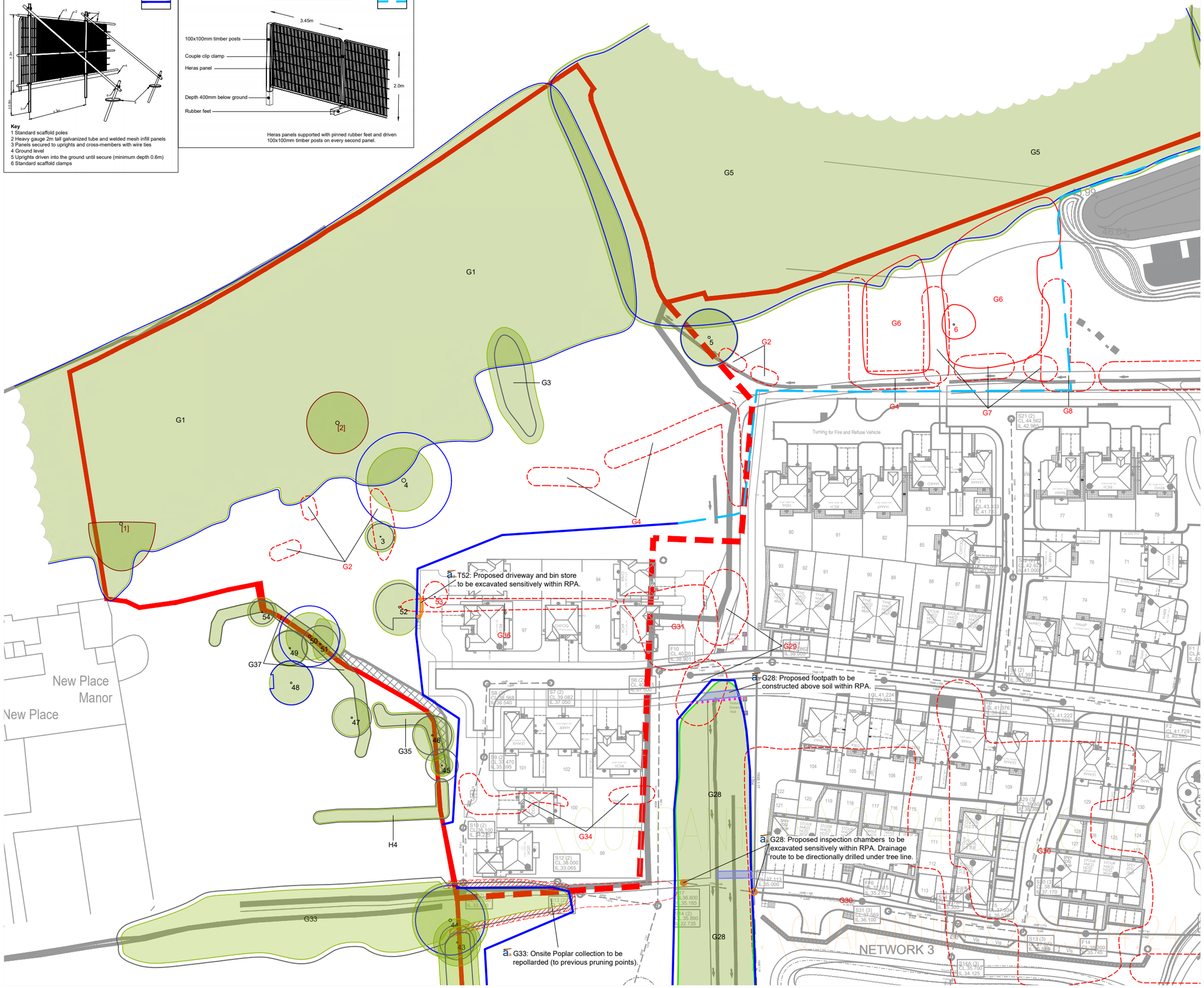

1:1000 @ A3

0m 10m 20m 40m

KEY:

- Site Boundary
- Tree Numbers
- Tree Canopies
- Category 'U' Trees
- Category 'A' RPA
- Category 'B' RPA
- Category 'C' RPA
- Trees to be Removed
- Pruning Works
- Tree Protection Barrier
- Tree Protection Barrier (Secondary Specification)
- Tree Protection Barrier (2nd Position)
- Supervised Excavation
- Above Soil Surfacing

Note: Trees 1, 16, 17, 23, 32, 36-39, 41, 42, Groups G1-G3, G5-G7, G10, G11, G14, G16, G17, G19-G21, G23-G27, G30, G32-G34 and Hedgerows H1-H3 have been plotted using measurements onsite in conjunction with aerial imagery. Their locations were not recorded on the topographical survey of the site.

Note: The RPA footprint for Trees 48, 52, 55 & 56 have been displaced to allow for the effect of the adopted highway. The surface area of the RPA has not been reduced.

REV	DATE	NOTE	Drawn	Chk'd
D	Jan '26	Updated to include landscape proposals	JB	n/a
C	Dec '25	Updated to include drainage proposals	JB	n/a
B	Jun '25	Updated to new layout	JB	n/a
A	Feb '25	Updated to illustrate phased removal	JB	n/a

REVISIONS

aspect arboriculture

TITLE

New Place Farm, Pulborough
Tree Protection Plan

CLIENT

David Wilson Homes, Southern Counties

SCALE	DATE	DRAWN
1:1000 @ A3	DEC 2024	GW

DRAWING NUMBER	REVISION
12072 TPP 01 Rev D (1/5)	

Based on: A1192_09D_Planning Layout, 24.1874 - GA_Hard & X-LDE-Drainage Redrow PLANNING

Default Barrier Specification, cited BS 5837:2012

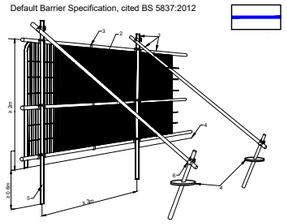

Key
1 Standard scaffold poles
2 Heavy gauge 2m tall galvanized tube and welded mesh infill panels
3 Panels secured to uprights and cross-members with wire ties
4 Ground level
5 Uprights driven into the ground until secure (minimum depth 0.6m)
6 Standard scaffold clamps

Tree Protection Barrier Specification

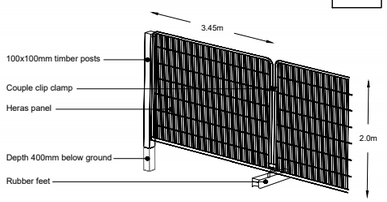

Heras panels supported with pinned rubber feet and driven 100x100mm timber posts on every second panel.

1:1000 @ A3

0m 10m 20m 40m

KEY:

- Site Boundary
- Tree Numbers
- Tree Canopies
- Category 'U' Trees
- Category 'A' RPA
- Category 'B' RPA
- Category 'C' RPA
- Trees to be Removed
- Pruning Works
- Tree Protection Barrier
- Tree Protection Barrier (Secondary Specification)
- Tree Protection Barrier (2nd Position)
- Supervised Excavation
- Above Soil Surfacing

Note: Trees 1, 16, 17, 23, 32, 36-39, 41, 42, Groups G1-G3, G5-G7, G10, G11, G14, G16, G17, G19-G21, G23-G27, G30, G32-G34 and Hedgerows H1-H3 have been plotted using measurements onsite in conjunction with aerial imagery. Their locations were not recorded on the topographical survey of the site.

Note: The RPA footprint for Trees 48, 52, 55 & 56 have been displaced to allow for the effect of the adopted highway. The surface area of the RPA has not been reduced.

REV	DATE	NOTE	Drawn	Chk'd
D	Jan '26	Updated to include landscape proposals	JB	n/a
C	Dec '25	Updated to include drainage proposals	JB	n/a
B	Jun '25	Updated to new layout	JB	n/a
A	Feb '25	Updated to illustrate phased removal	JB	n/a

REVISIONS

aspect arboriculture

TITLE

New Place Farm, Pulborough Tree Protection Plan

CLIENT

David Wilson Homes, Southern Counties

SCALE	DATE	DRAWN
1:1000 @ A3	DEC 2024	GW

DRAWING NUMBER: 12072 TPP 01 Rev D (2/5)

REVISION

Based on: A1192_09D_Planning Layout, 24.1874 - GA_Hard & X-LDE-Drainage Redrow PLANNING

a. G28: Proposed inspection chambers to be excavated sensitively within RPA. Drainage route to be directionally drilled under tree line.

a. G33: Onsite Poplar collection to be repollarded (to previous pruning points).

work 2
TWORK 2
in 4
Bank
ermeable 0.757 Ha
charge 5.2l/s
rage - 1,450m3

Network 3
NETWORK 3
Basin 3
1:3 Bank
Impermeable 1.188 Ha
Discharge 12.5 l/s
Storage - 1,460m3

Network 3
NETWORK 3
Basin 3A
1:3 Bank
Impermeable 1.083 Ha
Storage - 374m3

Network 1
NETWORK 1
Basin 1
1:3 Bank
Impermeable 0.970 Ha
Discharge 4.9 l/s
Storage - 1223m3

Default Barrier Specification, cited BS 5837:2012

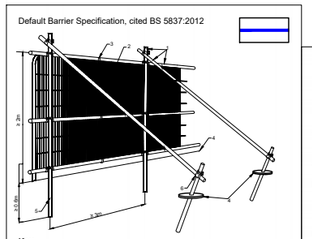

Key
1 Standard scaffold poles
2 Heavy gauge 2m tall galvanized tube and welded mesh infill panels
3 Panels secured to uprights and cross-members with wire ties
4 Ground level
5 Uprights driven into the ground until secure (minimum depth 0.6m)
6 Standard scaffold clamps

Tree Protection Barrier Specification

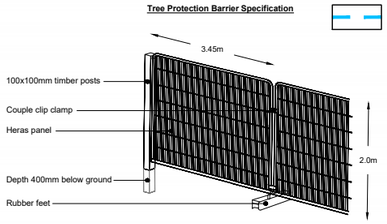

Heras panels supported with pinned rubber feet and driven 100x100mm timber posts on every second panel.

1:1000 @ A3

0m 10m 20m 40m

KEY:

- Site Boundary
- 15 Tree Numbers
- Tree Canopies
- (8) Category 'U' Trees
- Category 'A' RPA
- Category 'B' RPA
- Category 'C' RPA
- 8 Trees to be Removed
- Pruning Works
- Tree Protection Barrier
- Tree Protection Barrier (Secondary Specification)
- Tree Protection Barrier (2nd Position)
- Supervised Excavation
- Above Soil Surfacing

Note: Trees 1, 16, 17, 23, 32, 36-39, 41, 42, Groups G1-G3, G5-G7, G10, G11, G14, G16, G17, G19-G21, G23-G27, G30, G32-G34 and Hedgerows H1-H3 have been plotted using measurements onsite in conjunction with aerial imagery. Their locations were not recorded on the topographical survey of the site.

Note: The RPA footprint for Trees 48, 52, 55 & 56 have been displaced to allow for the effect of the adopted highway. The surface area of the RPA has not been reduced.

REV	DATE	NOTE	Drawn	Chk'd
D	Jan '26	Updated to include landscape proposals	JB	n/a
C	Dec '25	Updated to include drainage proposals	JB	n/a
B	Jun '25	Updated to new layout	JB	n/a
A	Feb '25	Updated to illustrate phased removal	JB	n/a

REVISIONS

aspect arboriculture

TITLE
New Place Farm, Pulborough
Tree Protection Plan

CLIENT
David Wilson Homes, Southern Counties

SCALE	DATE	DRAWN
1:1000 @ A3	DEC 2024	GW

DRAWING NUMBER: 12072 TPP 01 Rev D (3/5)
REVISION:

Based on: A1192_09D_Planning Layout, 24.1874 - GA_Hard & X-LDE-Drainage Redrow PLANNING

1:1000 @ A3

0m 10m 20m 40m

KEY:

- Site Boundary
- Tree Numbers
- Tree Canopies
- Category 'U' Trees
- Category 'A' RPA
- Category 'B' RPA
- Category 'C' RPA
- Trees to be Removed
- Pruning Works
- Tree Protection Barrier
- Tree Protection Barrier (Secondary Specification)
- Tree Protection Barrier (2nd Position)
- Supervised Excavation
- Above Soil Surfacing

Note: Trees 1, 16, 17, 23, 32, 36-39, 41, 42, Groups G1-G3, G5-G7, G10, G11, G14, G16, G17, G19-G21, G23-G27, G30, G32-G34 and Hedgerows H1-H3 have been plotted using measurements onsite in conjunction with aerial imagery. Their locations were not recorded on the topographical survey of the site.

Note: The RPA footprint for Trees 48, 52, 55 & 56 have been displaced to allow for the effect of the adopted highway. The surface area of the RPA has not been reduced.

REV	DATE	NOTE	Drawn	Chk'd
D	Jan '26	Updated to include landscape proposals	JB	n/a
C	Dec '25	Updated to include drainage proposals	JB	n/a
B	Jun '25	Updated to new layout	JB	n/a
A	Feb '25	Updated to illustrate phased removal	JB	n/a

REVISIONS

aspect arboriculture

TITLE

New Place Farm, Pulborough
Tree Protection Plan

CLIENT

David Wilson Homes, Southern Counties

SCALE	DATE	DRAWN
1:1000 @ A3	DEC 2024	GW

DRAWING NUMBER	REVISION
12072 TPP 01 Rev D (4/5)	

Based on: A1192_09D_Planning Layout, 24.1874 - GA_Hard & X-LDE-Drainage Redrow PLANNING

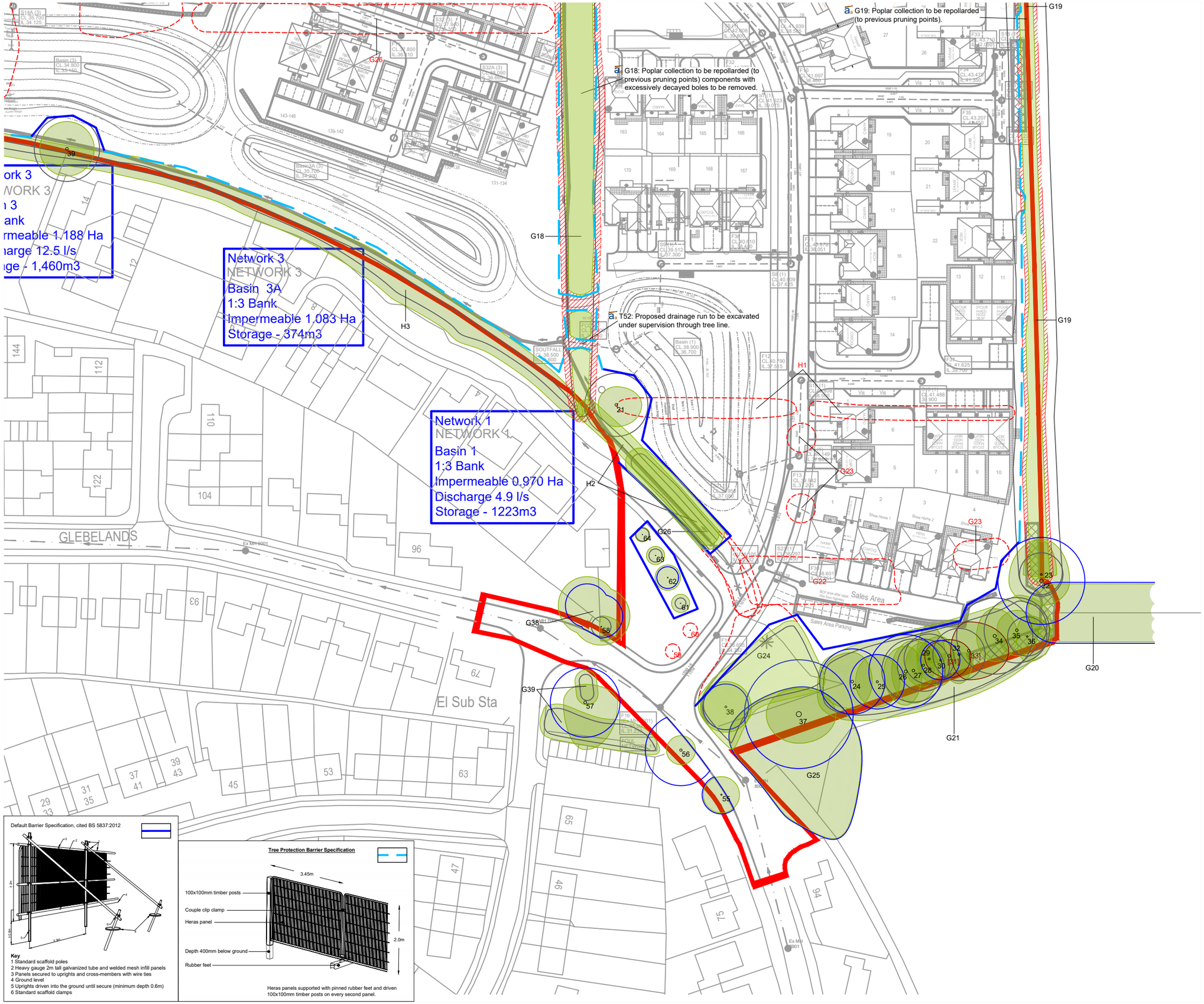

Default Barrier Specification, cited BS 5837:2012

Key
1 Standard scaffold poles
2 Heavy gauge 2m tall galvanized tube and welded mesh infill panels
3 Panels secured to uprights and cross-members with wire ties
4 Ground level
5 Uprights driven into the ground until secure (minimum depth 0.6m)
6 Standard scaffold clamps

Tree Protection Barrier Specification

Heras panels supported with pinned rubber feet and driven 100x100mm timber posts on every second panel.

1:1000 @ A3

0m 10m 20m 40m

KEY:

- Site Boundary
- Tree Numbers
- Tree Canopies
- Category 'U' Trees
- Category 'A' RPA
- Category 'B' RPA
- Category 'C' RPA
- Trees to be Removed
- Pruning Works
- Tree Protection Barrier
- Tree Protection Barrier (Secondary Specification)
- Tree Protection Barrier (2nd Position)
- Supervised Excavation
- Above Soil Surfacing

Note: Trees 1, 16, 17, 23, 32, 36-39, 41, 42, Groups G1-G3, G5-G7, G10, G11, G14, G16, G17, G19-G21, G23-G27, G30, G32-G34 and Hedgerows H1-H3 have been plotted using measurements onsite in conjunction with aerial imagery. Their locations were not recorded on the topographical survey of the site.

Note: The RPA footprint for Trees 48, 52, 55 & 56 have been displaced to allow for the effect of the adopted highway. The surface area of the RPA has not been reduced.

REV	DATE	NOTE	Drawn	Chk'd
D	Jan '26	Updated to include landscape proposals	JB	n/a
C	Dec '25	Updated to include drainage proposals	JB	n/a
B	Jun '25	Updated to new layout	JB	n/a
A	Feb '25	Updated to illustrate phased removal	JB	n/a

REVISIONS

aspect arboriculture

TITLE

New Place Farm, Pulborough
Tree Protection Plan

CLIENT

David Wilson Homes, Southern Counties

SCALE	DATE	DRAWN
1:1000 @ A3	DEC 2024	GW

DRAWING NUMBER: 12072 TPP 01 Rev D (5/5)

REVISION

Based on: A1192_09D_Planning Layout, 24.1874 - GA_Hard & X-LDE-Drainage Redrow PLANNING

APPENDIX B

WORKS AUDITING SCHEDULE

Works Auditing Schedule

Works Requiring Auditing	Tree No.	Date Undertaken	Date Reported to LPA
1. Pre-commencement meeting identifying tree removals, tree protection barrier locations and safeguarding measures, as specified within 12072_AIA.001 Rev C and illustrated on drawing no. 12072_TPP.01 Rev D.	As drawn		
2: Inspection of tree protection barriers and prior to commencement of works by Project Arboriculturist.	As drawn		
3: Above Soil Hard Surfacing	G28		
4: Supervised Excavation	T52 G18 G28		

This schedule will be completed as evidence that works have been undertaken as per the approved methodology.

APPENDIX C

TREE SURVEY SCHEDULE (12072 TS 01)

aspect arboriculture

BS 5837:2012 Tree Schedule: New Place Farm, Pulborough

12072 TS 01

aspect arboriculture

BS5837:2012 Tree Survey: Explanation of Survey Criteria

*Area around tree deemed to contain sufficient roots and rooting volume to maintain the tree's viability, and where the protection of roots and soil structure is a priority. *The RPA has been manipulated to allow for various site features, i.e. roads, structures or changes in levels. Please refer to the Tree Constraints Plan for these changes.*

e.g.: young, semi-mature, early-mature, mature or over-mature

Sequential reference number cited on all aspect drawing.

Height and Crown spread measured to the nearest half meter; # denotes where this is estimated.

Category prefix A-C denotes arboricultural quality, decreasing from A (high) to C (low); Subcategories 1, 2 and 3 highlight associated arboricultural (1), landscape (2) and ecological (3) qualities.

Category U trees are those in such a condition that they cannot be realistically retained as living trees in the current context for the long term.

Tree Number	Common Species Name	Trunk Diameter (mm)	Height (m)	Crown Spread (m)					Crown Clearance (m)	Life Stage	Physiological Condition	Structural Condition	Comments	BS5837 Category	RPA Radius (m)
				N	E	S	W	radial							

Measured to the nearest 10mm; # denotes estimated diameter where access is not possible.

e.g.: above-average, average, below average or dead

General observations, i.e. defects, preliminary management recommendation, presence of pests/disease, perceived significance.

Height of first significant branch and/or canopy

e.g.: good, indifferent, poor, or hazardous

Colour band key:

Category A
Category B
Category C
Category U

The following survey should not be interpreted as a report on tree health and safety. Aspect's opinion of tree condition and structural potential is valid for a limited period of 12 months from the date of inspection. Validity is assumed in the absence of inclement weather and no change to the trees existing setting.

Tree Number	Common Species Name	Trunk Diameter (mm)	Height (m)	Crown Spread (m) N	E	S	W	Radial	First Significant Branch (m)	Crown Clearance (m)	Life Stage	Physiological Condition	Structural Condition	Comments	BS5837 Category	RPA Radius (m)
1	Hybrid Black Poplar	840 oi	23#	0.5	9.5	13	9#		6	6#	Mature	Average	Hazardous	Clad and obscured by Ivy, unable to thoroughly inspect Large cavity on northern aspect of trunk from c.1m to c.3m, active decay within Leans south from ground level Hazardous structural condition, unsuitable for retention	U	N/A
2	Sycamore	1000# at base	20#					8.5	2.5	2.5	Mature	Below Average	Poor	Clad and obscured by Ivy, unable to thoroughly inspect Low crown break Above average internal deadwood Suspected *Ganoderma applantum* on eastern aspect of trunk Multiple cavities and areas of decay within trunk, branch unions and scaffold structure	U	N/A
3	Purple Plum	2*200 2*90 #	7					4.25	1	1	Early Mature	Average	Indifferent	Clad and obscured by Ivy, unable to thoroughly inspect Stem inaccessible due to dense understory Unremarkable example of species	C12	3.6
4	Sycamore	850 690 oi	14	9	8	8.5	10		1.5	1.5	Mature	Average	Poor	Clad and obscured by Ivy, unable to thoroughly inspect Frontage component of G1 Slightly sparse crown for species Average internal deadwood with large diameter in lower crown Bifurcates from c.0.5m, union obscured by Ivy Western stem leans heavily to west Cavity within old wound in western aspect of western stem Recommend PiCUS investigation to determine extent of dysfunctional wood with full review of category upon results Individually of low significance, conferred moderate value as component of wider collective	B2	13.2
5	English Oak	400 500 #	13					8	1.5#	1.5	Early Mature	Average	Indifferent	Clad and obscured by Ivy, unable to thoroughly inspect Partially obscured by bramble Squat crown form Low crown break Well balanced radial crown and scaffold structure Ditch west of stem running northwest to southwest Appears to bifurcate from ground level Moderate example of species	B12	7.8
6	Tulip Tree	430 oi	14	5.5	6	4	3.25		3	2.5	Early Mature	Average	Indifferent	Clad and obscured by Ivy, unable to thoroughly inspect Component of G6 Etiolated form Mutually suppressed and cohesive with companions Unremarkable example of species	C1	5.1

Tree Number	Common Species Name	Trunk Diameter (mm)	Height (m)	Crown Spread (m) N	E	S	W	Radial	First Significant Branch (m)	Crown Clearance (m)	Life Stage	Physiological Condition	Structural Condition	Comments	BS5837 Category	RPA Radius (m)
7	Horse Chestnut	800#	6	4#	18	4	0.5		N/A	0	Early Mature	Below Average	Hazardous	Partially obscured by bramble, unable to thoroughly inspect Stem inaccessible due to dense understory Failed component of G9 Appears to have failed at base Fallen to east Hazardous structural condition, unsuitable for retention	U	N/A
8	Hybrid Black Poplar	570	21					6.75	2.5#	4.25	Early Mature	Average	Indifferent	Partially obscured by bramble, unable to thoroughly inspect Unremarkable example of species	C1	6.9
9	Ash	680 310	16					9.5	1.5	0.5	Early Mature	Average	Indifferent	Slightly sparse crown for species Impact wound on eastern aspect of trunk at c.1.5m Sub dominant stem at c.0.5m Appears to have been previously managed in height Moderate example of species	B12	9
10	English Oak	655	16	4	9.5#	6	1#		3.5	3	Early Mature	Average	Indifferent	Suppressed on western aspect by G12 Sub dominant stem at c.2m, fused at c.2.5m and again at c.3.75m Crown and scaffold structure biased east Individually of low significance, conferred moderate value as component of wider collective	B2	7.8
11	English Oak	400 550 575 #	18	7#	10#	5#	10		4#	3.75	Early Mature	Average	Indifferent	Partially obscured by bramble, unable to thoroughly inspect Stem inaccessible due to dense understory Mutually suppressed and cohesive with companions Prominent boundary feature	B2	10.8
12	Hybrid Black Poplar	680	16					6	3	1.5	Early Mature	Average	Hazardous	Previously topped at c.4m Large cavity with extensive decay in trunk from ground level to c.4.5m Hazardous structural condition, unsuitable for retention	U	N/A
13	Ash	490	14	6.5	6.75	6.5	7.75		3.75	3.75	Early Mature	Average	Indifferent	Cohesive with T14 Unsympathetic pruning to lower crown Exposed and scalped surface roots to south Individually of low significance, conferred moderate value as component of wider collective	B2	6
14	English Oak	590 530	14	10#	8.5	7.5	6.5		2.5	2	Early Mature	Average	Indifferent	Bifurcates at c.1.5m, union appears sound Cohesive with T13 Moderate example of species	B12	9.6

Tree Number	Common Species Name	Trunk Diameter (mm)	Height (m)	Crown Spread (m) N	E	S	W	Radial	First Significant Branch (m)	Crown Clearance (m)	Life Stage	Physiological Condition	Structural Condition	Comments	BS5837 Category	RPA Radius (m)
15	English Oak	1000#	20	11#	12#	11.5	13		4#	4	Mature	Average	Indifferent	Clad and obscured by Ivy, unable to thoroughly inspect Stem inaccessible due to dense understory Upper crown appears slightly sparse Multi stemmed from c.3.5m Moderate example of species	B12	12
16	Field Maple	2*300#	16	6#	7#	4#	7		1.5#	1.75	Early Mature	Average	Indifferent	Clad and obscured by Ivy, unable to thoroughly inspect Stem inaccessible due to dense understory Appears to bifurcate at c.1.5m Unremarkable example of species	C1	5.1
17	Field Maple	2*320#	12	8#	6#	5#	7.5		1#	1.75	Early Mature	Average	Indifferent	Mutually suppressed and cohesive with companions Unremarkable example of species	C1	5.4
18	English Oak	880	18	11	11#	9.25	12		2.5	3	Mature	Average	Indifferent	Historic storm damage to upper crown Snapped branch hung up in crown Cohesive with T19 Moderate example of species	B12	10.5
19	English Oak	1090	20	10	12#	12.75	12.5		1.75	3	Mature	Average	Indifferent	Cohesive with T18 Minor pruning to western aspect of lower crown to crown lift Prominent boundary feature	A2	13.2
20	White Willow	400 150 #	11	6	5.25	5	6.5		3#	0.5	Early Mature	Average	Indifferent	Partially obscured by bramble, unable to thoroughly inspect Stem inaccessible due to dense understory Sub dominant stem at c.0.5m Unremarkable example of species	C1	5.1
21	Hybrid Black Poplar	4*350 190 oi	20	5	7	6#	5		3	1	Early Mature	Average	Indifferent	Clad and obscured by Ivy, unable to thoroughly inspect Multi stemmed from ground level, union obscured by vegetation Unremarkable example of species	C1	8.7
22	Hybrid Black Poplar	1010 oi	22	11.5	7.75	6.75	9		4	3.75	Mature	Average	Indifferent	Clad and obscured by Ivy, unable to thoroughly inspect Partially obscured by bramble Stem inaccessible due to dense understory Multi stemmed from c.4m, likely to have been previously topped Prominent within moderate distance views	B2	12
23	Hybrid Black Poplar	510 oi at c.1m	16	9.25	4.25	0.5	5		4	4	Early Mature	Average	Indifferent	Clad and obscured by Ivy, unable to thoroughly inspect Partially obscured by bramble Suppressed by T22 Previously topped at c.4m Crown biased north Unremarkable example of species	C1	6

Tree Number	Common Species Name	Trunk Diameter (mm)	Height (m)	Crown Spread (m) N	E	S	W	Radial	First Significant Branch (m)	Crown Clearance (m)	Life Stage	Physiological Condition	Structural Condition	Comments	BS5837 Category	RPA Radius (m)
24	Sweet Chestnut	230 2*130 290 240 330 2*400#	14	8#	5.5	7.5	9		4	4	Mature	Average	Indifferent	Average internal deadwood with large diameter in lower crown Multi stemmed from c.0.5m, likely to have been historically coppiced Two primary stems fused from c.1.5m to c.4m Mutually suppressed and cohesive with companion shelter Moderate collective value	B2	9
25	Sweet Chestnut	620 oi	14	7.5	6.25	7	6		3.5	4#	Early Mature	Average	Indifferent	Area of bark delamination to southern aspect of trunk from ground level to c.3.5m Moderate collective value	B2	7.5
26	Sweet Chestnut	850	14	7#	4.5	9.25	6		3.5	15	Mature	Average	Indifferent	Squat crown form Average internal deadwood with large diameter in lower crown Establishing basal stems to north and south Cavity within scaffold limb at c.5m Leans south from ground level Moderate example of species	B12	10.2
27	Sweet Chestnut	720	14	8.25	7#	9	6		2	2	Early Mature	Below Average	Poor	Above average internal deadwood Sparse crown for species Leans south from ground level Mutually suppressed and cohesive with companions Scaffold limb to east crossing and rubbing on scaffold limb of T28 Large diameter deadwood throughout Reduced future potential	C1	8.7
28	Sweet Chestnut	610	15	6.25	3	6#	5		6#	6#	Early Mature	Above Average	Indifferent	Clad and obscured by Ivy, unable to thoroughly inspect Stem inaccessible due to dense understory Average internal deadwood with large diameter in lower crown Mutually suppressed and cohesive with companions Unremarkable example of species	C1	7.2
29	Sweet Chestnut	580 oi	12	9.25	4.5	1#	3.5		4.5	2	Early Mature	Average	Poor	Clad and obscured by Ivy, unable to thoroughly inspect Stem inaccessible due to dense understory Average internal deadwood with large diameter in lower crown Suppressed by companions Crown and scaffold structure biased north Unremarkable example of species	C1	6.9
30	Sweet Chestnut	440 oi	15	6.5	4	7#	6.5		7.75	7	Early Mature	Average	Indifferent	Clad and obscured by Ivy, unable to thoroughly inspect Stem inaccessible due to dense understory Etiolated form Mutually suppressed and cohesive with companion shelter Individually of low significance, conferred moderate value as component of wider collective	B2	5.4

Tree Number	Common Species Name	Trunk Diameter (mm)	Height (m)	Crown Spread (m) N	E	S	W	Radial	First Significant Branch (m)	Crown Clearance (m)	Life Stage	Physiological Condition	Structural Condition	Comments	BS5837 Category	RPA Radius (m)
31	Sweet Chestnut	750#	15	4.5	6#	6#	6.75		2.75#	8.5	Early Mature	Below Average	Poor	Partially obscured by bramble, unable to thoroughly inspect Stem inaccessible due to dense understory Above average internal deadwood Sparse crown for species Dieback to upper crown In a state of terminal decline, unlikely to offer a long-term future contribution	U	N/A
32	Sweet Chestnut	600#	15#	0.5#	4#	8#	5#		4#	6#	Early Mature	Average	Poor	Partially obscured by bramble, unable to thoroughly inspect Stem inaccessible due to dense understory Leans south from ground level Suppressed by companions Low arboricultural quality	C1	7.2
33	Sweet Chestnut	720 oi	15	8	11	8#	5#		6	2	Early Mature	Below Average	Hazardous	Clad and obscured by Ivy, unable to thoroughly inspect Above average internal deadwood Dieback to upper crown Bark delamination to northern and eastern aspects of trunk Extensive decay within trunk Leans east from ground level Hazardous structural condition, unsuitable for retention	U	N/A
34	Sweet Chestnut	870 oi at c.1m	14	7.5	6.25	7#	5		1.5	2	Mature	Average	Indifferent	Clad and obscured by Ivy, unable to thoroughly inspect Stem inaccessible due to dense understory Low crown break Suspected cavity within central leader at c.7m Multiple tear out wounds within crown Mutually suppressed and cohesive with companions Unremarkable example of species	C1	10.5
35	Sweet Chestnut	740 oi	13	5.5	6#	7#	5.5		3#	3	Early Mature	Below Average	Indifferent	Clad and obscured by Ivy, unable to thoroughly inspect Sparse crown for species Dead sub dominant stem to north Unremarkable example of species	C1	9
36	Ash	440 oi	15	5.75	6.75	7#	3#		3	2	Early Mature	Average	Indifferent	Clad and obscured by Ivy, unable to thoroughly inspect Mutually suppressed and cohesive with companions Unremarkable example of species	C1	5.4
37	Sweet Chestnut	1400 oi	15	7	10.25	8#	9		6	6.5	Mature	Average	Indifferent	Clad and obscured by Ivy, unable to thoroughly inspect Sparse crown for species Average internal deadwood with large diameter in lower crown Bifurcates at c.1.75m, union tight and fused to c.4m Prominent within views from roadside Moderate example of species	B12	15

Tree Number	Common Species Name	Trunk Diameter (mm)	Height (m)	Crown Spread (m) N	E	S	W	Radial	First Significant Branch (m)	Crown Clearance (m)	Life Stage	Physiological Condition	Structural Condition	Comments	BS5837 Category	RPA Radius (m)
38	Red Oak	520	14					7	2.5	2.5	Early Mature	Average	Indifferent	Average internal deadwood with large diameter in lower crown Prominent within views from roadside Moderate example of species	B12	6.3
39	Goat Willow	3*300 5*250 #	12					7.5	0.5	0 5	Early Mature	Average	Indifferent	Stem inaccessible due to boundary fence Previously managed in height Situated on site boundary Unremarkable example of species	C1	9
40	Hybrid Black Poplar	350 300 325 280 240 #	15#	12	10.5	6#	10		3.5	2.5	Early Mature	Below Average	Poor	Partially obscured by bramble, unable to thoroughly inspect Stem inaccessible due to dense understory Multi stemmed from ground level 3no stems lean heavily to north and east over footpath Low arboricultural quality	C1	8.1
41	English Oak	780	15	10.5	9	9#	10#		2.5	3.5	Mature	Average	Indifferent	Situated to west of ditch Area of bark delamination and decay on northern and eastern aspects of base Black Rhizomorph/Bootlaces under bark, indicating presence of *Armillaria ssp.* Slight lean east towards nearby school Recommend PiCUS investigation to determine extent of dysfunctional wood with full review of category upon results Moderate example of species	B12	9.3
42	Cherry	660	12	5.25	5#	5.5	4		3	7.5	Mature	Below Average	Indifferent	Etiolated form Previously managed in height Previous unsympathetic lower limb removals Low arboricultural quality	C1	7.8
43	Norway Maple	400#	12					6.5	2.5#	2.5#	Early Mature	Average	Indifferent	Partially obscured by bramble, unable to thoroughly inspect Tear out wound within lower crown Unremarkable example of species	C1	4.8
44	Hybrid Black Poplar	800#	22#					10.5	4#	2	Mature	Average	Indifferent	Clad and obscured by Ivy, unable to thoroughly inspect Partially obscured by bramble Prominent within moderate distance views	B2	9.6
45	Horse Chestnut	370#	9					3	3	3	Semi Mature	Below Average	Indifferent	Clad and obscured by Ivy, unable to thoroughly inspect Structure appears typical for species within current context Unremarkable example of species	C12	4.5

Tree Number	Common Species Name	Trunk Diameter (mm)	Height (m)	Crown Spread (m) N	E	S	W	Radial	First Significant Branch (m)	Crown Clearance (m)	Life Stage	Physiological Condition	Structural Condition	Comments	BS5837 Category	RPA Radius (m)
46	Eucalyptus	450#	14	5.5	6	7#	5#		6	6.5	Early Mature	Average	Indifferent	Clad and obscured by Ivy, unable to thoroughly inspect Structure appears typical for species within current context Unremarkable example of species	C1	5.4
47	Sycamore	450#	13					5	4#	4#	Early Mature	Average	Indifferent	Clad and obscured by Ivy, unable to thoroughly inspect Stem inaccessible due to dense understory Multi stemmed from c.4m Unremarkable example of species	C1	5.4
48	Swamp Cypress	500#	17					6	4#	4#	Early Mature	Average	Indifferent	Stem inaccessible due to dense understory Appears to be offsite Structure appears typical for species within current context Moderate example of species	B1	6
49	Silver Birch	400#	15					5	5#	5#	Early Mature	Average	Indifferent	Clad and obscured by Ivy, unable to thoroughly inspect Stem inaccessible due to dense understory Structure appears typical for species within current context Bifurcates at c.6m Unremarkable example of species	C1	4.8
50	Scots Pine	700#	17					6.5	10#	7.25	Early Mature	Average	Indifferent	Clad and obscured by Ivy, unable to thoroughly inspect Appears to bifurcate at c.5m Prominent within internal views	B2	8.4
51	Scots Pine	430 oi	9	7	7	4.5	2		6	3	Early Mature	Average	Poor	Clad and obscured by Ivy, unable to thoroughly inspect Suppressed by T50 Unsympathetic pruning to clear overhead utilities to north Crown biased north Unremarkable example of species	C1	5.1
52	Honey Locust	330 390 oi	11	7.5	6#	7.75	7.25		2.5	3	Early Mature	Average	Poor	Clad and obscured by Ivy, unable to thoroughly inspect Bifurcates at c.1.5m, union obscured by Ivy Unsympathetic pruning to clear from overhead utilities Reduced future potential due to close proximity to overhead utilities and continuous pressure for pruning	C1	6
53	Willow-Leaved Pear	300 oi	6	4.25	3.5	3	3.25		4	0.5	Early Mature	Average	Indifferent	Clad and obscured by Ivy, unable to thoroughly inspect Stem inaccessible due to dense understory Structure appears typical for species within current context Unremarkable example of species	C1	3.6
54	Katsura	270#	9					4	3#	3#	Semi Mature	Average	Indifferent	Stem inaccessible due to dense understory Structure appears typical for species within current context Unremarkable example of species	C1	3.3

Tree Number	Common Species Name	Trunk Diameter (mm)	Height (m)	Crown Spread (m)					First Significant Branch (m)	Crown Clearance (m)	Life Stage	Physiological Condition	Structural Condition	Comments	BS5837 Category	RPA Radius (m)
				N	E	S	W	Radial								
55	Hornbeam	340#	13					5	1.5	1.5	Early Mature	Average	Indifferent	Structure typical for species within current context Situated on roadside verge Moderate example of species	B12	4.2
56	Sweet Chestnut	3*350 2*200 #	13					4	3	2	Early Mature	Average	Indifferent	Clad and obscured by Ivy, unable to thoroughly inspect Situated on roadside verge Multi stemmed from ground level Structure appears typical for species within current context Moderate example of species	B12	8.1
57	Hybrid Black Poplar	800#	21	5#	9#	13#	6#		1.5	1.25	Early Mature	Average	Indifferent	Surveyed from a distance Previously topped Scaffold structure biased south Prominent within moderate distance views	B2	9.6
58	Cotoneaster	180 2*100 #	6	3#	5	4#	0.5#		1.5	1.75	Semi Mature	Average	Poor	Inaccessible, offsite within neighbouring residential land, unable to thoroughly inspect Unremarkable example of species	C12	2.7
59	Narrow Leaved Ash	120#	6					2	2	2	Semi Mature	Below Average	Indifferent	Minor tip dieback throughout Unremarkable example of species	C12	1.5
60	Narrow Leaved Ash	130#	7					2	2	2	Semi Mature	Below Average	Indifferent	Minor tip dieback throughout Sparse crown for species Unremarkable example of species	C12	1.5
61	Narrow Leaved Ash	130#	7					2.5	2	2	Semi Mature	Below Average	Indifferent	Minor tip dieback throughout Sparse crown for species Unremarkable example of species	C12	1.5
62	Lime	250#	12					3.5	1.5	1.25	Early Mature	Average	Indifferent	Structure appears typical for species within current context Moderate example of species	B1	3
63	Hornbeam	160#	6					2.5	2.5	2.5	Semi Mature	Average	Indifferent	Structure appears typical for species within current context Unremarkable example of species	C12	1.8
64	Hornbeam	160#	5					2	2.5	2	Semi Mature	Average	Indifferent	Structure appears typical for species within current context Unremarkable example of species	C12	1.8

Tree Number	Common Species Name	Trunk Diameter (mm)	Height (m)	Crown Spread (m)					First Significant Branch (m)	Crown Clearance (m)	Life Stage	Physiological Condition	Structural Condition	Comments	BS5837 Category	RPA Radius (m)
				N	E	S	W	Radial								
G1	Ash Buddleia Hawthorn Hornbeam Hybrid Black Poplar Leyland Cypress Sycamore Beech Goat Willow	700# max	23 max					8 max	2 to 8	1.5 to 8	Semi Mature to Early Mature	Average to Below Average	Indifferent to Poor	Limited access due to dense understory Components predominantly clad and obscured by Ivy, unable to thoroughly inspect Occasionally intermittent collection set within railway embankment Individually of low significance, moderate value as collective only	B2	8.4
G2	Ash Cherry Cotoneaster English Oak Sycamore	100 av	5 av					2 av	1 av	1 av	Semi Mature	Average	Indifferent	Parcels of scrub Unremarkable collection	C12	1.2
G3	Goat Willow Sycamore	3*120 av	12 av					4.5 av	1 av	5 av	Semi Mature to Early Mature	Average to Below Average	Indifferent to Poor	Limited access due to dense understory Partially clad and obscured by Bramble Cohesive linear collection Components predominantly display multi stemmed form Occasional dead component within interior Unremarkable collection	C12	2.4
G4	Elder Hawthorn Leyland Cypress Sycamore Alder	370 av	9 av					2.5 av	0.5 av	0.5 av	Semi Mature to Early Mature	Average to Below Average	Indifferent to Poor	Components predominantly clad and obscured by Ivy, unable to thoroughly inspect Maintained on lower canopies to c.4m Unremarkable collection	C12	4.5
G5	Ash English Oak Hawthorn Holly Sycamore Cherry Silver Birch Hazel	600# av	19 av					8 av	2 av	2 av	Semi Mature to Mature	Average to Below Average	Indifferent to Poor	Components predominantly clad and obscured by Ivy, unable to thoroughly inspect Partially clad and obscured by Bramble Offsite collection set within railway embankment Ash components appear to be in decline Occasionally encroaches onto site Occasionally intermittent Individually of low significance, moderate value as collective only	B2	7.2

Tree Number	Common Species Name	Trunk Diameter (mm)	Height (m)	Crown Spread (m) N	E	S	W	Radial	First Significant Branch (m)	Crown Clearance (m)	Life Stage	Physiological Condition	Structural Condition	Comments	BS5837 Category	RPA Radius (m)
G6	Cherry Laurel Elaeagnus Eucalyptus Fig Norway Maple Plum Silver Birch Viburnum Mimosa Box elder Contorted Willow Hazel Weeping Birch Indian Bean Tree Himalayan Birch Cherry Purple Plum	300# av	12 av					5 av	1 av	1 av	Semi Mature to Early Mature	Average to Below Average	Indifferent to Poor	Limited access due to dense understory Components predominantly clad and obscured by Ivy, unable to thoroughly inspect Partially clad and obscured by Bramble Intermittent collection of ornamental plantings and self set scrub Unremarkable collection	C12	3.6
G7	Beech Hornbeam Elm English Oak	300 av	12 av					3.5 av	1 av	1 av	Semi Mature to Early Mature	Average	Indifferent	Liner collection of lapsed ornamental hedgerow components Previously maintained at c.2.5m Occasional self set specimen within Unremarkable collection	C12	3.6
G8	Leyland Cypress	300 av	11 av					4 av	0.5 av	0.5 av	Semi Mature	Average	Indifferent	Components predominantly clad and obscured by Ivy, unable to thoroughly inspect Maintained on lower canopies to c.4m Occasional failed stem within collection Unremarkable collection	C12	3.6
G9	Goat Willow Hybrid Black Poplar	2*750# max	20 av					7 av	1 av	1 av	Semi Mature to Early Mature	Average to Below Average	Indifferent to Poor	Components predominantly clad and obscured by Ivy, unable to thoroughly inspect Partially clad and obscured by Bramble Cohesive collection majoring on Hybrid Black Poplar with self set scrub understory Unremarkable collection	C12	12.6
G10	Ash Buddleia Cherry English Oak Hawthorn Holly Sycamore Silver Birch Hazel Crack Willow	300# av	13 av					4 av	1# av	1# av	Semi Mature to Early Mature	Average to Below Average	Indifferent to Poor	Inaccessible, offsite within adjacent third-party land, unable to thoroughly inspect Structures appear typical for species within current context Majority of group is homogonous in size, structure and life stage Cohesive collection situated on railway embankment Unremarkable collection	C12	3.6

Tree Number	Common Species Name	Trunk Diameter (mm)	Height (m)	Crown Spread (m) N	E	S	W	Radial	First Significant Branch (m)	Crown Clearance (m)	Life Stage	Physiological Condition	Structural Condition	Comments	BS5837 Category	RPA Radius (m)
G11	Blackthorn Buddleia Crack Willow Elder False Acacia Goat Willow Silver Birch	120 av	5 av					3 av	0.5 av	0.5 av	Semi Mature	Average to Below Average	Indifferent	Intermittent collection of scrub Unremarkable collection	C12	1.5
G12	Blackthorn Hawthorn Hazel Hybrid Black Poplar	650 av	22 av					7 av	2 av	1.5 av	Semi Mature to Early Mature	Average	Indifferent to Poor	Limited access due to dense understory Partially clad and obscured by Bramble Mutually suppressed and cohesive forming one single canopy Linear collection of Hybrid Black Poplar with self set understory Majority of components have large cavities with active decay in trunks Collection composed of predominately low value individuals	C12	7.8
G13	Ash	3*350# av	17 max					11 max	2# av	1.5# av	Early Mature	Below Average	Poor	Limited access due to dense understory Components predominantly clad and obscured by Ivy, unable to thoroughly inspect Partially clad and obscured by Bramble Collection of Ash lining site boundary Components appear to be in decline Unremarkable collection	C12	7.2
G14	Ash Blackthorn English Oak Hawthorn Sycamore Bird Cherry	280 170 av	9 max					3.5 av	1.5 av	1.5 av	Semi Mature	Average to Below Average	Indifferent to Poor	Limited access due to dense understory Partially clad and obscured by Bramble Ash components appear to be in decline Occasionally intermittent Unremarkable collection	C12	3.9
G15	Elder Hawthorn Hybrid Black Poplar	450 av	16 av					4 av	2.5 av	2 av	Semi Mature to Early Mature	Average to Below Average	Indifferent to Poor	Limited access due to dense understory Components predominantly clad and obscured by Ivy, unable to thoroughly inspect Partially clad and obscured by Bramble Linear collection of Hybrid Black Poplar with self set scrub understory Majority of Hybrid Black Poplar components have large cavities within extensive decay within trunks	U	N/A
G16	Ash Elder Field Maple Hazel Holly	5*250# max	9 av					6 av	0.5 av	0.5 av	Semi Mature to Early Mature	Average	Indifferent	Limited access due to dense understory Components predominantly clad and obscured by Ivy, unable to thoroughly inspect Cohesive collection lining site boundary Individually of low significance, moderate value as collective only	B2	6.6

Tree Number	Common Species Name	Trunk Diameter (mm)	Height (m)	Crown Spread (m) N	E	S	W	Radial	First Significant Branch (m)	Crown Clearance (m)	Life Stage	Physiological Condition	Structural Condition	Comments	BS5837 Category	RPA Radius (m)
G17	Ash Blackthorn Corkscrew Willow Crack Willow False Acacia Hazel Holly Osier Willow	200 av	9.5 av					3 av	1.5 av	2 av	Semi Mature to Early Mature	Average to Below Average	Indifferent to Poor	Linear collection lining internal access track Occasional failed component within interior Unremarkable collection	C12	2.4
G18	Ash English Oak Hawthorn Hybrid Black Poplar Sycamore	500 av	22 av					7.5 av	2 av	2 av	Semi Mature to Early Mature	Average to Below Average	Indifferent to Poor	Limited access due to dense understory Components predominantly clad and obscured by Ivy, unable to thoroughly inspect Partially clad and obscured by Bramble Linear collection of Hybrid Black Poplars with self set scrub understory Majority of collection appear to have been previously managed in height at c.3m Majority of Hybrid Black Poplar components have large cavities with active decay within trunks Occasional failed component within collection Unremarkable collection	C12	6
G19	Blackthorn Hawthorn Hazel Holly Hybrid Black Poplar	500# av	12 av					3.5 av	2# av	2 av	Semi Mature to Early Mature	Average to Below Average	Indifferent to Poor	Limited access due to dense understory Components predominantly clad and obscured by Ivy, unable to thoroughly inspect Partially clad and obscured by Bramble Linear collection of Hybrid Black Poplars with self set scrub understory Previously maintained in height at c.4 m Majority of Hybrid Black Poplar components have large cavities with active decay within trunks Provides dense boundary screen Unremarkable collection	C12	6
G20	Elder Hawthorn Hybrid Black Poplar	700 av	22 av					8 av	3.5 av	3 av	Early Mature	Average to Below Average	Indifferent to Poor	Offsite collection of Hybrid Black Poplars with self set scrub understory Limited access due to dense understory Components predominantly clad and obscured by Ivy, unable to thoroughly inspect Partially clad and obscured by Bramble Collection lining internal field boundary Structures appear typical for species within current context Mutually suppressed and cohesive forming one single canopy Occasional standing dead within interior Individually of low significance, moderate value as collective only	B2	8.4

Tree Number	Common Species Name	Trunk Diameter (mm)	Height (m)	Crown Spread (m) N	E	S	W	Radial	First Significant Branch (m)	Crown Clearance (m)	Life Stage	Physiological Condition	Structural Condition	Comments	BS5837 Category	RPA Radius (m)
G21	Ash Elder Hawthorn Holly Sweet Chestnut Rowan Silver Birch Cherry Sycamore	200 av	10 av					4 av	2 av	1 av	Young to Semi Mature	Average to Below Average	Indifferent to Poor	Limited access due to dense understory Components predominantly clad and obscured by Ivy, unable to thoroughly inspect Partially clad and obscured by Bramble Occasionally intermittent collection of self set specimens and scrub Occasional failed component within interior Unremarkable collection	C12	2.4
G22	Apple Cherry False Acacia Hawthorn Purple Plum Silver Birch Box Elder	120 av	2 to 9					2 av	1 av	1 av	Young to Semi Mature	Average to Below Average	Indifferent to Poor	Collection of ornamental plantings with occasional self set specimen Unremarkable collection	C12	1.5
G23	Goat Willow Hybrid Black Poplar	75 av	7 av					4 av	0.5 av	0.5 av	Young to Semi Mature	Average	Indifferent	Intermittent parcels of scrub Components predominantly clad and obscured by Ivy, unable to thoroughly inspect Partially clad and obscured by Bramble Structures appear typical for species within current context Unremarkable collection	C12	0.9
G24	Ash Crack Willow False Acacia Norway Maple Sycamore Sweet Chestnut Silver Birch	300 av	13 av					5 av	2 av	2 av	Semi Mature to Early Mature	Average to Below Average	Indifferent to Poor	Limited access due to dense understory Partially clad and obscured by Bramble Intermittent collection of likely self set specimens Occasional failed component within interior Unremarkable collection	C12	3.6
G25	Hybrid Black Poplar Leyland Cypress	350 av	20 av					4 av	5 av	6 av	Semi Mature to Early Mature	Average to Below Average	Indifferent to Poor	Limited access due to dense understory Components predominantly clad and obscured by Ivy, unable to thoroughly inspect Partially clad and obscured by Bramble Cohesive collection majoring on Hybrid Black Poplar Individually of low significance, moderate value as collective only	B2	4.2
G26	Alder Goat Willow	200 av	12 av					4 av	1 av	1 av	Semi Mature	Average	Indifferent	Limited access due to dense understory Structures appear typical for species within current context Linear collection of Alder with occasional self set Goat Willow Unremarkable collection	C12	2.4

Tree Number	Common Species Name	Trunk Diameter (mm)	Height (m)	Crown Spread (m)					First Significant Branch (m)	Crown Clearance (m)	Life Stage	Physiological Condition	Structural Condition	Comments	BS5837 Category	RPA Radius (m)
				N	E	S	W	Radial								
G27	Ash Cherry Laurel Elm English Oak Hawthorn Hazel Norway Maple Sycamore Pittosporum	250 av	12 av					4 av	1.5 av	1.5 av	Semi Mature	Average to Below Average	Indifferent to Poor	Limited access due to dense understory Components predominantly clad and obscured by Ivy, unable to thoroughly inspect Partially clad and obscured by Bramble Occasionally intermittent collection lining PROW Occasional dead component within Unremarkable collection	C12	3
G28	Cherry Elm English Oak Field Maple Hawthorn Hazel Holly Norway Maple 'Crimson king'	650 av	20 av					8 av	3 av	4 av	Semi Mature to Mature	Average	Indifferent to Poor	Limited access due to dense understory Structures appear typical for species within current context Canopies are mutually cohesive Cohesive collection lining both sides of PROW Self set scrub understory High value collection	A2	7.8
G29	Leyland Cypress	450 av	16 av					6 av	0.5 av	0.5 av	Semi Mature to Early Mature	Average to Below Average	Indifferent to Poor	Structures appear typical for species within current context Previously managed in height Maintained on lower canopies to c.4m Limited access due to lower crowns Unremarkable collection	C12	5.4
G30	Ash Apple Cherry Crack Willow Elder Elaeagnus English Oak False Acacia Goat Willow Lonicera Photinia Strawberry Tree Sycamore Silver Birch Viburnum Cherry Laurel Broom Holly Cotoneaster Berberis Buddleia	150# av	9 av					3 av	0.5 av	0.5 av	Young to Semi Mature	Average	Indifferent	Limited access due to dense understory Components predominantly clad and obscured by Ivy, unable to thoroughly inspect Partially clad and obscured by Bramble Area of colonising scrub with occasional ornamental planting Unremarkable collection	C12	1.8

Tree Number	Common Species Name	Trunk Diameter (mm)	Height (m)	Crown Spread (m) N	E	S	W	Radial	First Significant Branch (m)	Crown Clearance (m)	Life Stage	Physiological Condition	Structural Condition	Comments	BS5837 Category	RPA Radius (m)
G31	Elm False Acacia Field Maple Hawthorn Hazel Honey Locust Himalayan Birch Norway Maple Pear Sycamore Silver Birch	2*200 av	14 av					5 av	1.5 av	2 av	Semi Mature to Early Mature	Average to Below Average	Indifferent to Poor	Limited access due to dense understory Partially clad and obscured by Bramble Earth removal works to western aspect of group, likely to have impacted roots Unremarkable collection	C12	3.3
G32	Crack Willow Goat Willow Osier Willow Sycamore Silver Birch Holly Hawthorn	100 av	13 max					3 av	0.5 av	0.5 av	Semi Mature	Average	Indifferent	Limited access due to dense understory Components predominantly clad and obscured by Ivy, unable to thoroughly inspect Partially clad and obscured by Bramble Area of dense scrub Unremarkable collection	C12	1.2
G33	Field Maple Hawthorn Hybrid Black Poplar Sycamore	600 av	22 av					8 av	2 av	1.5 av	Semi Mature to Early Mature	Average	Poor	Limited access due to dense understory Components predominantly clad and obscured by Ivy, unable to thoroughly inspect Partially clad and obscured by Bramble Linear collection of Hybrid Black Poplar lining PROW Previously maintained in height at c.4m Majority of components have large cavities with active decay within trunks Crowns interfering with overhead utilities to north Collection composed of predominately low value individuals	C12	7.2
G34	Field Maple Hazel Silver Birch	75 av	3 av					2 av	0.5 av	0.5 av	Young	Average	Indifferent	Intermittent collection of scrub Unremarkable collection	C12	0.9
G35	Buddleia Elder Honey Locust Horse Chestnut Leyland Cypress Mahonia Bamboo	120 av	6 av					2 av	0.5 av	0.5 av	Semi Mature	Average to Below Average	Indifferent to Poor	Unmaintained collection lining property boundary Unremarkable collection	C12	1.5
G36	Buddleia Elder English Oak Pyracantha Sycamore	4*90 av	7 av					2 av	0.5 av	0.5 av	Semi Mature	Average	Indifferent	Intermittent scrub collection Unremarkable collection	C12	2.1

Tree Number	Common Species Name	Trunk Diameter (mm)	Height (m)	Crown Spread (m) N	E	S	W	Radial	First Significant Branch (m)	Crown Clearance (m)	Life Stage	Physiological Condition	Structural Condition	Comments	BS5837 Category	RPA Radius (m)
G37	Beech Elaeagnus Hawthorn Hazel Holly Hornbeam Horse Chestnut Mahonia Pyracantha Sycamore Silver Birch Viburnum Berberis Camelia	75 av	4 av					1.5 av	0.5 av	0.5 av	Semi Mature	Average	Indifferent	Offsite collection of established ornamental scrub Occasional larger specimen within Unremarkable collection	C12	0.9
G38	Hybrid Black Poplar	500# av	21 av					8 av	6# av	6# av	Early Mature	Average	Indifferent	Inaccessible, offsite within neighbouring residential land, unable to thoroughly inspect 2no Hybrid Black Poplars, crowns are mutually suppressed and cohesive Moderate collective value	B2	6
G39	Sycamore Hawthorn Blackthorn Ash	150# av 300# max	3 av 9 max					3 av	0.5 av	0.5 av	Young to Early Mature	Average	Indifferent	Stems inaccessible due to dense understory Cohesive collection of scrub and occasional established Sycamore within Unremarkable collection	C12	1.8 av 3.6 max

Tree Number	Common Species Name	Trunk Diameter (mm)	Height (m)	Crown Spread (m)					First Significant Branch (m)	Crown Clearance (m)	Life Stage	Physiological Condition	Structural Condition	Comments	BS5837 Category	RPA Radius (m)
				N	E	S	W	Radial								
H1	Blackthorn Cherry Cherry Plum English Oak Goat Willow Hawthorn Holly Rowan Viburnum Cotoneaster Holm Oak Berberis	75 av	2 to 6					2 av	0.5 av	0.5 av	Semi Mature	Average	Indifferent	Partially maintained internal hedgerow Occasional self set larger specimen within Unremarkable collection	C12	0.9
H2	Alder Crack Willow False Acacia Field Maple Goat Willow Hazel Lonicera Silver Birch	75 av	5 av					3 av	0.5 av	0.5 av	Young to Semi Mature	Average to Below Average	Indifferent to Poor	Unmaintained boundary hedgerow Unremarkable collection	C12	0.9
H3	Blackthorn Cherry English Oak Field Maple Hawthorn Hazel Larch Rowan Silver Birch Lime	75 av	6 av					3 av	0.5 av	0 5 av	Young to Semi Mature	Average to Below Average	Indifferent to Poor	Components predominantly clad and obscured by Ivy, unable to thoroughly inspect Partially clad and obscured by Bramble Unmaintained hedgerow lining site boundary Inaccessible due to boundary fence Provides partial screening of adjacent dwellings Occasionally intermittent Unremarkable collection	C12	0.9
H4	Leyland Cypress	140# av	4 av					1.5 av	0.5 av	0.5 av	Semi Mature	Average to Below Average	Indifferent	Components predominantly clad and obscured by Ivy, unable to thoroughly inspect Previously maintained hedgerow Occasional component partially dead Unremarkable collection	C12	1.8

APPENDIX D

TREE CONSTRAINTS PLAN (12072 TCP 01)

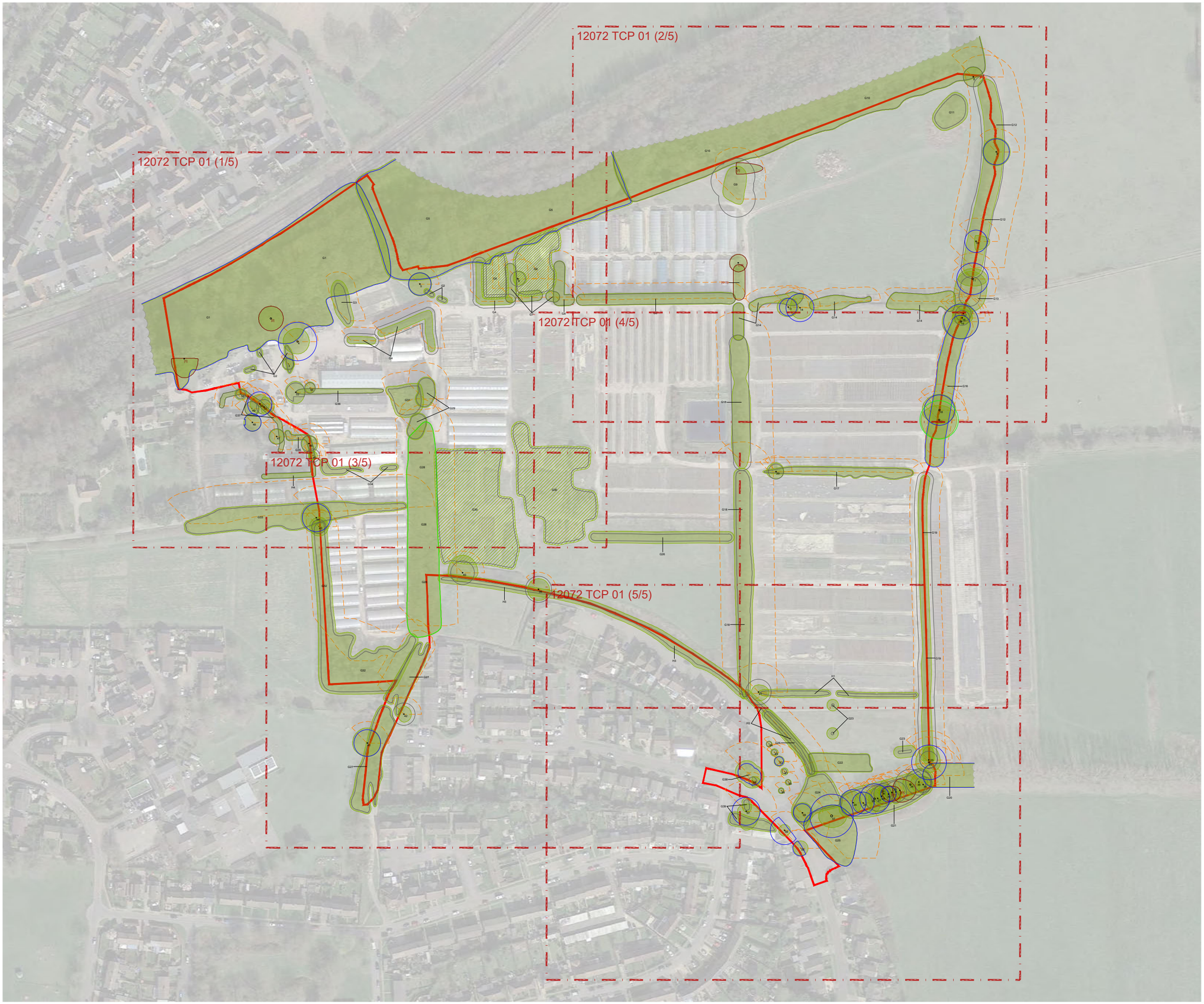

1:2500 @ A3

0m 20m 40m 100m

KEY:

- Site Boundary
- 15 Tree Numbers
- Tree Canopies
- [8] Category 'U' Trees
- Category 'A' RPA
- Category 'B' RPA
- Category 'C' RPA
- Shading Arc

Note: Trees 1, 16, 17, 23, 32, 36-39, 41, 42, Groups G1-G3, G5-G7, G10, G11, G14, G16, G17, G19-G21, G23-G27, G30, G32-G34 and Hedgerows H1-H3 have been plotted using measurements onsite in conjunction with aerial imagery. Their locations were not recorded on the topographical survey of the site.

Note: The RPA footprint for Trees 48, 52, 55 & 56 have been displaced to allow for the effect of the adopted highway. The surface area of the RPA has not been reduced.

REV	DATE	NOTE	Drawn	Chk'd

REVISIONS

aspect arboriculture

TITLE

New Place Farm, Pulborough
Tree Constraints Plan

CLIENT

David Wilson Homes, Southern Counties

SCALE	DATE	DRAWN
1:2500 @ A3	APR 2024	GW

DRAWING NUMBER	REVISION
12072 TCP 01 (Overview)	

Based on: S1572-02-03-04.dwg

1:1000 @ A3

0m 10m 20m 40m

KEY:

- Site Boundary
- 15 Tree Numbers
- Tree Canopies
- [8] Category 'U' Trees
- Category 'A' RPA
- Category 'B' RPA
- Category 'C' RPA
- Shading Arc

Note: Trees 1, 16, 17, 23, 32, 36-39, 41, 42, Groups G1-G3, G5-G7, G10, G11, G14, G16, G17, G19-G21, G23-G27, G30, G32-G34 and Hedgerows H1-H3 have been plotted using measurements onsite in conjunction with aerial imagery. Their locations were not recorded on the topographical survey of the site.

Note: The RPA footprint for Trees 48, 52, 55 & 56 have been displaced to allow for the effect of the adopted highway. The surface area of the RPA has not been reduced.

REV	DATE	NOTE	Drawn	Chk'd

REVISIONS

aspect arboriculture

TITLE

New Place Farm, Pulborough
Tree Constraints Plan

CLIENT

David Wilson Homes, Southern Counties

SCALE	DATE	DRAWN
1:1000 @ A3	APR 2024	GW

DRAWING NUMBER	REVISION
12072 TCP 01 (1/5)	

Based on: S1572-02-03-04.dwg

1:1000 @ A3

0m 10m 20m 40m

KEY:

- Site Boundary
- 15 Tree Numbers
- Tree Canopies
- [8] Category 'U' Trees
- Category 'A' RPA
- Category 'B' RPA
- Category 'C' RPA
- Shading Arc

Note: Trees 1, 16, 17, 23, 32, 36-39, 41, 42, Groups G1-G3, G5-G7, G10, G11, G14, G16, G17, G19-G21, G23-G27, G30, G32-G34 and Hedgerows H1-H3 have been plotted using measurements onsite in conjunction with aerial imagery. Their locations were not recorded on the topographical survey of the site.

Note: The RPA footprint for Trees 48, 52, 55 & 56 have been displaced to allow for the effect of the adopted highway. The surface area of the RPA has not been reduced.

Crown Boundary Copyright Cyclomedia

REV	DATE	NOTE	Drawn	Chk'd

REVISIONS

aspect arboriculture

TITLE

New Place Farm, Pulborough
Tree Constraints Plan

CLIENT

David Wilson Homes, Southern Counties

SCALE	DATE	DRAWN
1:1000 @ A3	APR 2024	GW

DRAWING NUMBER	REVISION
12072 TCP 01 (2/5)	

Based on: S1572-02-03-04.dwg

1:1000 @ A3

0m 10m 20m 40m

KEY:

- Site Boundary
- 15 Tree Numbers
- Tree Canopies
- [8] Category 'U' Trees
- Category 'A' RPA
- Category 'B' RPA
- Category 'C' RPA
- Shading Arc

Note: Trees 1, 16, 17, 23, 32, 36-39, 41, 42, Groups G1-G3, G5-G7, G10, G11, G14, G16, G17, G19-G21, G23-G27, G30, G32-G34 and Hedgerows H1-H3 have been plotted using measurements onsite in conjunction with aerial imagery. Their locations were not recorded on the topographical survey of the site.

Note: The RPA footprint for Trees 48, 52, 55 & 56 have been displaced to allow for the effect of the adopted highway. The surface area of the RPA has not been reduced.

Crown Copyright Google Earth

REV	DATE	NOTE	Drawn	Chk'd

REVISIONS

aspect arboriculture

TITLE

New Place Farm, Pulborough
Tree Constraints Plan

CLIENT

David Wilson Homes, Southern Counties

SCALE	DATE	DRAWN
1:1000 @ A3	APR 2024	GW

DRAWING NUMBER	REVISION
12072 TCP 01 (3/5)	

Based on: S1572-02-03-04.dwg

1:1000 @ A3

0m 10m 20m 40m

KEY:

- Site Boundary
- 15 Tree Numbers
- Tree Canopies
- [8] Category 'U' Trees
- Category 'A' RPA
- Category 'B' RPA
- Category 'C' RPA
- Shading Arc

Note: Trees 1, 16, 17, 23, 32, 36-39, 41, 42, Groups G1-G3, G5-G7, G10, G11, G14, G16, G17, G19-G21, G23-G27, G30, G32-G34 and Hedgerows H1-H3 have been plotted using measurements onsite in conjunction with aerial imagery. Their locations were not recorded on the topographical survey of the site.

Note: The RPA footprint for Trees 48, 52, 55 & 56 have been displaced to allow for the effect of the adopted highway. The surface area of the RPA has not been reduced.

REV	DATE	NOTE	Drawn	Chk'd

REVISIONS

aspect arboriculture

TITLE

New Place Farm, Pulborough
Tree Constraints Plan

CLIENT

David Wilson Homes, Southern Counties

SCALE	DATE	DRAWN
1:1000 @ A3	APR 2024	GW

DRAWING NUMBER	REVISION
12072 TCP 01 (4/5)	

Based on: S1572-02-03-04.dwg

1:1000 @ A3

0m 10m 20m 40m

KEY:

- Site Boundary
- 15 Tree Numbers
- Tree Canopies
- [8] Category 'U' Trees
- Category 'A' RPA
- Category 'B' RPA
- Category 'C' RPA
- Shading Arc

Note: Trees 1, 16, 17, 23, 32, 36-39, 41, 42, Groups G1-G3, G5-G7, G10, G11, G14, G16, G17, G19-G21, G23-G27, G30, G32-G34 and Hedgerows H1-H3 have been plotted using measurements onsite in conjunction with aerial imagery. Their locations were not recorded on the topographical survey of the site.

Note: The RPA footprint for Trees 48, 52, 55 & 56 have been displaced to allow for the effect of the adopted highway. The surface area of the RPA has not been reduced.

REV	DATE	NOTE	Drawn	Chk'd

REVISIONS

aspect arboriculture

TITLE

New Place Farm, Pulborough
Tree Constraints Plan

CLIENT

David Wilson Homes, Southern Counties

SCALE	DATE	DRAWN
1:1000 @ A3	APR 2024	GW

DRAWING NUMBER	REVISION
12072 TCP 01 (5/5)	

Based on: S1572-02-03-04.dwg

APPENDIX E

TREE PROTECTION BARRIER SPECIFICATION

Recommended Tree Protection Fencing Specification for this Development

(Source: BS 5837: 2012)

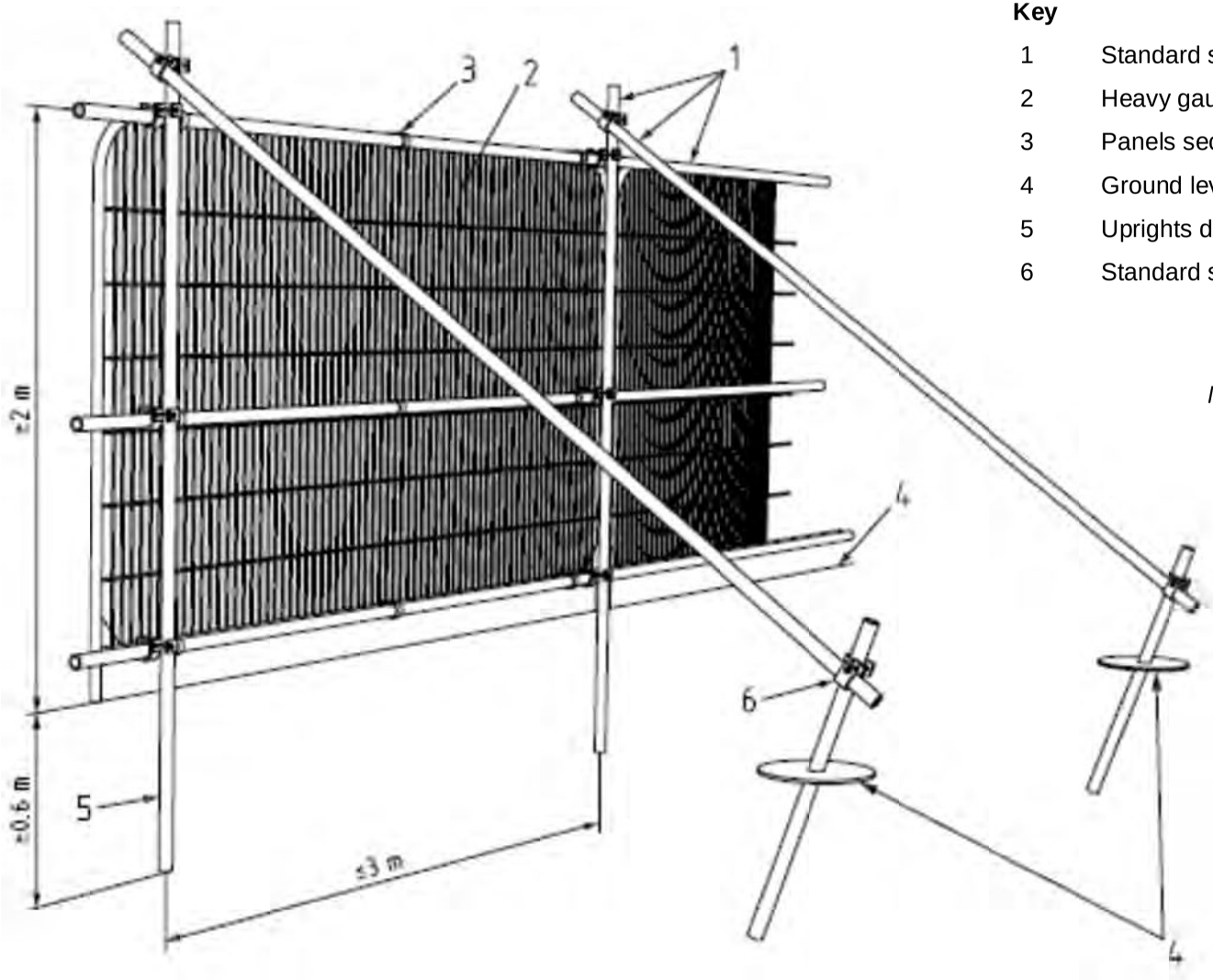

Key

1	Standard scaffold poles
2	Heavy gauge 2m tall galvanized tube and welded mesh infill panels
3	Panels secured to uprights and cross-members with wire ties
4	Ground level
5	Uprights driven into the ground until secure (minimum depth 0.6m)
6	Standard scaffold clamps

Notes:

- *Supports are to be sited tree side of the panel front face.*
- *All weather notices should be attached to every fourth panel highlighting the importance of the barrier in its correct position. An example is provided overleaf which may be duplicated for use on this development.*

aspect arboriculture

Tree Protection Barrier Specification

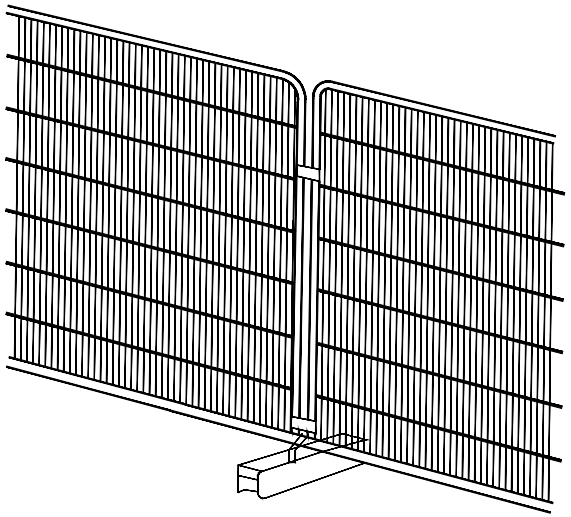

Heras panels supported with pinned rubber feet and driven 100x100mm timber posts on every second panel.

aspect arboriculture

TREE PROTECTION BARRIER

- **DO NOT MOVE THIS FENCE**
- **NO SITE ACTIVITY TREE SIDE OF FENCE**
- **NO STORAGE TREE SIDE OF FENCE**

- **For assistance call Aspect Arboriculture: 01295 276066**

aspect arboriculture

landscape planning • ecology • arboriculture

aspect

Aspect Arboriculture Ltd
South Court
Hardwick Business Park
Noral Way
Banbury
Oxfordshire OX16 2AF

T: 01295 276066
F: 01295 265072
E: info@aspect-arbor.com
W: www.aspect-arbor.com

Appendix 4404/3:

Reptile Toolbox Talk

Toolbox Talk

Project: Land at New Place Farm, Pullborough, West Sussex

Reptile Guidance for Destructive Searches

Date: August 2026

1. Legal Protection

1.1. There are six species of reptile in Britain, all of which are listed under Schedule 5 of the Wildlife and Countryside Act 1981 (as amended), which protects individuals against intentional killing or injury. Sand Lizard *Lacerta agilis* and Smooth Snake *Coronella austriaca* receive additional protection under the Conservation of Habitats and Species Regulations 2017.

2. Identification of Reptiles

The key identification features of British reptile species likely to be encountered during works are detailed below.

Common Lizards are a small, fast moving lizard growing up to 16cm in length. They are usually grey brown to dark brown in colour, often with a darker streak or speckles that may run down the length of the spine. A continuous Dark band bordered by light yellow or white spots is often seen on either side of their bodies and the underside of males is yellow or orange with black spots, while the underside of females is yellowish grey. Young Common Lizards are very dark brown or black. This species is able to drop their tail and so may be found as such.

Slow Worms are a slow moving legless lizard, growing up to 40-45cm in length. Due to their body shape, they are often confused with snakes. Adult males are often uniformly light brown to dark brown in colour, whereas both females and their young often have darker sides and a characteristic black line that runs along their spine. Young Slow Worms are also lighter in colour and are usually golden brown. This species is able to drop their tail and so may be found as such.

Grass Snakes are non-venomous, are very good swimmers and often hunt in water. Adults can reach up to 80-100cm in length. Grey-green in colour with a cream, yellow or light green belly. Distinctive yellow and black collar behind the head. Dark markings along the side and belly. Circular pupil.

Britain's only venomous snake, with a distinct dark zig-zag pattern along the back. Adults can reach up to 70cm in length. Quite variable in colour, males typically have black markings against and off-white background, whilst females typically have brown markings against a light brown background. Vertical pupil like a cat's eye.	

3. Where You Might Find Them

3.1. Over winter reptiles hibernate, often in communal groups, and can be found below ground beneath large rocks or woodpiles, or in places such as rotten logs.

3.2. During March, they begin to emerge from hibernation and may be found basking in open areas or beneath dark coloured or metallic material to warm up.

3.3. At night, during cold or extremely hot weather, or when threatened reptiles will hide beneath large stones, logs, boulders, in cracks in the ground or in small burrows abandoned by other animals.

4. Safeguarding Procedures

- Prior to any movement or storage of soil, a fingertip search for reptiles will be undertaken by a suitably qualified ecologist of both the access route and area to be used for the storage of soil;
- Should any reptiles be found throughout the fingertip search, these will be moved by the supervising ecologist to another area of suitable habitat within the site and as far away from the works as possible;
- Immediately following this, any vegetation present will be strimmed to approximately 20cm (under the direct supervision of the suitably qualified ecologist), and will be followed by a further fingertip search;
- Following a final fingertip search by the suitably qualified ecologist, any remaining vegetation in these areas will be strimmed to ground level, thus deeming the area unsuitable for reptiles;
- Following confirmation by the suitably qualified ecologist that the area is no longer suitable for reptiles, the movement of soil can commence without the ecologist's presence on site;
- A watching brief by site staff should be maintained throughout the course of the movement of soil, in the unlikely event that reptiles are present in the cleared area;

5. What to Do If You Find a Reptile

5.1. Should any reptiles be encountered during any other works then these should similarly be carefully collected with clean / gloved hands and moved to a safe area clear of the works.

However, in this instance, if any injured or dead reptiles are found, Aspect Ecology should be contacted immediately on 01295 276066 to ensure works continue in compliance with the relevant legislation.

If in doubt, cease work and consult with Aspect Ecology.

We, the undersigned, acknowledge that the landscaping works to be undertaken must accord with this information and that we are responsible for avoiding harm or disturbance to reptiles, in addition to birds and their nests during these works.

Please sign and print names of all attending parties.

Company	Name	Signature	Date
Developer/Contractor			
Contract Manager			
Ecologist			

Appendix 4404/4:

Nesting Bird Toolbox Talk

Toolbox Talk

Project: Land at New Place Farm, Pullborough, West Sussex

Nesting Birds – Guidance for Developers and Contractors

Date: August 2026

1. Legal Protection

1.1. All wild birds and their nests receive protection under Section 1 of the Wildlife and Countryside Act 1981 (as amended) in respect of killing and injury, and their nests, whilst being built or in use, cannot be taken, damaged or destroyed.

2. Actions for Vegetation Removal or Ground Clearance

2.1. To avoid a potential offence under the Wildlife & Countryside Act, no clearance of suitable nesting bird habitat (this can include vegetation, buildings and arable land) will be undertaken during the bird-nesting season (1st March to 31st August inclusive). If this is not practicable, any potential nesting habitat to be removed will first be checked by a competent ecologist in order to determine the location of any active nests.

2.2. Any active nests identified would then need to be cordoned off (minimum 5m buffer) and protected until the end of the nesting season or until the birds have fledged. These checking surveys would need to be carried out no more than three days in advance of vegetation clearance.

3. Nesting Birds on Construction Sites

3.1. Birds can nest in strange places, for example on/in plant left on site over the weekend, in pallets or other stored materials, or even in cigarette bins! Please be aware of any birds flying back and forth to a particular location, particularly when returning to site after the weekend. If any active nests are discovered on-site, Aspect Ecology should be contacted immediately on **01295 276066** to ensure works continue in compliance with the relevant legislation.

We, the undersigned, acknowledge that the landscaping works to be undertaken must accord with this information and that we are responsible for avoiding harm or disturbance to reptiles, in addition to birds and their nests during these works.

Please sign and print names of all attending parties.

Company	Name	Signature	Date
Developer/Contractor			
Contract Manager			
Ecologist			

ecology • landscape planning • arboriculture

aspect ecology APEM Group

Aspect Ecology Ltd
West Court
Hardwick Business Park
Noral Way
Banbury
Oxfordshire OX16 2AF

T: 01295 279721
E: info@aspect-ecology.com
W: www.aspect-ecology.com