PLANNING
CYCLE STORE
PLAN

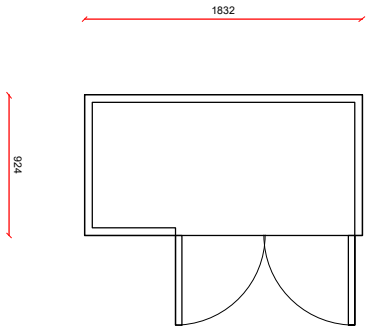

ASGARD ADDITION BIKE SHED X 3

THE ASGARD ADDITION IS AN ALL-METAL BIKE SHED, PROVIDING SECURE BIKE STORAGE FOR 3 BIKES

CONSTRUCTED FROM THICK, GALVANISED (WEATHERPROOF) STEEL PANELS AND FEATURES AN INTEGRAL METAL FLOOR AND CONVENIENT LARGE DOUBLE DOOR ACCESS

SECURED WITH A 3 POINT LOCKING SYSTEM, COMBINING A HIGH-QUALITY LOCK WITH A TOUGH INTERNAL DEADBOLT SYSTEM

PLANNING
CYCLE STORE
FRONT ELEVATION

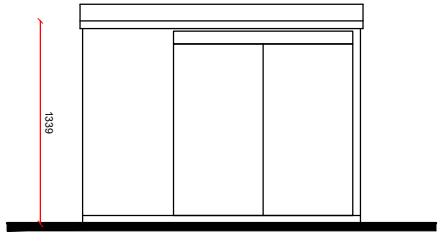

PLANNING
CYCLE STORE
REAR ELEVATION

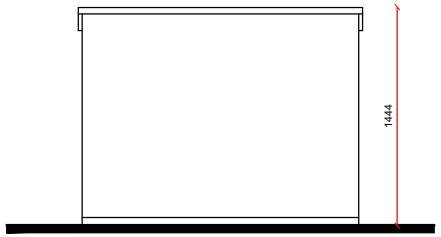

PLANNING
CYCLE STORE
SIDE ELEVATION 1

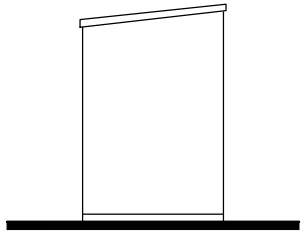

PLANNING
CYCLE STORE
SIDE ELEVATION 2

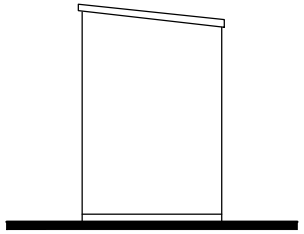

0 500mm 1M 2M

1:50

-

Rev.	Date	Details

Project:
Mill Hill House
Guildford Road
Rudgwick

Content:
P L A N N I N G
Cycle Store
Plans, Elevations & Image

North:

Drawn By: SAR Date: 09.11.26

Scale: 1:50@A4 Rev: -

arcline architecture
info@arclinelinearchitecture.co.uk | www.arclinearchitecture.co.uk | 07738 398637

GR/RW/26/PL/L10