Sluetts Farm: Temporary Workers' Accomodation

Discharge of Condition 6

Quality management			
Prepared by:	Miles Ryan-Cummings	Graduate Consultant	
Authorised by:	Dan Smyth	Director	
Report ref:	Rev_1	Date of issue:	12/04/2024

Revision history			
Rev	**Date**	**Status**	**Reason**
0	04/04/2024	Draft	Draft for internal review
1	12/04/2024	Final	Issued to client.

Table of Contents

1 Introduction 3
2 Details of the water efficiency measures 4
3 Details of the rainwater harvesting system 6
4 Conclusion 9
Appendix A – Water Neutrality Statement 10
Appendix B – Decision Notice 37

List of Tables

Table 2.1: Water fittings schedule....5

List of Figures

Figure 2.1: Unit plans of the Proposed Development 4
Figure 3.1: Rainwater harvesting system service quote 7

1 Introduction

1.1.1 In February 2023, Christ's Hospital Foundation (the Applicant) submitted a planning application for the *"Erection of temporary agricultural workers dwelling"* at Sluetts Farm, Two Mile Ash Road, Horsham, West Sussex, RH13 0LA (the Proposed Development; planning ref: DC/23/0306), to Horsham District Council (the Council). The original planning application was accompanied by a Water Neutrality Statement (Appendix A) which proposed to offset the additional water demand created by the Proposed Development through the installation of a rainwater harvesting system (RHS) to one of the barns located at Sluetts Farm. This RHS would replace mains-supplied water used for agricultural purposes at the farm, making the same volume of mains-supplied water available for use by the Proposed Development.

1.1.2 On the 23rd February 2024, the Council granted planning permission for the Proposed Development subject to the discharging of conditions enclosed within the Council's decision notice (Appendix B). One pre-commencement (slab level) condition and one pre-occupation condition relate to the Water Neutrality Statement that was submitted alongside the original planning application.

1.1.3 This document relates to pre-commencement (slab level) condition 6 which notes that *"No development above ground floor slab level shall commence until full details of the water efficiency measures and rainwater/greywater harvesting system required by the approved water neutrality strategy (Savills received by the Council on 03.05.2023) have been submitted to and approved in writing by the Local Planning Authority. The rainwater harvesting system shall include suitable storage tanks to provide a minimum 35 days storage capacity."*

1.1.4 The following sections provide full details of: (a) the water efficiency measures; and (b) the rainwater/greywater harvesting system required by the approved water neutrality strategy.

2 Details of the water efficiency measures

2.1.1 The Proposed Development would take the form of the Pemberton Avon 2 berth 30x12ft, comprising the configuration illustrated in Figure 2.1.

Figure 2.1: Unit plans of the Proposed Development

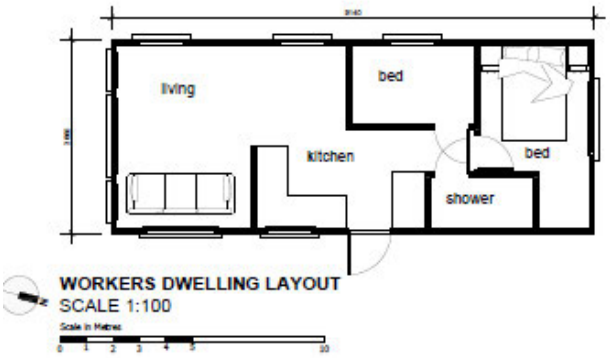



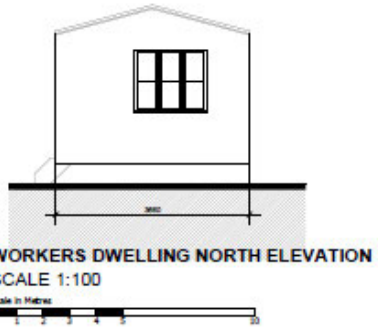

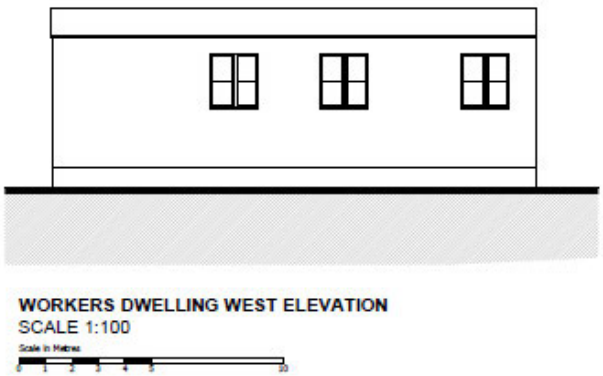

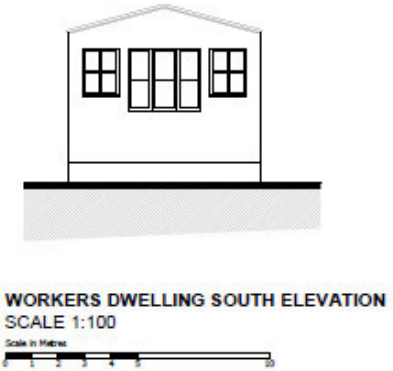

2.1.2 A schedule of water-consuming fittings and appliances is presented in Table 2.1. These fittings formed the basis of the Building Regulations Part G calculations included within the Water Neutrality Statement accompanying the original planning application. They reflect the fittings available in the Pemberton Avon 2 berth 30x12ft, i.e. there would be no bath, washing machine or dishwasher and as such, these items were excluded from the Part G calculation.

Table 2.1: Water fittings schedule

Fitting	Measure (units)	Value	Product details
Bathroom			
WC (dual flush)	Flush volume (litres)	Full flush: 6.00 Half flush: 4.00	Atlas Trade Sakkara Close Coupled PB Cistern with Fittings: SK2WHPCI
Bathroom taps	Flow rate (litres/min)	8.10	Ethos Mini Mono Basin Mixer: ETH313
Shower	Flow rate (litres/min)	11.00	Sagittarius Milan Vertical Exposed Shower Valve Chrome: SH/163/C
Kitchen			
Kitchen taps	Flow rate (litres/min)	13.90	Peglerflow Mono Sink Mixer: 4J4011

3 Details of the rainwater harvesting system

3.1.1 Details of the rainwater harvesting system (RHS) to be installed at Sluetts Farm were included within the Water Neutrality Statement submitted alongside the original planning application. Figure 3.1 overleaf illustrates the service quote provided by the RHS supplier, JRH Water Management, for the RHS to be installed at Sluetts Farm.

3.1.2 The service quote includes a schematic of the RHS. The outline represents the barn roofs, where the rainwater will be collected and funnelled into existing guttering. The front valley outlet will be blocked, and instead rainwater will be directed towards the back of the barn where it will pass through a filter and feed into water tanks for storage. The system is split into two as the barn roof is comprised of two different roofs, each requiring a separate RHS with one tank serving the smaller part of the roof and three interlinked tanks serving the larger part of the roof. The supplier explains the basis of the tank sizing in the "RWH SYSTEM" section of their system service quote on Figure 3.1.

3.1.3 To ensure that water from the RHS will only be used for agricultural purposes, the Applicant has confirmed that *"Water supply pipes would be separated to only deliver rainwater to calf and cattle rearing units (animal drinking and wash down hoses). Onsite small kitchen, hand wash and w/c will be plumbed to the existing mains water supply."*

35-day drought storage capacity

3.1.4 As illustrated on Figure 3.1, the RHS comprises four 22,000 litre tanks, resulting in a maximum storage capacity of 88,000 litres at any given time. As per an email from Kate Turner of Horsham District Council received on the 26/04/2023, *"35 days drought resistance to the additional amount of water proposed to be used"* is required. The additional water demand created by the Proposed Development, as evidenced within the Water Neutrality Statement, is anticipated to be 202.81 litres per day. During a 35-day drought, this equates to 7,089.5 litres, which can more than adequately be stored within the 88,000 litre tanks.

Figure 3.1: Rainwater harvesting system service quote

JRH water management

Home Close
East Firsby
Market Rasen
Lincolnshire
LN8 2DB

Date:13/01/2021

To

Christ's Hospital
The Counting House
Christs Hospital
Horsham
West Sussex
RH13 0TL
Site - Westons Barn Farm
RH13 0BD
Francis Pulvermacher
[redacted]

Salesperson	Job	Payment Terms	Due Date
	Rainwater Harvesting System – Estimate		

Qty	Description	Unit Price	Line Total
Overview	To supply and install RWH system to sites – based on information provided - • RWH system to be installed to barn – taking total roof area • Splitting roof into two system – 1 x side for one system, valley and other side second system • Overflows – to 1 x drain back right corner – assuming 6" drain? • Tanks sited as per picture at bottom of estimate • Due to front valley outlet not being able to be taken across due to doors based on this outlet being blocked to make water run to back outlet • All based on pipework for both systems being installed to timber boarding on siding of shed		
RWH SYSTEM	Valley and side system Roof – 1012m2 roof size with average rainfall per year of 850mm with the filters working at 90% of water going to tanks gives – 774,180L per year going to store average per system 25mm of rainfall on the roof will collect to tanks – 22,700L • 3 x 22,000L NP tank with 2" outlets and fxf taps • 2 x tank link kits • 1 x Wall mounted filter set with mount brackets • 160mm & 110mm pipe, fittings & clips in black • 6x2 treated timber for filter frame supports • 1 x Mechanical tank water level gauge • Labour for x2 to install inc all screws, glues etc to complete works Side system Roof – 337m2 roof size with average rainfall per year of 850mm with the filters working at 90% of water going to tanks gives – 257,805L per year going to store average per system 25mm of rainfall on the roof will collect to tanks – 7582L		

	• 1 x 22,000L NP tank with 2" outlets and fxf taps • 1 x Wall mounted filter set with mount brackets • 110mm pipe, fittings & clips in black • 6x2 treated timber for filter frame supports • 1 x Mechanical tank water level gauge • Labour for x2 to install inc all screws, glues etc to complete works		
PLEASE NOTE	• Recommended - Base of 4m x 12m for tanks x 3 and 4m x 4m for 1 x tank • Full access inside and outside of shed for duration of works • Tanks will need to be offloaded and put in location – telehandler needed with driver at all locations • Rubbish removal by customer		
		Subtotal	
		VAT 20%	
		Total	

TERMS:
ALL PRICING IS VALID FOR 30 DAYS FROM DATE OF QUOTATION
JRH RESERVE THE RIGHT TO AMEND PRICES SHOULD SUBSEQUENT INFORMATION BE AT VARIANCE TO THE SPECIFICATION RECIEVED
PAYMENT TERMS AS PER ABOVE AND FINAL PAYMENT DUE WITHIN 48HRS OF JOB COMPLETION
JRH DO NOT GUARANTEE THE QUALITY OF THE EXISTING PIPE WORK AND CANNOT BE HELD RESPONSIBLE FOR ANY LEAKS CAUSED THROUGH DEFECTS IN THIS PIPE WORK
ALL MATERIALS REMAIN THE PROPERTY OF JRH WATER MANAGEMENT UNTIL FULL PAYMENT IS RECEIVED

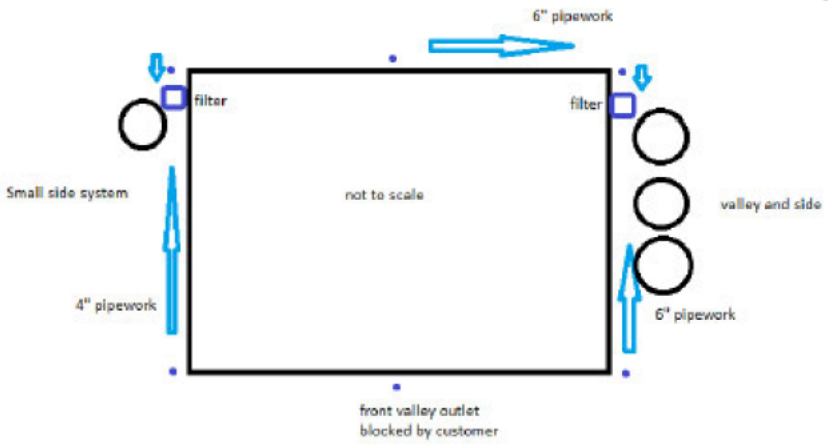

4 Conclusion

4.1.1 This document has set out all of the necessary evidence to discharge pre-commencement (slab level) condition 6 which was included within Horsham District Council's decision notice (Appendix B) associated with the Proposed Development. Full details of the water efficiency measures and rainwater/greywater harvesting system required by the approved water neutrality strategy have been set out within Sections 2 and 3, including the provision of 35-day storage capacity of the rainwater harvesting system.

4.1.2 For the reasons stated above, it is our view that pre-commencement condition 6 can be discharged.

Appendix A – Water Neutrality Statement

Water Neutrality Statement

Sluetts Farm: Temporary Workers' Accommodation

Document Control

	Water Neutrality Statement
Version No.	Rev4
Date Approved	2 May 2023
Date 1st Issued	3 May 2023

Version History

Version	Date	Authored by:	Reviewed by:	Approved by:	Description of change
REV0	March 2023	Miles Ryan-Cummings	-	-	Working draft
REV1	March 2023	Miles Ryan Cummings	Tara Barratt	-	Internal review
REV2	March 2023	Miles Ryan Cummings	-	-	Water bills/metre readings added
REV3	March 2023	Miles Ryan-Cummings	Dan Smyth	Dan Smyth	Draft issued to client
REV4	May 2023	Miles Ryan-Cummings	-	Dan Smyth	Calculations updated to give more detail of RHS + updated occupancy rate; units changed to l

Table of Contents

1 Introduction 3
2 Background: Water Neutrality 5
3 Site Description 7
4 Planning Policy 9
5 Water Neutrality Assessment 10
5.2 Historical Water Demand 10
5.3 Anticipated Water Demand 10
5.4 On-site Measures 12
5.5 Water Neutral? 13
6 Commentary and Conclusions 14
7 References 15
Appendix A 16
20/05/2021 Water Bill 16
Water Meter Reading 27/03/2023 18
Appendix B 19
Toilet Specification 19
Kitchen Tap Specification 20
Shower Specification 21
Bathroom Tap Specificaiton 22
Appendix C 23
Rainwater Harvesting System Service Quote 23

List of Tables

Table 1. Detailed water neutrality hierarchy; adapted from (WaterWise, 2021) 6
Table 2. Sluetts Farm water consumption 10
Table 3. Water consumption across the site 12
Table 4. Rainwater harvesting potential capacity 13
Table 5. Determining Water Neutrality 13

List of Figures

Figure 1: Water neutrality hierarchy; adapted from (WaterWise, 2021) 5
Figure 2: Site Location 7
Figure 3: Unit plans of the proposed development 8
Figure 4. Part G Output for proposed dwelling 11

1 Introduction

1.1.1 This Water Neutrality Statement has been prepared to accompany a planning application, submitted to Horsham District Council (HDC) on behalf of the Applicant, Christ's Hospital Foundation (herein "CHF"), for the following development proposal:

"Erection of temporary agricultural workers dwelling."

1.1.2 CHF is a registered charity, whose principal objective is to aid the advancement of education for children, principally for the benefit of those who have social, financial and other specific needs. The assets and endowments of the Foundation are used to support more than 600 bursary places at the school. The ability of the Foundation to meet the financial needs of the school depends critically on funding which derives from the endowment and returns from their investments.

1.1.3 The opportunities provided by the Foundation's land are directly linked to its charitable purposes. The Foundation view the proposed development as an opportunity to provide capital to support the objectives of the charity whilst improving local housing supply.

1.1.4 This report responds to HDC's delegated applications assessment sheet. In particular, it responds to Natural England's objection to the proposed development which is on the basis that it cannot be concluded beyond reasonable scientific doubt that new development in this zone would not have an adverse effect on the integrity of the Arun Valley SAC, SPA and Ramsar sites. The application site falls within the Sussex North Water Supply Zone as defined by Natural England which draws a proportion of its water supply from groundwater abstraction at Hardham.

1.1.5 Groundwater abstraction is licensed by the Environment Agency. In the case of water abstracted at Hardham, this is managed by Southern Water who apply for the right to abstract water in accordance with population forecasts associated with the relevant Local Plan, including windfall development. Such applications are accompanied by the relevant environmental information in order to allow the Environment Agency to consider licensing in light of this. It is understood that groundwater abstraction from Hardham is being reduced in accordance with the Environment Agency's ongoing management requirements.

Pulborough Brooks

1.1.6 Pulborough Brooks Nature Reserve is managed by the RSPB to provide the perfect condition for wildlife (RSPB, 2023). The grasslands are part of the Arun Valley floodplain and are criss-crossed by ditches which are home to some of our rarest creatures and plants. This includes the threatened little ramshorn whirlpool snail.

1.1.7 A combination of controlled flooding, grazing and hay cutting are used to manage the wet grasslands to create a healthy mosaic of grassland habitats.

1.1.8 The ditches which cross the wet grasslands need clearing out to move water around the site. This is done on rotation, to always keep some of the vegetation which lives there and give a home to rare wildlife, including the little ramshorn whirlpool snail.

1.1.9 In 2017 the ditches were the focus of a Heritage Lottery funded project “Back from the Brink” which helped create ideal conditions for the rare ramshorn whirlpool snail and other aquatic species.

2 Background: Water Neutrality

2.1.1 Definitions of water neutrality often vary depending on the context in which it is used. Southern Water provide perhaps the most relevant definition of water neutrality in their Draft Water Resources Management Plan 2024 (DWRMP24) (Southern Water, 2022). It states:

"For every new development, total water use in the region after the development must be equal to or less than the total water use in the region before the new development."

2.1.2 Water neutrality should be achieved over a set period, such as 10 or 20 years, and assessed at various stages of the build (e.g. planning and design, as constructed, and ongoing monitoring once the homes have been built and are occupied). Water efficiency measures may deteriorate over time, so may need ongoing maintenance or replacement in order to maintain water neutrality.

2.1.3 There are three steps to achieving water neutrality as shown in Figure 1:

- reducing water use by making the new build as water efficient as possible;
- installing water reuse systems, such as rainwater harvesting or grey water recycling; and
- offsetting any remaining demand in the existing local region.

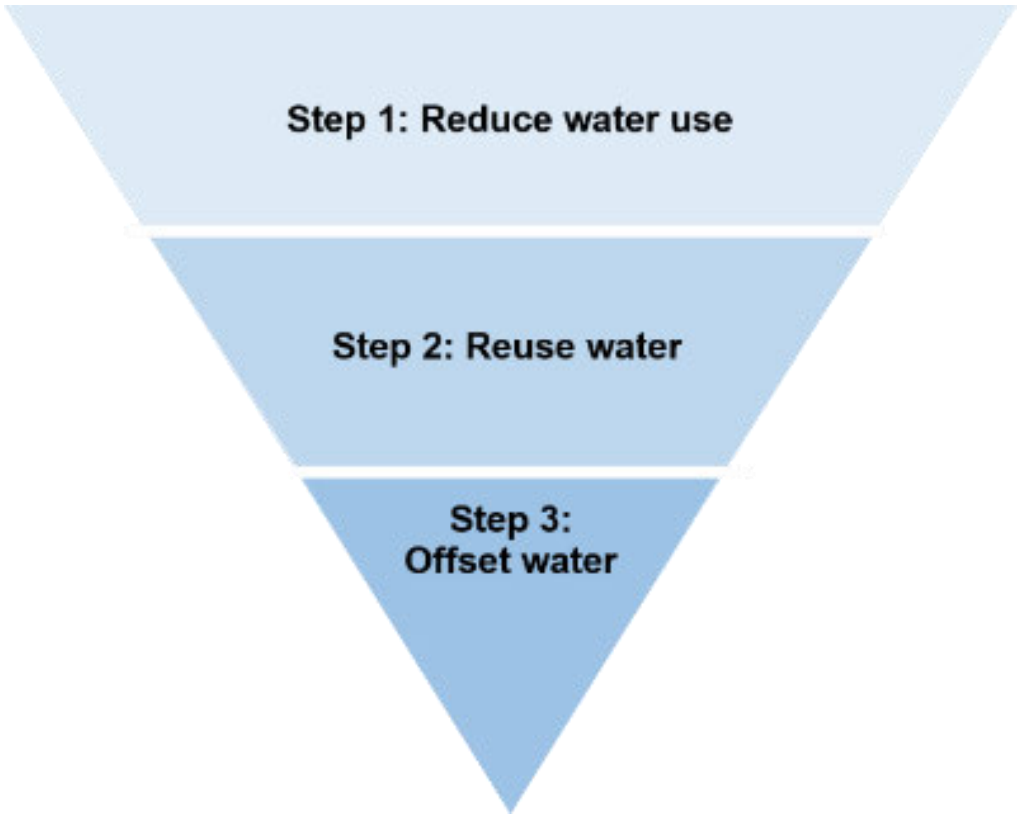

Figure 1: Water neutrality hierarchy; adapted from (WaterWise, 2021)

Table 1. Detailed water neutrality hierarchy; adapted from (WaterWise, 2021)

Step		Description	Example measures
	1. Reduce water use	The first and most important step to achieving water neutrality is to ensure that water is used as efficiently as possible. The smaller the water demand of a building due to its design and fittings the less water is needed to be reused and offset.	- Water efficient devices - Smart metering - Water saving culture
	2. Reuse water	Once water use is reduced to an ambitious level, water reuse should be considered. Water reuse generally refers to the capture, treatment (if required) and use of alternative water supplies for non-potable purposes.	- Rainwater harvesting - Greywater recycling - Blackwater recycling
	3. Offset water	The remaining water which can't be satisfied with non-potable sources needs to be offset. This can be done by investing in schemes that save water in the local region (need to be within the same water resource zone as the new development).	- Funding water efficiency audits and retrofits for existing homes or businesses

3 Site Description

3.1.1 The application site (Sluetts Farm) forms part of the wider Westons Farm holding, as shown in Figure 2. It lies approximately 500 m to the east of the CHF School Campus and is under the jurisdiction of HDC. It also lies within the Southwater Neighbourhood Plan area. The site itself contains a hay barn, dairy building, two cattle sheds and silage clamps. Access is obtained directly onto Two Mile Ash Road.



Figure 2: Site Location

3.1.2 The proposed development is for a single detached dwelling (residential use) with a Gross External Area of 33.45 m^2 (30x12 ft), which would be occupied by agricultural workers for a period of up to 3 years. The dwelling would take the form of the Pemberton Avon 2 berth 30x12 ft (Pemberton Park and Leisure Homes, 2023) comprising 2 bedrooms, a kitchen, living room and bathroom; unit plans of the proposed development are provided in Figure 3.

3.1.3 The proposed development would be positioned on the eastern side of the access track adjacent to the agricultural barns where livestock is housed. Access would be provided to the east of the site via a private track off the existing track between Two Mile Ash Road and Sluetts Farm.

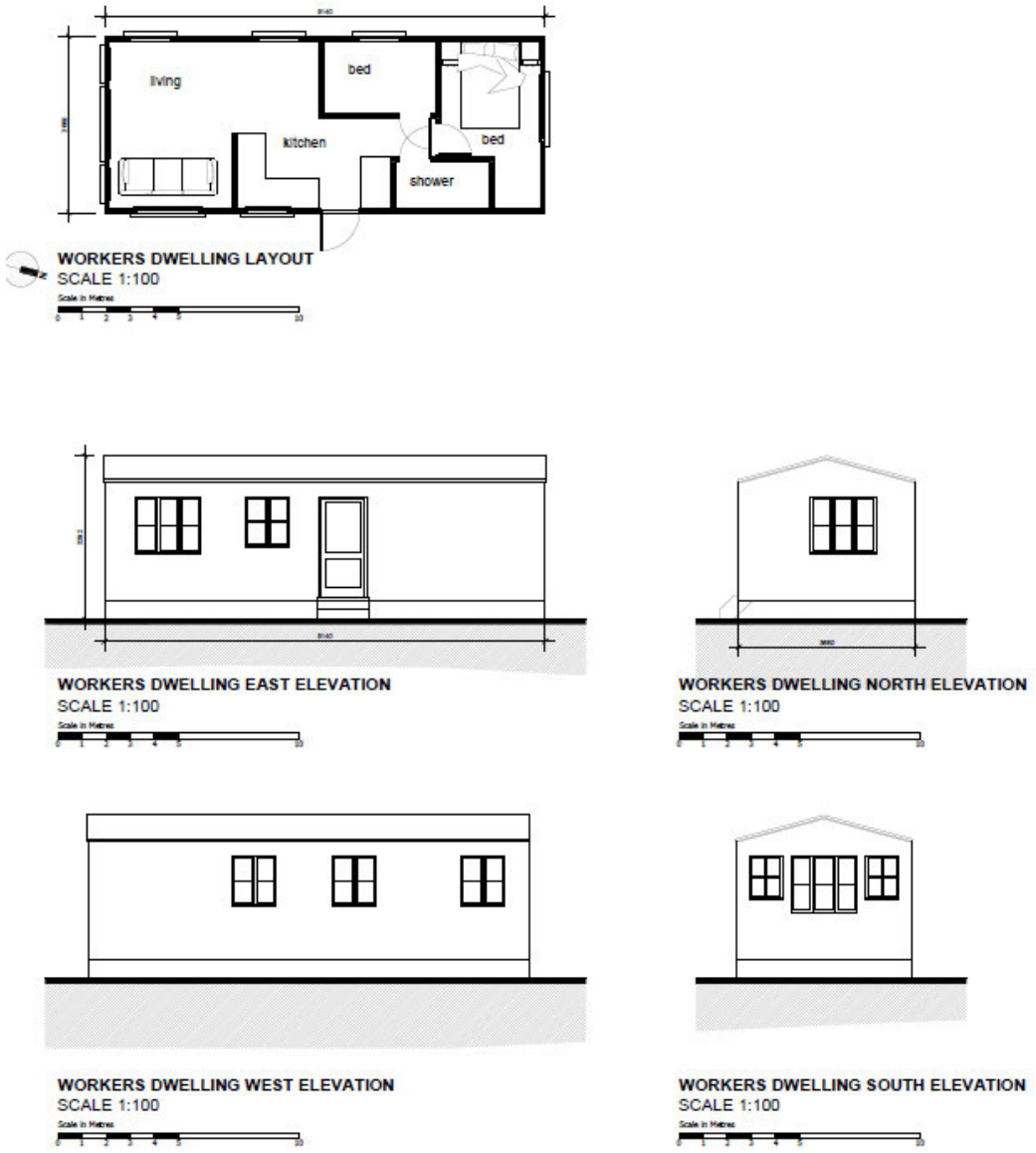

Figure 3: Unit plans of the proposed development

4 Planning Policy

4.1.1 HDC is situated in an area of serious water stress, as identified by the Environment Agency. Natural England issued a position statement (Natural England, 2021) on 14 September 2021 regarding the mitigation of water usage and the need to ensure water neutrality is achieved as part of all new developments across the Sussex North Water Supply Zone (SNWSZ), in which HDC, parts of Chichester District and the Borough of Crawley are located. The position statement outlines that it cannot be concluded that new development in this zone would not have an adverse effect on the integrity of the Arun Valley Special Protection Area/Special Area of Conservation, and Ramsar sites, which could result in the potential threat of extinction of some species.

4.1.2 Under the Conservation of Habitats and Species Regulations 2017 (s.63) (HM Government, 2017), as a competent authority, it is the duty of HDC to consider the impact of development on protected species and habitats. The application site, Sluetts Farm, falls within the SNWSZ which draws part of its water supply from groundwater abstraction at Hardham (near Pulborough).

4.1.3 The Horsham District Planning Framework 2015 (HDPF) (Horsham District Council, 2015) is the overarching planning document for HDC outside the South Downs National Park (SDNP), and replaces the Core Strategy and General Development Control Policies documents which were adopted in 2007. Any new development which does not achieve water neutrality will be considered contrary to Policy 31 of the HDPF which states:

"Although located in the South Downs National Park, applicants will need to be particularly mindful of the impact development within Horsham district could have on Arun Valley Special Protection Area (SPA) and The Mens Special Area for Conservation (SAC). Both these sites are of international importance for nature conservation, and applicants will need to demonstrate that development does not have adverse impacts on either of these sites in accordance with relevant legislation. In the case of Arun Valley, proposals must demonstrate that they will avoid harm to the water quality and water levels on the site."

5 Water Neutrality Assessment

5.1.1 As per Southern Water's definition of water neutrality, it is necessary to calculate the difference between historical and anticipated water consumption at the site. If both values are equal, or if a surplus is generated, then the proposed development will adhere to or contribute positively towards the water neutrality ambitions within the SNWSZ. According to this definition, if anticipated consumption is higher than historical consumption, the difference between the two must be offset within the region.

5.2 Historical Water Demand

5.2.1 Although the proposed development involves the erection of a temporary agricultural workers' dwelling on previously vacant land, as mentioned in Section 3, it forms part of a pre-existing farm holding. Therefore, historical water consumption at Sluetts Farm is used to inform the baseline figure.

5.2.2 Calculated baseline water consumption at Sluetts Farm is shown in Table 2. The figure has been derived from two meter readings (m^3), 22 months apart, which have been provided by the applicant and can be found in Appendix A. On the basis that the bills from Southern Water since May 2021 have all been on estimated readings, this approach is deemed to provide the most accurate understanding of consumption.

Table 2. Sluetts Farm water consumption

Date of meter reading	Consumption (m^3)	Consumption (l)
20/05/2021	29,156.00	29,156,000
27/03/2023	32,714.00	32,714,000
Annual average	**1,888.67**	**1,888,666.67**
Daily average	**5.17**	**5,170.89**

5.3 Anticipated Water Demand

5.3.1 Anticipated water consumption has been calculated through the utilisation of the water efficiency calculator for dwellings, included in Approved Document G (Part G) of the Building Regulations (2015): Sanitation, hot water safety and water efficiency (HM Government, 2015).

5.3.2 A 'Fittings approach' has been introduced to the Part G calculator which calculates total water consumption (litres/person/day) based on flow rates and water consumption of sanitary ware and appliances, multiplied by a government 'use factor', which is based on how often they are likely to be used (Jostec, 2021).

5.3.3 The 'Fittings approach' of the Part G calculator is based on flow rates and water consumption of sanitary ware and appliances. The applicant has advised that the fittings would reflect those available in the Pemberton Avon 2 berth 30x12 ft, i.e. there would be no bath, washing machine or dishwasher (Pemberton Park and Leisure Homes, 2023). As such, these items have been excluded from the Part G calculation.

5.3.4 Details of the water fittings installed within the Pemberton Avon 2 berth 30x12 ft were supplied by Pemberton Park and Leisure Homes (Pemberton Park and Leisure Homes, 2023). Toilet flush volumes, and flow rates for the shower, bathroom and kitchen taps are derived from their respective product specifications. Flows rates are based on the typical end of communication water pressure aimed for by water companies, which is 1 bar (WaterSafe, 2023). Copies of product specifications can be found in Appendix B.

5.3.5 Total water consumption, as per the Part G calculation, is given in litres/person/day. Hence, Part G output was multiplied by the anticipated occupancy rate (number of residents) of the proposed development to calculate the total water use across the site. In this instance, the applicant has advised that there should be one person only living at the proposed development, and so in reality the Part G output is equal to all water consumed within the dwelling per day. However, following the guidance set out by the LPA, an occupancy of 1.88 was applied to the calculations, reflecting average occupancy rates for a two-bedroom dwelling based on extrapolated 2011 census data for Horsham District.

5.3.6 Outputs from the Part G calculator are presented in Figure 4. Average daily water consumption for the farm worker is 107.88 l/p/d, which is below the Southern Water target of 109 l/p/d by 2050.

Installation Type	Unit of measure	Capacity / flowrate (1)	Use factor (2)	Fixed use (l/person/day) (3)	Litres/person/day =[(1)*(2)]+(3) (4)
WC (single flush)	Flush volume (litres)		4.42	0	
WC (dual flush)	Full flush volume (litres)	6	1.46	0	8.76
	Part flush volume (litres)	4	2.96	0	11.84
WCs (multiple fittings)	Average effective flushing volume (litres)		4.42	0	
Taps (exc kitchen taps)	Flow rate (l/min)	8.10	1.58	1.58	14.378
Bath (where shower also present)	Capacity to overflow (l)		0.11	0	
Shower (where bath also present)	Flow rate (l/min)		4.37	0	
Bath only	Capacity to overflow (l)		0.5	0	
Shower only	Flow rate (l/min)	11	5.6	0	61.6
Kitchen sink taps	Flow rate (l/min)	13.90	0.44	10.36	16.476
Washing machine	l/kg dry load	0.00	2.1	0	0
Dishwasher	l/place setting	0.00	3.6	0	0
Waste disposal unit	l/use	0	3.08	0	0
Water softner	l/person/day	0	1	0	0
	(5)	**Total calculated use (l/person/day) = S[column (4)]**			**113.05**
	(6)	Contribution from greywater (l/person/day) from Table 4.6			0
	(7)	Contribution from rainwater (l/person/day) from Table 5.5			0
	(8)	Normalisation factor			0.91
	(9)	**Total water consumption (CSH) = [(5)-(6)-(7)]*(8) (l/person/day)**			**102.88**
	(10)	External water use			5
	(11)	**Total water consumption (Part G) = (9)+(10) (l/person/day)**			**107.88**

Figure 4. Part G Output for proposed dwelling

5.3.7 Application of the average occupancy rates of a two-bedroom dwelling in Horsham would mean that daily water consumption would be 202.81 l/d (107.88 l/p/d x 1.88). This water demand was added to the existing baseline at Sluetts Farm to give anticipated worst-case-scenario water consumption across the site. This allows for comparison with historical water consumption, and therefore enables judgement as to whether the proposed development is water neutral or not.

5.3.8 Table 3 outlines historical and anticipated water demand at the site. If it is assumed that the farm worker was not previously living in the SNWSZ or using water on the site, and that the dwelling is inhabited at the area average occupancy as opposed to the 1 employee anticipated by the applicant, total annual water consumption across the site would increase by 74,025.65 l. As this figure is greater than the historical baseline, further measures would be required to ensure water neutrality is achieved.

Table 3. Water consumption across the site

	Average Daily Consumption (l/d)	Average Annual Consumption (l/year)
Historical	5170.89	1,888,666.67
Anticipated	5373.70	1,962,692.32
Additional Demand	+202.81	+74,025.65

5.4 On-site Measures

5.4.1 In this case, the applicant proposes the installation of a bespoke Rainwater Harvesting System (RHS) to one of the barns on site. In the past, the vast majority of metered water consumption at Sluetts Farm has been used for agricultural purposes, with a negligible volume (<1%) used for hand washing and occasional kettle boiling; the rainwater collected by the RHS would replace a significant portion of this demand. The applicant has confirmed that *"Water supply pipes would be separated to only deliver rainwater to calf and cattle rearing units (animal drinking and wash down hoses)"*, which means that the harvested rainwater would not be for human consumption, and hence does not require treatment prior to use.

5.4.2 HDC advise that they *"will require details of the rainwater harvesting including the quantum of water capable of being harvested from the site and the means and capacity for storage to cater for drought."*, which equates to *"35 days"* (Horsham District Council, 2022). Although the harvested water is not for human consumption, drought capacity calculations have been conducted using the volume of additional water consumed by the proposed development (202.81 l/d) as this is figure represents the volume of water required to be offset by the RHS.

5.4.3 During a 35 day drought, additional water demand across the site due to the proposed development would equate to 7,098.35 l (35 x 202.81 l/d). The total capacity of the system at any given time is 88,000 l (4 x 22,000 l tanks), meaning that there is capacity to offset the additional demand caused by the proposed development during a period of drought.

5.4.4 During email correspondence on the 26/04/2023, the case officer from HDC also advised that there is a need *"to include a commitment to filling the rainwater tanks from outside of the water resource region prior to occupation of the dwelling with at least the 35 days capacity so that the system does not start at zero."* While the applicant would prefer to fill the system with rainwater harvested at the site, which is considered more sustainable, if this is not achieved prior to occupation, the applicant will commit to filling the rainwater tanks with the balance of 7,098.35 l from outside of the water resource region prior to occupation of the dwelling, if this is considered necessary, bearing in mind that no additional employment is proposed at the site and the employee is an existing consumer of water.

5.4.5 The annual offsetting capacity of the RHS has been calculated with consideration to average rainfall local patterns and barn roof area, and assumes that 90% of water will be going to the tanks. Further details of the system can be found in the service quote from the supplier, JRH Water Management (JRH Water Management, 2023), attached in Appendix C.

Table 4. Rainwater harvesting potential capacity

RHS Component	Annual Capacity (l/year)	Daily Capacity (l/d)
Valley and side system	774,180.00	2,121.04
Side system	257,805.00	706.31
Total	**1,031,985.00**	**2,827.36**

5.5 Water Neutral?

5.5.1 The difference between historical and anticipated water consumption trends is shown in Table 5. The results show that through the implementation of the RHS, there would be a decrease in average water consumption relative to no development at all. Not only does this qualify the proposed development as water neutral, but this impressive 51% reduction across the Sluetts Farm site would occur despite the erection of a new dwelling, which is a testament to the effectiveness of using water efficient water management systems such as RHS.

Table 5. Determining Water Neutrality

	Average Annual Mains Consumption (l)	Average Daily Mains Consumption (l)
Historical	**1,888,666.67**	5,174.43
Anticipated with RHS	930,707.32	2,549.88
Difference	-957,959.35	-2,624.55

6 Commentary and Conclusions

6.1.1 Noting that no additional employment is proposed at Sluett's Farm, and so, arguably, this development is inherently water neutral, this statement has been prepared in the light of the current delay to the Horsham District Local Plan following the release of Natural England's position statement regarding water abstraction within the SNWSZ. The consequence of this has been to delay development which may contribute to wider social, economic and environmental commitments made by HDC. This application, along with others, is being progressed anticipating the partnership work between HDC, Southern Water and Natural England being further progressed so a Water Neutrality Strategy for the area can be developed.

6.1.2 The Water Neutrality Strategy for the area will likely be in conjunction with the goals set out in Southern Water's next Water Resource Management Plan (WRMP24), which is currently available in draft form. The Draft WRMP24 seeks to reduce water stress in the supply zone by reducing leakage by 50%, and to achieve Per Capita Consumption (PCC) targets of 109 l/p/d by 2050, building on the substantial reductions in water supply achieved by Southern Water since privatisation, from over 725 Ml/day in 1989/1990 to less than 550 Ml/day in 2017/2018. The Part G output shows that the new, temporary agricultural workers dwelling would have a PCC of 1,07.9 l/p/d, which is in line with the targets in the Draft WRMP24.

6.1.3 As well as this, the calculated change in mains water consumption across the site presented in Table 5 illustrates how the proposed development would result in a reduction in overall metered water demand. The installation of a rainwater harvesting system would replace 1,031,985 l of existing mains water supply per year that is currently used for agricultural purposes. As such, the proposed development would provide a water surplus over existing modelled consumption of over +957,959 l per year, and thereby strongly supports HDC's Water Neutrality policy and aspirations. It also has the potential to provide offset opportunities for other development.

6.1.4 There would be no need for any off-site offsetting and the development would provide a small but significant positive contribution to the local water budget.

6.1.5 Without prejudice to the view that the competent authority for water abstraction licensing is the Environment Agency, the evidence provided in this statement provides a firm basis and strong incentive to progress the planning application from a water neutrality perspective.

7 References

HM Government. (2015). *The Building Regulations 2010. Approved Document G: Sanitation, hot water safety and water efficiency.*

HM Government. (2017). *The Conservation of Habitats and Specifes Regulations.* Retrieved from legislation.gov.uk: https://www.legislation.gov.uk/uksi/2017/1012/regulation/63

Horsham District Council. (2015). *Horsham District Planning Framework.* Retrieved from Horsham District Council: https://www.horsham.gov.uk/__data/assets/pdf_file/0016/60190/Horsham-District-Planning-Framework-November-2015.pdf

Horsham District Council. (2022, August 19). *Water neutrality and planning applications*. Retrieved from Horsham District Council: https://www.horsham.gov.uk/planning/water-neutrality-in-horsham-district/water-neutrality-and-planning-applications

Jostec. (2021). *Water Efficiency Calculations*. Retrieved from https://jostec.co.uk/services/water-efficiency-calculations/

JRH Water Management. (2023). *JRH Water Management*. Retrieved from JRH Water Management: https://jrhwatermanagement.co.uk/

Natural England. (2021). *Water neutrality: Position statement and response.* Retrieved from Horsham District Council: https://www.horsham.gov.uk/__data/assets/pdf_file/0019/106552/Natural-Englands-Position-Statement-for-Applications-within-the-Sussex-North-Water-Supply-Zone-September-2021.pdf

Pemberton Park and Leisure Homes. (2023). *2023 Avon 30 x 12 2 bedrooms.* Retrieved from Pemberton Park and Leisure Homes.

RSPB. (2023). *Pullborough Brooks*. Retrieved from RSPB: https://www.rspb.org.uk/reserves-and-events/reserves-a-z/pulborough-brooks/

Southern Water. (2022). *Draft Water Resources Management Plan 2024.*

WaterSafe. (2023). *What is the minimum water pressure that a water supplier must supply?* Retrieved from WaterSafe: https://www.watersafe.org.uk/advice/common_plumbing_questions1/pressure/what_is_the_minimum_water_pressure_that_a_water_supplier_must_supply/

WaterWise. (2021). *Water Neutrality Practical Guidance*. Retrieved from WaterWise: https://database.waterwise.org.uk/knowledge-base/water-neutrality-practical-guidance-2021/

Appendix A

Water Bill - 20/05/2021

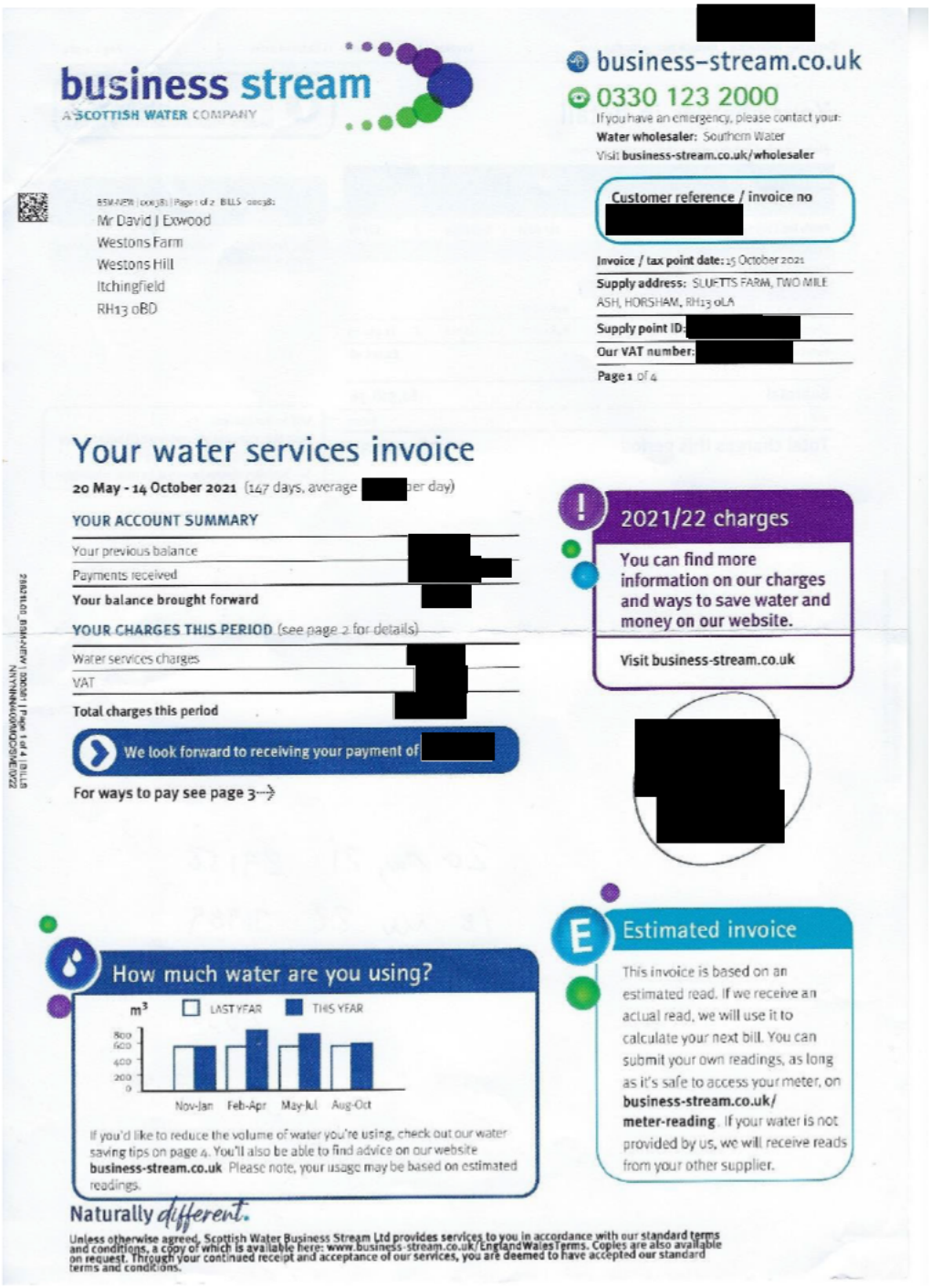

business stream
A SCOTTISH WATER COMPANY

[redacted]

business-stream.co.uk
0330 123 2000
If you have an emergency, please contact your:
Water wholesaler: Southern Water
Visit **business-stream.co.uk/wholesaler**

Mr David J Exwood
Westons Farm
Westons Hill
Itchingfield
RH13 0BD

Customer reference / invoice no [redacted]

Invoice / tax point date: 15 October 2021
Supply address: SLUFTTS FARM, TWO MILE ASH, HORSHAM, RH13 0LA
Supply point ID: [redacted]
Our VAT number: [redacted]
Page 1 of 4

Your water services invoice

20 May - 14 October 2021 (147 days, average [redacted] per day)

YOUR ACCOUNT SUMMARY

Your previous balance	[redacted]
Payments received	[redacted]
Your balance brought forward	[redacted]

YOUR CHARGES THIS PERIOD (see page 2 for details)

Water services charges	[redacted]
VAT	[redacted]
Total charges this period	[redacted]

We look forward to receiving your payment of [redacted]

For ways to pay see page 3→

2021/22 charges
You can find more information on our charges and ways to save water and money on our website.
Visit business-stream.co.uk

[redacted]

How much water are you using?

If you'd like to reduce the volume of water you're using, check out our water saving tips on page 4. You'll also be able to find advice on our website **business-stream.co.uk**. Please note, your usage may be based on estimated readings.

Estimated invoice
This invoice is based on an estimated read. If we receive an actual read, we will use it to calculate your next bill. You can submit your own readings, as long as it's safe to access your meter, on **business-stream.co.uk/meter-reading**. If your water is not provided by us, we will receive reads from your other supplier.

Naturally *different.*

Unless otherwise agreed, Scottish Water Business Stream Ltd provides services to you in accordance with our standard terms and conditions, a copy of which is available here: www.business-stream.co.uk/EnglandWalesTerms. Copies are also available on request. Through your continued receipt and acceptance of our services, you are deemed to have accepted our standard terms and conditions.

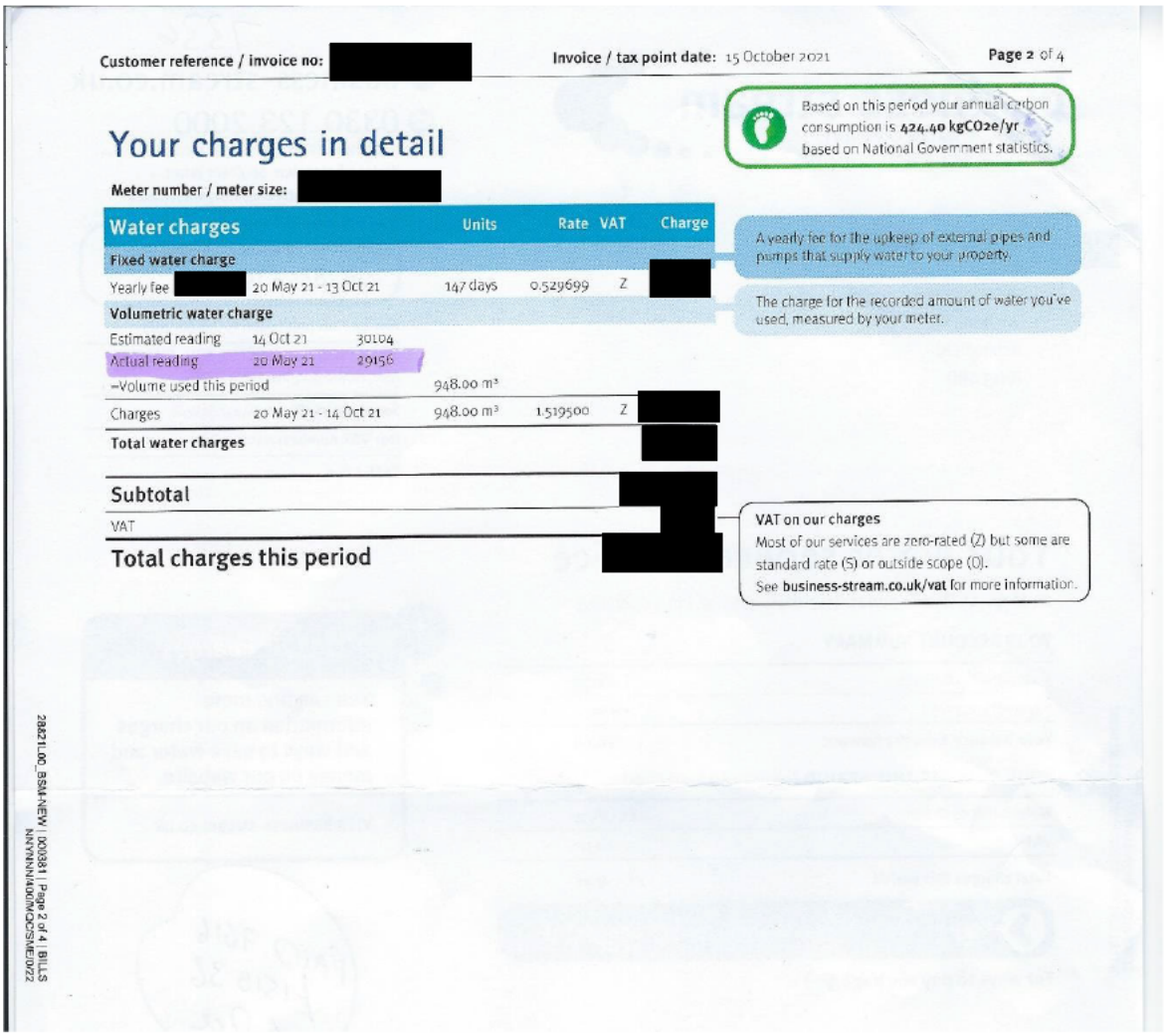

Customer reference / invoice no: [redacted]

Invoice / tax point date: 15 October 2021

Page 2 of 4

Based on this period your annual carbon consumption is **424.40 kgCO2e/yr** based on National Government statistics.

Your charges in detail

Meter number / meter size: [redacted]

Water charges			Units	Rate	VAT	Charge
Fixed water charge						
Yearly fee [redacted]	20 May 21 - 13 Oct 21		147 days	0.529699	Z	[redacted]
Volumetric water charge						
Estimated reading	14 Oct 21	30104				
Actual reading	20 May 21	29156				
–Volume used this period			948.00 m³			
Charges	20 May 21 - 14 Oct 21		948.00 m³	1.519500	Z	[redacted]
Total water charges						[redacted]

A yearly fee for the upkeep of external pipes and pumps that supply water to your property.

The charge for the recorded amount of water you've used, measured by your meter.

Subtotal	[redacted]
VAT	[redacted]
Total charges this period	[redacted]

VAT on our charges
Most of our services are zero-rated (Z) but some are standard rate (S) or outside scope (O).
See **business-stream.co.uk/vat** for more information.

28821L00_BSM-NEW | 000381 | Page 2 of 4 | BILLS
NNYNNN/400/MQCSME/0/22

Water Meter Reading - 27/03/2023



Appendix B

Toilet Specification

Atlas Trade

AT

SAKKARA CLOSE COUPLED PB CISTERN WITH FITTINGS



Product Code	SK2WHPCI
Weight (Kg)	14.2
Material	Vitreous china
Flushing Volume (L)	6/4
Flushing Mechanism	Dual Flush Flush Button
Inlet	RH Bottom Inlet
Cistern fittings included	Yes
Pre-Installed/Bagged	Pre-installed

Key features:

- UKCA compliant
- Smooth modern design
- Water saving option

Description:
A close coupled cistern with smooth lines, it's a family friendly easy clean cistern featuring dual flush push button operation. This cistern is designed to work on either 6/4 ltrs or 4/2.6 ltrs to aid in water saving.

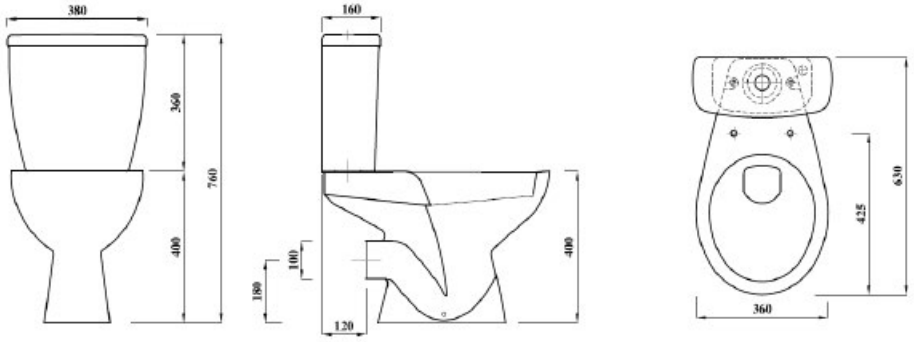

All dimensions are approximate and subject to normal ceramic variation. Although every effort is made not to change the above product specification, Lecico reserve the right to do so without prior notification if necessary. Lifetime ceramic guarantee against manufacturers defects. Full information on guarantees available upon request.

Lecico bathrooms

Kitchen Tap Specification

PEGLERFLOW

4J4011 – MONO SINK MIXER

Francis Pegler BY COMAP



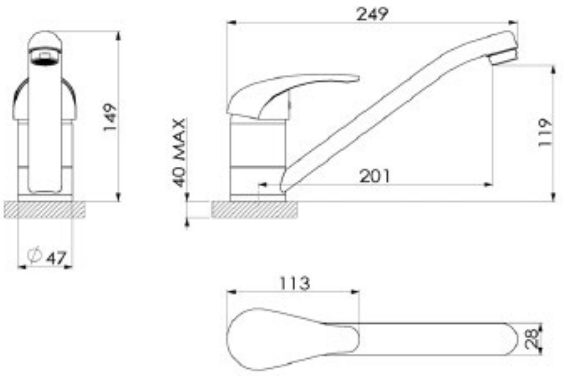

Specification	
Finish	Chrome
Body	Brass
Fittings	Metal plate, washer, stud & locking nut
Connection	M10 – DN8 flexible hoses with ½" BSP threaded ends
Min dynamic pressure	0.1
Max dynamic pressure	6
Max static pressure	16
Max water temperature	60°C

Flow rates				
Pressure	0.1	0.5	1	3
L/min	2.3	9.4	13.9	25.4

All Pressures are in Bar.

Dimensions supplied are nominal and subject to tolerance.

Inclusion of aerator (if supplied) or restrictors (sold separately unless stated) will affect flow rate result.

Performance details are based on trials under test conditions and for guidance only.

The Company reserves the right to change product specification without prior notice.

Features & Benefits

- 10 YEAR Guarantee
- L Low Pressure
- Flexible Hose
- Flow Straightener
- Flow Aerator
- Single Flow

Certifications

WRAS APPROVED PRODUCT	5.2 l/min
1804346 - April 23	*Tested at 0.2 bar*

COMAP UK Ltd. Unit C6, William Way, Moss Ind Est, St Helens Rd, Leigh. Lancashire. WN7 3PT
www.comaptaps.co.uk

aalberts

4J4011-PDS-V1

Shower Specification

SAGITTARIUS

TAPS & SHOWERING

Construction	Brass Body (CuZn38Pb1.8)
Finishes	Chrome plated to BS EN 248
Product Type	Contemporary
Water Pressure	Min. 0.5 bar, Max. 6.0 bar
Plumbing Systems	Suitable for all plumbing systems, preferably balanced.Min. supply pressure differential requirement is 5:1
Standards	Complies with BSEN 1111
Certification	Manufactured to comply with WRAS, TMV2
Cartridge	Thermostatic: Ceramic disc cartridge
Fitting	G1/2" BSP TAILS
Check valve	0.5-10 gpm
Packaging	38 x 22 x 29cm / carton (10 boxes / carton)
Guarantee	10 years against manufacturing faults. (excluding serviceable parts).
Additional Information	1.Temperature: Pre-set 38°C, with push button override to 48°C. 2.Automatic shut off in the event of hot or cold water supply failure.

MILAN VERTICAL EXPOSED SHOWER VALVE CHROME SH/163/C



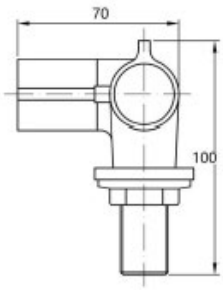

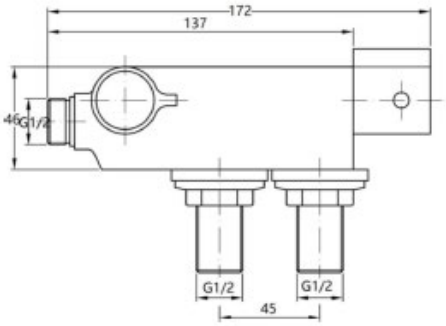

Flow Rates (Litres per minute)

System Pressure	0.1 Bar	0.2 Bar	0.3 Bar	0.5 Bar	1.0 Bar	1.5 Bar	2.0 Bar	3.0 Bar	4.0 Bar	5.0 Bar
SH/163/C	4.0	6.5		9.5	11.0	13.3	15.1	16.9		

The information contained on this page was correct at the date of issue. Fitting dimensions are provided as a guide only. Some variation may occur due to manufacturing tolerances. We pursue a policy of continuing improvement in design and performance of our products and so reserve the right to change specifications without prior notice

FOR FURTHER ADVICE PLEASE CONTACT :-
SAGITTARIUS LTD UNIT 1 LOWER VICTORIA STREET—CHADDERTON—OLDHAM—OL9 9TU TEL:0616 6202029
EMAIL:TECHNICAL@SAGITTARIUSTAPS.CO.UK

Bathroom Tap Specificaiton

TAPWARE

ETHOS

Ethos Mini Mono Basin Mixer

Product Code: ETH313

Finish: Chrome

Deva by METHVEN

Features

Construction:	Brass
Valve/Cartridge type:	Ceramic Cartridge
Supply:	Suitable for all plumbing systems
Working Pressures:	0.3 - 5.0 bar
Inlet connections:	½" BSP
Flexi or Copper:	Flexi Tails

- Ceramic Cartridge for smooth operation
- Tilt and turn temperature and flow control
- In full colour packaging

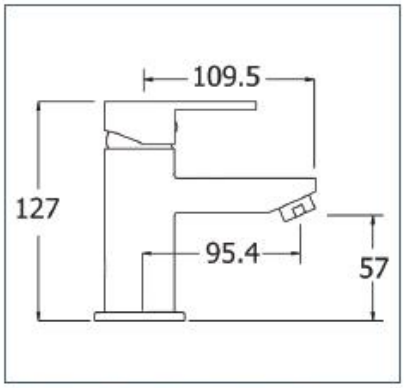



*Please refer to website for full warranty details.

Flow (Bar - l/min, open outlet)

Spout

Flow 0.1	Flow 0.3	Flow 0.5	Flow 1.0	Flow 2.0	Flow 3.0	Flow 4.0	Flow 5.0
2.8	4.7	5.9	8.1	11.3	14.1	16.1	18

kiwa 1912722

WRAS 1912307

12 YEAR GUARANTEE ON ALL DEVA CHROME TAPS *TERMS APPLY

www.deva-uk.com · 0800 195 1602 · sales@uk.methven.com

THE INFORMATION ON THIS SPECIFICATION DOCUMENT WAS CORRECT AT THE DATE OF ISSUE. SOME VARIATION MAY OCCUR DUE TO THE MANUFACTURING TOLERANCES AND SITE SPECIFIC CONDITIONS.

Appendix C

Rainwater Harvesting System Service Quote

JRH water management

Home Close
East Firsby
Market Rasen
Lincolnshire
LN8 2DB

Date:13/01/2021

To

Christ's Hospital
The Counting House
Christs Hospital
Horsham
West Sussex
RH13 0TL
Site - Westons Barn Farm
RH13 0BD
Francis Pulvermacher
[redacted]

Salesperson	Job	Payment Terms	Due Date
MICHAEL JORDEN	Rainwater Harvesting System – Estimate	[redacted]	

Qty	Description	Unit Price	Line Total
Overview	To supply and install RWH system to sites – based on information provided - • RWH system to be installed to barn – taking total roof area • Splitting roof into two system – 1 x side for one system, valley and other side second system • Overflows – to 1 x drain back right corner – assuming 6" drain? • Tanks sited as per picture at bottom of estimate • Due to front valley outlet not being able to be taken across due to doors based on this outlet being blocked to make water run to back outlet • All based on pipework for both systems being installed to timber boarding on siding of shed		
RWH SYSTEM	Valley and side system Roof – 1012m2 roof size with average rainfall per year of 850mm with the filters working at 90% of water going to tanks gives – 774,180L per year going to store average per system 25mm of rainfall on the roof will collect to tanks – 22,700L • 3 x 22,000L NP tank with 2" outlets and fxf taps • 2 x tank link kits • 1 x Wall mounted filter set with mount brackets • 160mm & 110mm pipe, fittings & clips in black • 6x2 treated timber for filter frame supports • 1 x Mechanical tank water level gauge • Labour for x2 to install inc all screws, glues etc to complete works Side system Roof – 337m2 roof size with average rainfall per year of 850mm with the filters working at 90% of water going to tanks gives – 257,805L per year going to store average per system 25mm of rainfall on the roof will collect to tanks – 7582L	[redacted]	[redacted]

	• 1 x 22,000L NP tank with 2" outlets and fxf taps • 1 x Wall mounted filter set with mount brackets • 110mm pipe, fittings & clips in black • 6x2 treated timber for filter frame supports • 1 x Mechanical tank water level gauge • Labour for x2 to install inc all screws, glues etc to complete works		
PLEASE NOTE	• Recommended - Base of 4m x 12m for tanks x 3 and 4m x 4m for 1 x tank • Full access inside and outside of shed for duration of works • Tanks will need to be offloaded and put in location – telehandler needed with driver at all locations • Rubbish removal by customer		
		Subtotal	[redacted]
		VAT 20%	[redacted]
		Total	[redacted]

TERMS:
ALL PRICING IS VALID FOR 30 DAYS FROM DATE OF QUOTATION
JRH RESERVE THE RIGHT TO AMEND PRICES SHOULD SUBSEQUENT INFORMATION BE AT VARIANCE TO THE SPECIFICATION RECIEVED
PAYMENT TERMS AS PER ABOVE AND FINAL PAYMENT DUE WITHIN 48HRS OF JOB COMPLETION
JRH DO NOT GUARANTEE THE QUALITY OF THE EXISTING PIPE WORK AND CANNOT BE HELD RESPONSIBLE FOR ANY LEAKS CAUSED THROUGH DEFECTS IN THIS PIPE WORK
ALL MATERIALS REMAIN THE PROPERTY OF JRH WATER MANAGEMENT UNTIL FULL PAYMENT IS RECEIVED

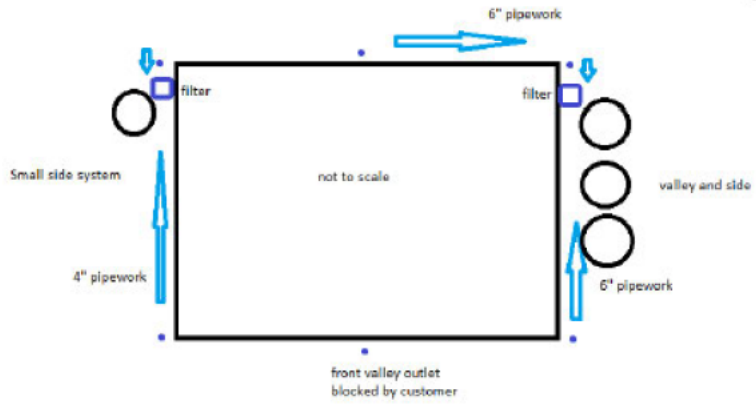

Appendix B – Decision Notice

Horsham District Council

Mr James Callaway
Savills
Mocatta House, Fifth Floor
Trafalgar Place
Brighton
BN1 4DU

Sluetts Farm Buildings Two Mile Ash Horsham West Sussex
Erection of temporary agricultural workers dwelling.

Your application DC/23/0306 has now been determined and I enclose the decision notice. The decision notice contains important information. Please take a moment to read it as further action may be required.

Conditions
Before you start work, information must be submitted for any conditions that require discharge before development can begin. The decision notice will set out what information need to be sent.

Failure to discharge conditions before commencing development could result in the development being unlawful or enforcement action being taken. You can notify us of your intention to initiate development by completing a pre-commencement notification which will help us to monitor your development. There is no fee to use this service. To do this, or for further information about discharging planning conditions, visit us online at horsham.gov.uk/planning/discharging-a-planning-condition

Community Infrastructure Levy (CIL)
If this development is CIL liable, the requirements of CIL must be met before you start work. Failure to do so could result in additional financial penalties. For further information relating to CIL visit horsham.gov.uk/planning/planning-policy/community-infrastructure-levy/cil-charges-and-how-to-pay

If you have any questions about the decision notice, you can call us and speak to a member of the team on 01403 215187 between 9AM - 5PM, Monday to Friday.

If you are acting as the planning agent for this application, please ensure that the applicant is given a copy of the decision notice and this letter.

Yours Sincerely,
Development Management

Horsham District Council

Mr James Callaway
Savills
Mocatta House, Fifth Floor
Trafalgar Place
Brighton
BN1 4DU

Application Number: DC/23/0306

TOWN AND COUNTRY PLANNING ACT, 1990 (as amended)
TOWN AND COUNTRY PLANNING (Development Management Procedure) (England) Order 2015

On behalf of: Mr Francis Pulvermacher Christ's Hospital

In pursuance of their powers under the above-mentioned Act and Order, the Council hereby notify you that they PERMIT the following development, that is to say:

Erection of temporary agricultural workers dwelling.

Sluetts Farm Buildings Two Mile Ash Horsham West Sussex

to be carried out in accordance with Application No. DC/23/0306 submitted to the Council on 20/02/2023 and subject to compliance with the plans/documents and conditions specified hereunder.

Emma Parkes
Head of Development and Building Control

Date: 23/02/2024

1 **Plans Condition**: The development hereby permitted shall be carried out in accordance with the approved plans listed in the schedule below.

SCHEDULE OF PLANS/DOCUMENTS

Plan Type	Description	Drawing Number	Received Date
Supporting Docs	Appendix 2a ANOB and NP	NONE	20.02.2023
Supporting Docs	Appendix 2b - Nitrate Vulnerable Zones	NONE	20.02.2023
Supporting Docs	Appendix 2c - SSSI	NONE	20.02.2023
Supporting Statement	Temporary Agricultural Workers Dwelling Appraisal	NONE	20.02.2023
Supporting Statement	Preliminary Ecological Appraisal	NONE	20.02.2023
Block plan	Existing	4 002	20.02.2023
Site plan	Existing	4 003 REV A	20.02.2023

Elevation & Floor plan		4 1010	20.02.2023
Supporting Docs	Appendix 1	NONE	20.02.2023
Supporting Statement		REV 4	03.05.2023
Location plan		4 001 REV A	24.04.2023
Site plan		4 100 REV B	25.04.2023

Reason: For the avoidance of doubt and in the interest of proper planning.

2 **Temporary Time Condition**: The temporary agricultural workers dwelling hereby permitted shall be removed and the land shall be restored on or before the 23.02.2027, to a condition which has been previously agreed in writing by the Local Planning Authority.

Reason: The proposed development is not considered satisfactory as a permanent measure in accordance with Policy 33 of the Horsham District Planning Framework (2015).

3 **Pre-Commencement Condition**: No development shall commence until a drainage strategy detailing the proposed means of foul and surface water disposal has been submitted to and approved in writing by the Local Planning Authority. The development shall be carried out in accordance with the approved scheme.

Reason: As this matter is fundamental to ensure that the development is properly drained and to comply with Policy 38 of the Horsham District Planning Framework (2015).

4 **Pre-Commencement (Slab Level) Condition**: No development shall commence until a Biodiversity Enhancement Strategy for Protected and Priority species has been submitted to and approved in writing by the local planning authority. The content of the Biodiversity Enhancement Strategy shall include the following:

a) Purpose and conservation objectives for the proposed enhancement measures;
b) detailed designs to achieve stated objectives;
c) locations of proposed enhancement measures by appropriate maps and plans;
d) persons responsible for implementing the enhancement measures;
e) details of initial aftercare and long-term maintenance (where relevant).

The works shall be implemented in accordance with the approved details and shall be retained in that manner thereafter.

Reason: As these matters are fundamental to safeguard the ecology and biodiversity of the area in accordance with Policy 31 of the Horsham District Planning Framework (2015), and to enhance Protected and Priority Species/habitats and allow the Local Planning Authority to discharge its duties under the s40 of the NERC Act 2006 (Priority habitats & species).

5 **Pre-Commencement (Slab Level) Condition**: No development above ground floor slab level of any part of the development hereby permitted shall take place until a schedule of materials and finishes and colours to be used for external walls, windows and roofs of the approved building(s) has been submitted to and approved by the Local Planning Authority in writing and all materials used in the construction of the development hereby permitted shall conform to those approved.

Reason: As this matter is fundamental to enable the Local Planning Authority to control the development in detail in the interests of amenity by endeavouring to achieve a building of

visual quality in accordance with Policy 33 of the Horsham District Planning Framework (2015).

6 **Pre-commencement (slab level) Condition**: No development above ground floor slab level shall commence until full details of the water efficiency measures and rainwater/greywater harvesting system required by the approved water neutrality strategy (Savills received by the Council on 03.05.2023) have been submitted to and approved in writing by the Local Planning Authority. The rainwater harvesting system shall include suitable storage tanks to provide a minimum 35 days storage capacity.

Reason: To ensure the development is water neutral to avoid an adverse impact on the Arun Valley SACSPA and Ramsar sites in accordance with Policy 31 of the Horsham District Planning Framework (2015), Paragraphs 179 and 180 of the National Planning Policy Framework (2021), and to enable the Local Planning Authority to discharge its duties under the Conservation of Habitats and Species Regulations 2017 (as amended), and s40 of the NERC Act 2006 (Priority habitats & species).

7 **Pre-Occupation Condition**: No dwelling hereby permitted shall be first occupied until evidence has been submitted to and been approved in writing by the Local Planning Authority that the approved water neutrality strategy for that dwelling has been implemented in full. The evidence shall include the specification of fittings and appliances used, evidence of their installation, details of the rainwater harvesting system installed including a minimum 35 days storage capacity, and completion of the as built Part G water calculator or equivalent. The installed measures shall be retained as such thereafter.

Reason: To ensure the development is water neutral to avoid an adverse impact on the Arun Valley SACSPA and Ramsar sites in accordance with Policy 31 of the Horsham District Planning Framework (2015), Paragraphs 179 and 180 of the National Planning Policy Framework (2021), and to enable the Local Planning Authority to discharge its duties under the Conservation of Habitats and Species Regulations 2017 (as amended), and s40 of the NERC Act 2006 (Priority habitats & species).

8 **Pre-Occupation Condition**: No part of the development hereby permitted shall be first occupied until full details of all hard and soft landscaping works shall have been submitted to and approved, in writing, by the Local Planning Authority. The details shall include plans and measures addressing the following:

- Details of all existing trees and planting to be retained
- Details of all proposed trees and planting, including schedules specifying species, planting size, densities and plant numbers and tree pit details
- Details of all hard surfacing materials and finishes
- Details of all boundary treatments

The approved landscaping scheme shall be fully implemented in accordance with the approved details within the first planting season following the first occupation of any part of the development. Unless otherwise agreed as part of the approved landscaping, no trees or hedges on the site shall be wilfully damaged or uprooted, felled/removed, topped or lopped without the previous written consent of the Local Planning Authority until 5 years after completion of the development. Any proposed or retained planting, which within a period of 5 years, dies, is removed, or becomes seriously damaged or diseased shall be replaced in the next planting season with others of similar size and species unless the Local Planning Authority gives written consent to any variation.

Reason: To ensure a satisfactory development that is sympathetic to the landscape and townscape character and built form of the surroundings, and in the interests of visual amenity in accordance with Policy 33 of the Horsham District Planning Framework (2015).

9 **Pre-Occupation Condition**: No part of the development hereby permitted shall be occupied until details for the provision for the storage of refuse and recycling facilities have been submitted to and approved in writing by the Local Planning Authority. These facilities shall be provided prior to occupation (or use) of the development hereby permitted and thereafter be retained for use at all times.

Reason: To ensure the adequate provision of recycling facilities in accordance with Policy 33 of the Horsham District Planning Framework (2015).

10 **Regulatory Condition**: No works relating to the construction of the development hereby approved shall take place outside of 08:00 hours to 18:00 hours Mondays to Fridays and 08:00 hours to 13:00 hours on Saturdays nor at any time on Sundays, Bank or public Holidays, unless otherwise agreed in writing by the Local Planning Authority.

Reason: To safeguard the amenities of adjacent occupiers in accordance with Policy 33 of the Horsham District Planning Framework (2015).

11 **Regulatory Condition**: The development hereby permitted shall be undertaken in strict accordance with the ecological mitigation and enhancement measures set out in the Preliminary Ecological Appraisal Tabulated Report (Bakerwell, November 2022).

This may include the appointment of an appropriately competent person e.g. an ecological clerk of works (ECoW) to provide on-site ecological expertise during construction. The appointed person shall undertake all activities, and works shall be carried out, in accordance with the approved details.

Reason: As these matters are fundamental to safeguard the ecology and biodiversity of the area in accordance with Policy 31 of the Horsham District Planning Framework (2015), and to enhance Protected and Priority Species/habitats and allow the Local Planning Authority to discharge its duties under the s40 of the NERC Act 2006 (Priority habitats & species).

12 **Regulatory Condition**: If, during development, contamination not previously identified is found to be present at the site then no further development shall be carried out until a remediation strategy has been submitted to and approved by the local planning authority detailing how this unsuspected contamination shall be dealt with. The remediation strategy shall be implemented as approved.

Reason: To ensure that no unacceptable risks are caused to humans, controlled waters or the wider environment during and following the development works and to ensure that any pollution is dealt with in accordance with Policies 24 and 33 of the Horsham District Planning Framework (2015).

13 **Regulatory Condition**: No external lighting or floodlighting shall be installed other than with the permission of the Local Planning Authority by way of formal application.

Reason: In the interests of the amenities of the locality and in accordance with Policy 33 of the Horsham District Planning Framework (2015).

Note to Applicant – Community Infrastructure Levy (CIL):
Horsham District Council has adopted a Community Infrastructure Levy (CIL) Charging Schedule which took effect on 1st October 2017. **This development constitutes CIL liable development**.

If you have not received a Liability Notice from the Council within 1 month of the decision date please contact the CIL Team at cil@horsham.gov.uk

CIL is a mandatory financial charge on development. To avoid additional financial penalties, the requirements of CIL must be managed before development is commenced (including in the event of any successful appeal).

Payment must be made in accordance with the requirements of the CIL Demand Notice issued.

Note to Applicant
Statement pursuant to Article 35 of the Town and Country Planning (Development Management Procedure) (England) Order 2015. The Local Planning Authority has acted positively and proactively in determining this application by assessing the proposal against all material considerations, including planning policies and any representations that may have been received, in order to be able to, where possible, grant permission.

ADDITIONAL INFORMATION

Planning Permission – Important Provisos
If planning permission has been granted, please note that your Notice of Decision refers only to consideration of your proposal under the Town and Country Planning Acts. It is not a building regulations approval and does not mean that you can disregard other Acts of Regulations, or avoid any other legal obligations. Some of these obligations, of particular relevance to your proposal are referred to elsewhere in this note. Before you proceed with your proposal you should ensure that a Building Control application is not required, or has been submitted. The Building Control Department can be contacted on 01403 215151.

If this permission relates to new dwellings, commercial premises or other buildings which will require a new postal address you should contact the Council's Street Naming & Numbering Department as soon as possible or before work commences on site. Further details are available on the Street Naming page on the Council's website or alternatively e-mail streetnaming@horsham.gov.uk or telephone 01403 215139.

It is the responsibility of the developer to provide bins for the development. If you are a developer and need to purchase bins, please email hop.oast.admin@horsham.gov.uk.

It must be stressed that the information included on this Notice of Decision may not include all your legal obligations, and it does not grant you rights to carry out works on or over lands, or to access land that is not within your control or ownership.

Amendments
Should alterations or amendments be required to the approved plans, it will be necessary to apply either under Section 96A of the Town and Country Planning Act 1990 for non material alterations, or under Section 73 of the Act for minor material alterations. An application must be made using the standard application form and you should consult with us, to establish the correct type of application to be made.

Monitoring
Horsham District Council monitors the implementation of planning permissions. Please be aware that monitoring officers may visit the application site at various stages of the development to ensure compliance with the approved plans and conditions.

Right of Appeals
If you are aggrieved by the decision to refuse permission for the proposed development or to grant it subject to conditions, then you can appeal to the Secretary of State under Section 78 of the Town and Country Planning Act 1990.

You must appeal within 12 weeks of the date of the decision notice for a householder application or 'minor commercial' (shop front) development, and within 6 months for other types of planning applications. There are different timescale – usually 28 days – if an enforcement notice is/has been served for the same (or very similar) land and development. Please note, only the applicant possesses the right of appeal.

Appeals can be made online at: https://www.gov.uk/planning-inspectorate. If you are unable to access the online appeal form, please contact the Planning Inspectorate to obtain a paper copy of the appeal form on tel: 0303 444 5000.

The Secretary of State can allow a longer period for giving notice of an appeal but will not normally be prepared to use this power unless there are special circumstances which excuse the delay in giving notice of appeal.

The Secretary of State need not consider an appeal if it seems to the Secretary of State that the local planning authority could not have granted planning permission for the proposed development or could not have granted it without the conditions they imposed, having regard to the statutory requirements, to the provisions of any development order and to any directions given under a development order.

If you intend to submit an appeal that you would like examined by inquiry then you must notify the Local Planning Authority and Planning Inspectorate (inquiryappeals@planninginspectorate.gov.uk) at least 10 days before submitting the appeal. Further details are at https://www.gov.uk/government/collections/casework-dealt-with-by-inquiries.