Gossland Farm Existing elevations

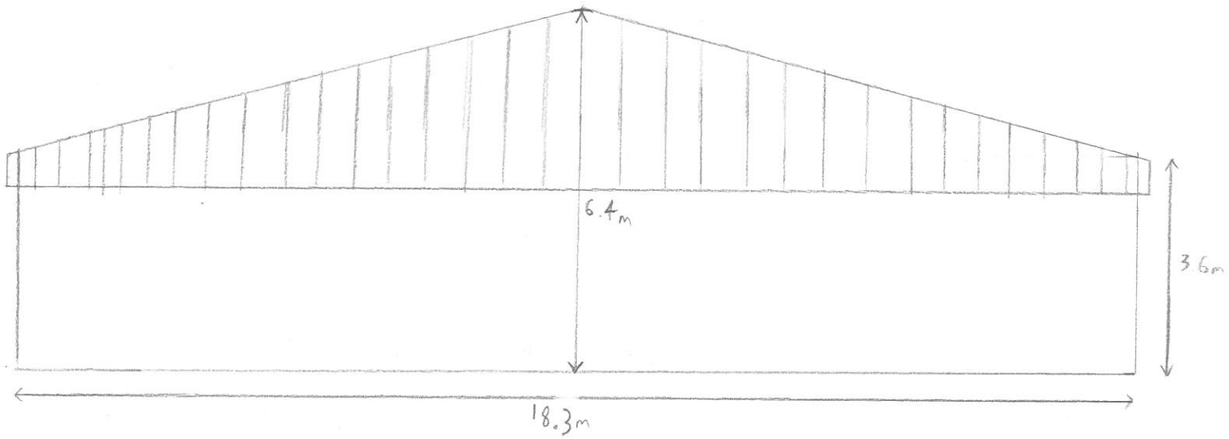

Western Elevation

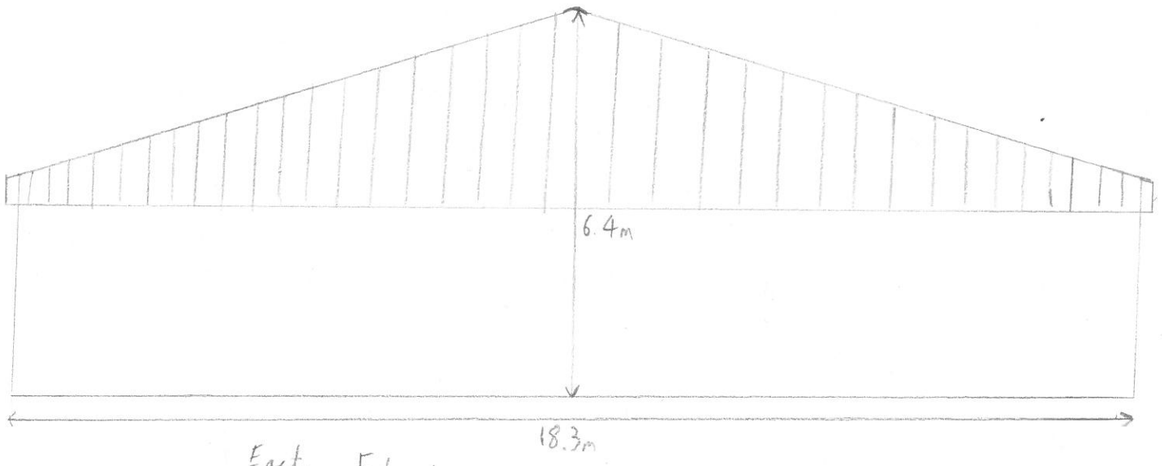

Eastern Elevation

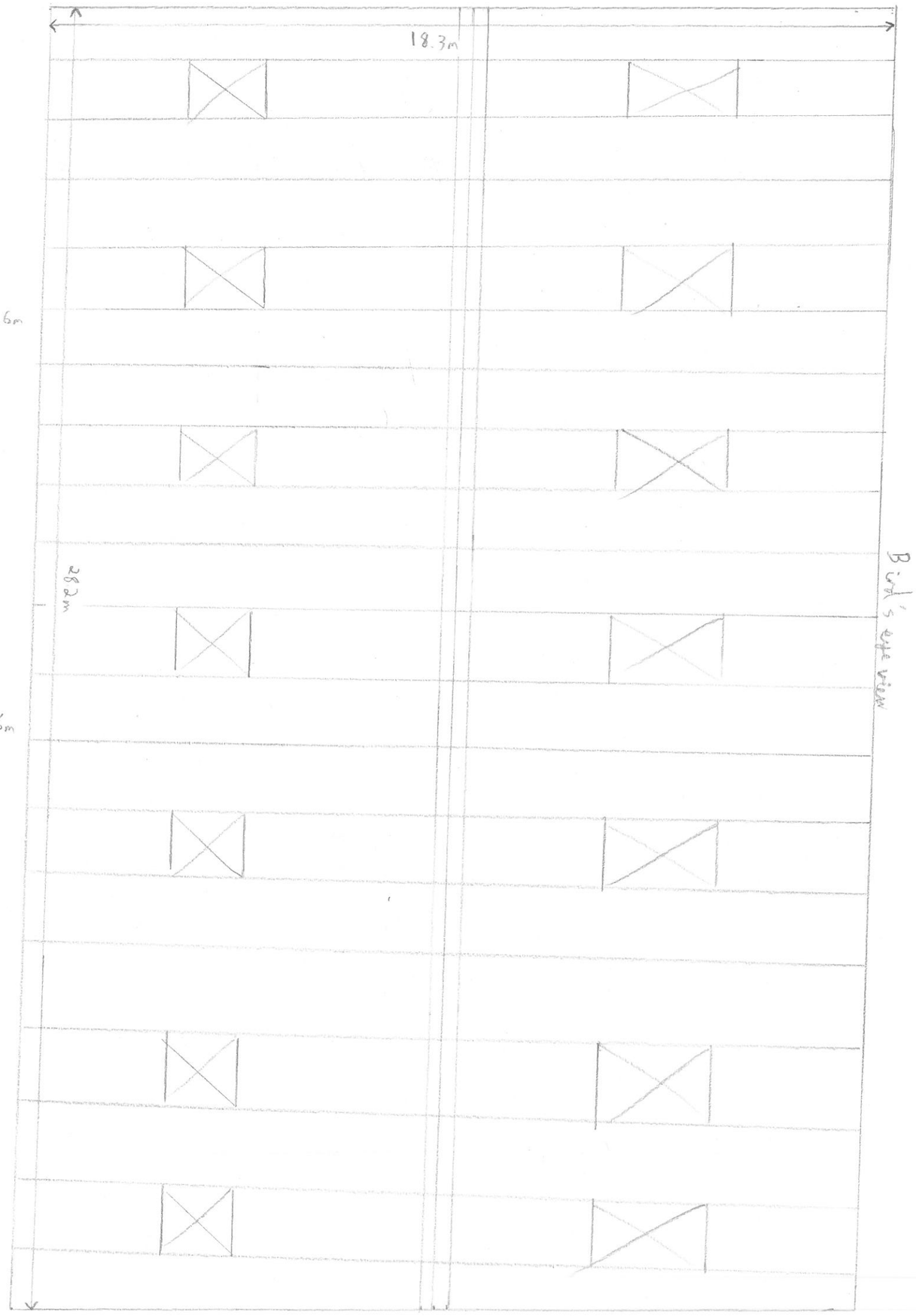



1:100