TYPICAL NEW WINDOW WITHIN EXISTING OPENING: DETAIL

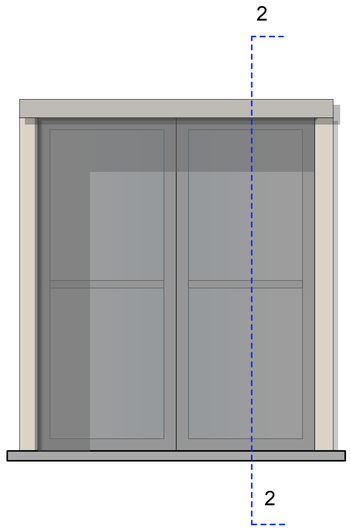

1 31-601 Window Elevation
Scale 1:10 @ A1

Detail 5

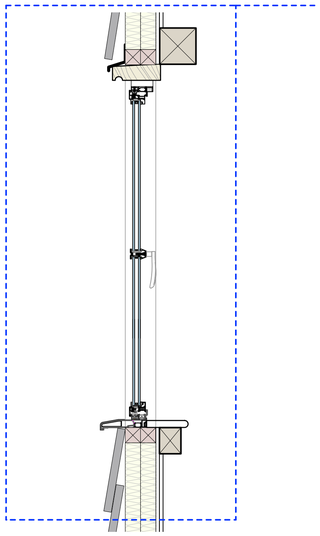

2 31-601 Window Section
Scale 1:20 @ A1

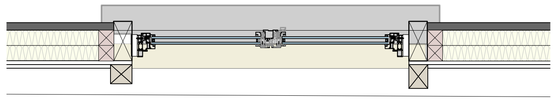

3 31-601 Window Plan
Scale 1:10 @ A1

0 0 1 2 M

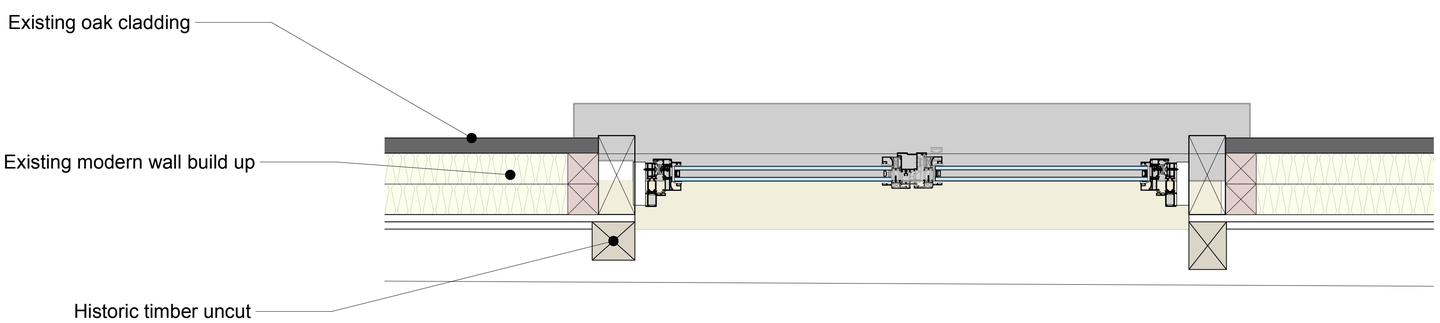

4 31-601 Window Plan Detail
Scale 1:5 @ A1

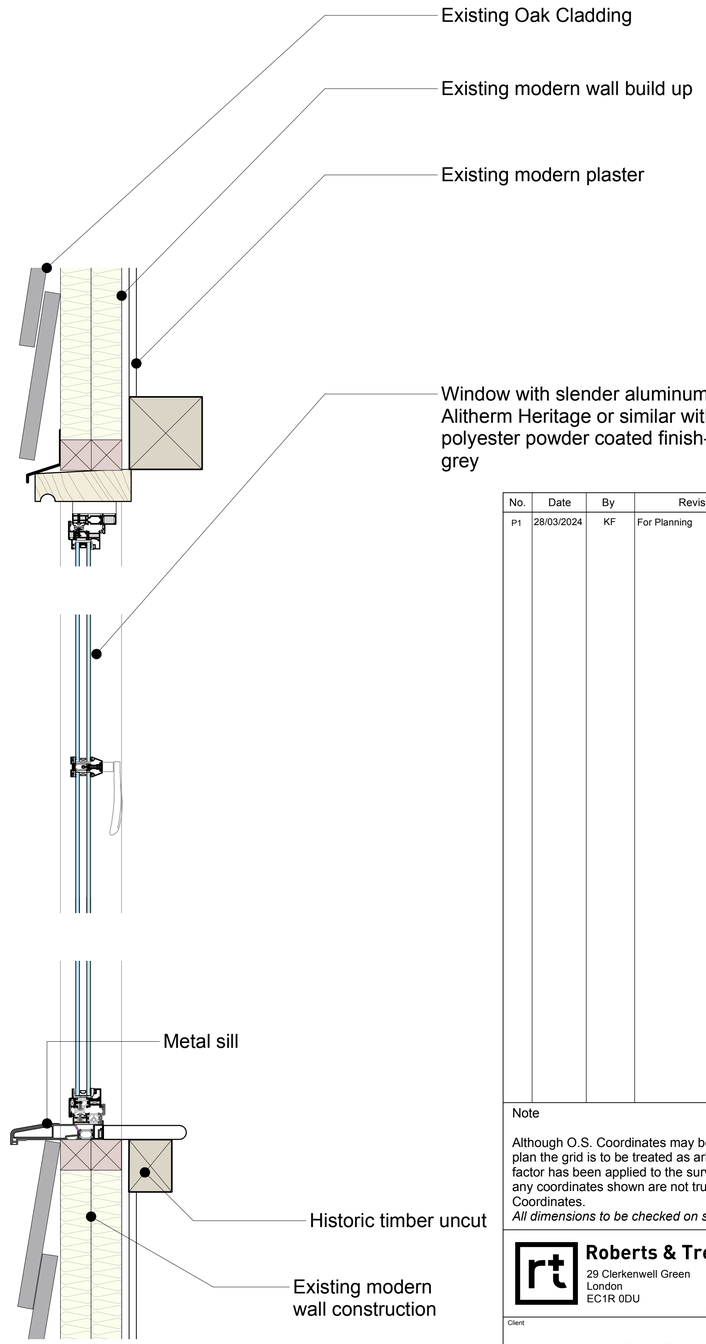

5 31-601 Window Section Detail
Scale 1:5 @ A1

0 0 1 M

No.	Date	By	Revision Notes
P1	28/03/2024	KF	For Planning

Note

Although O.S. Coordinates may be shown on this plan the grid is to be treated as arbitrary. No scale factor has been applied to the survey therefore the any coordinates shown are not true O.S. Coordinates.
All dimensions to be checked on site

Roberts & Treguer
29 Clerkenwell Green
London
EC1R 0DU

© Roberts and Treguer ltd

Client
Hope Farm, The Haven
Near Billingshurst
RH14 9BN

Project Title
Hope Farm

Sheet Title
Typical New Window

Drawn By	Project ID
JT	2201
Reviewed By	Scale
KF	As shown @ A1. Scale @ is A3 is 2x
Date	Sheet No.
28/03/2024	2201-DR-BH-31-601