REV:-

DATE

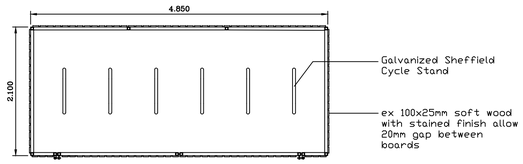

Bike Store – Plan View
Scale 1:50 @ A1

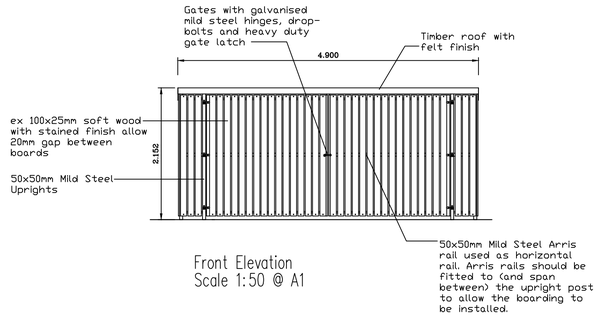

Front Elevation
Scale 1:50 @ A1

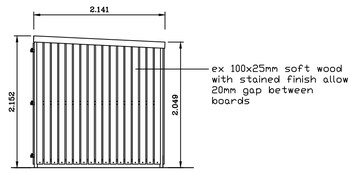

Side Elevation
Scale 1:50 @ A1

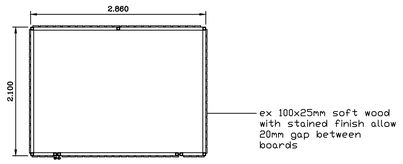

Bin Store – Plan View
Scale 1:50 @ A1

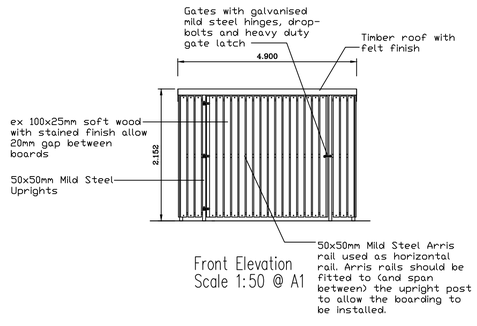

Front Elevation
Scale 1:50 @ A1

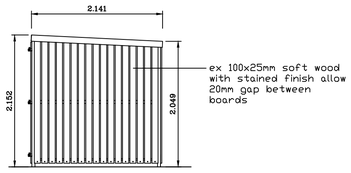

Side Elevation
Scale 1:50 @ A1

PROJECT:
84 High Street,
Billingshurst, RH14 9QS

TITLE:
Bin and Cycle Store Details

SCALE: As Shown

DATE: Oct 2025

Drawing No. 1456-05

REV.

BRELEY DESIGN LTD

Breley Design Ltd, Harrier House
Aviation Way, Southend on Sea
Essex SS2 6UN, England.
Telephone: +44 (0)1702 541300
Facsimile: +44 (0)1702 543123
Email: info@breleydesign.com

Copyright of this drawing shall remain the property of Breley Design Limited. It may not be used in whole or part by any other parties for any other purpose without prior consent.
All dimensions to be checked on site and any discrepencies reported to Breley Design Limited before work commences.