Noise Assessment

Air Source Heat Pump System for St Mary's C of E Primary School

V2 - July 2025

The Project

St Mary's C of E Primary School, located in Pulborough, West Sussex, is part of the Diocese of Chichester. In line with Church of England net zero targets, the Diocese of Chichester are undertaking a heat decarbonisation project across three schools. ReEnergise supported the Diocese of Chichester in making a grant application to Salix for funding via the Public Sector Decarbonisation Scheme (PSDS). This grant will help fund the installation of an air source heat pump (ASHP) system, along with improvements to roof insulation.

Proposed ASHP Units

For heating of the main building, two Viessmann Vitocal 200-A 64 kW ASHP units are proposed to be installed at St Mary's C of E Primary School are, as shown in Figure 1 below.

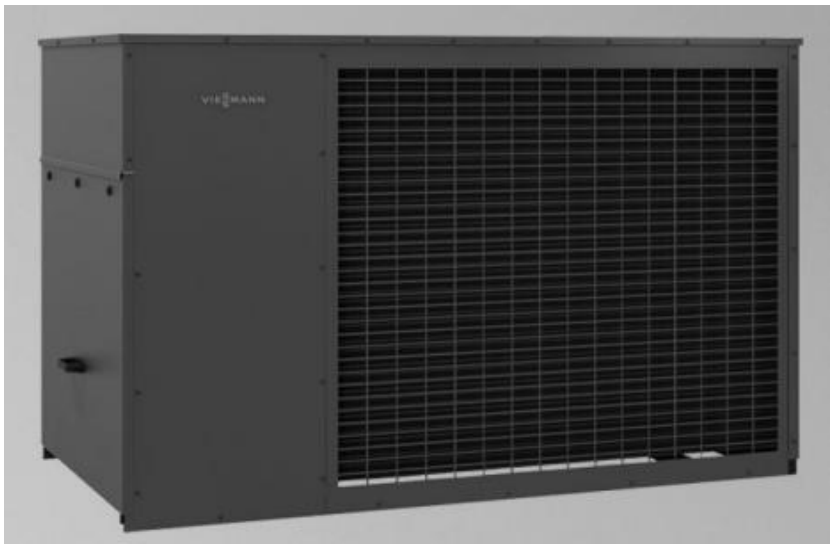

Figure 1: Viessmann Vitocal 200-A ASHP

The dimensions of the Viessman units are:

- Length 1330 mm
- Width 2315 mm
- Height 1510 mm.

The ASHP that is proposed to be installed to heat the pool is an Astral Pro Elyo Touch 35 kW unit, as shown in Figure 2.

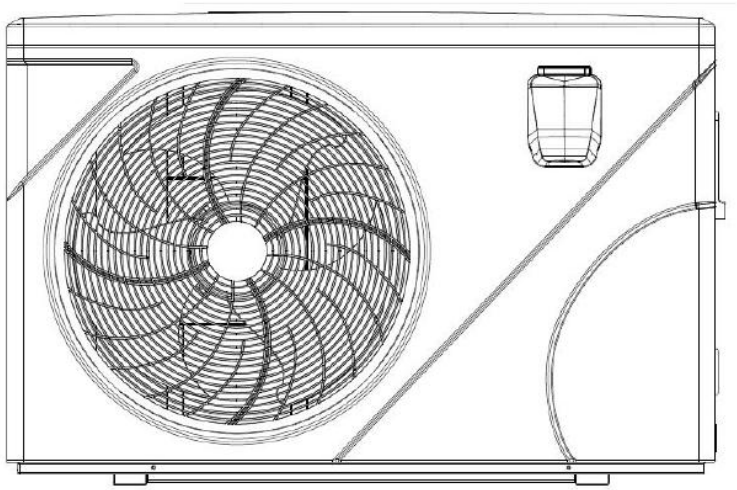

Figure 2: Astral Pro Elyo Touch ASHP unit

The dimensions of the Astral Pro Elyo Touch unit are:

- Length 420 mm
- Width 1079 mm
- Height 1285.9 mm.

Proposed position of ASHPs

Figure 3 below shows the proposed location of the main building and pool ASHP units.

The main building units are planned to be located to the rear of the school behind mesh security fencing and adjacent to an existing shed.

The planned position of the pool ASHP unit is to the north of the existing pool plant room and will be covered by a cage.

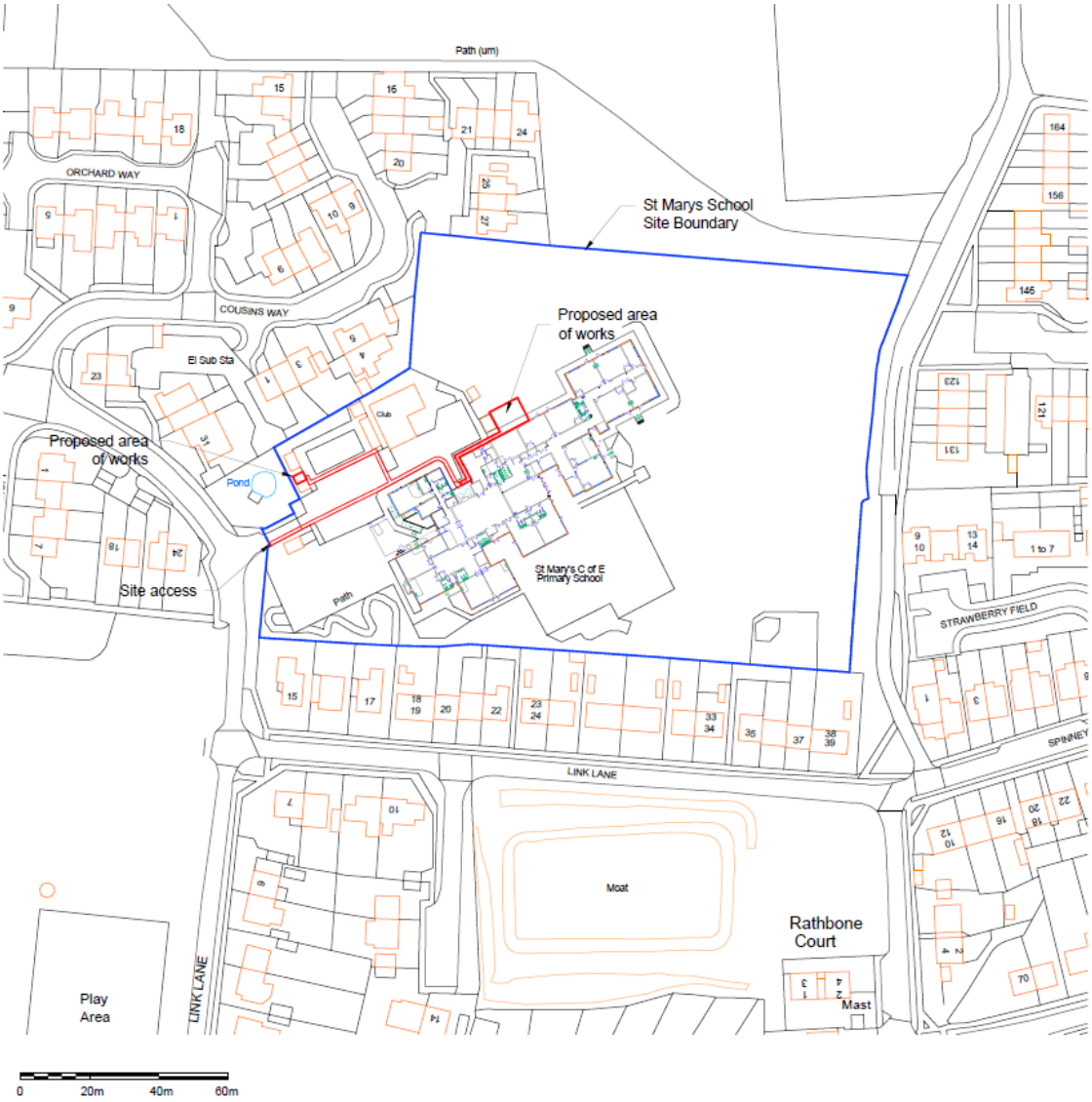

Figure 3: Proposed location of the main building and pool ASHPs

Figure 4 shows the proposed location of the main building ASHP units. Figure 5 shows the proposed location of the pool ASHP unit.



Figure 4: Proposed location of the main building ASHP units



Figure 5: Proposed location of the pool ASHP unit

ASHP Operation

The purpose of the ASHPs is to provide space heating in the main building and water heating for the pool. The main building units will primarily operate during school hours and for a few hours in the morning before the school opens; during the night they will run in silent mode and set to 5000 Hz. Only one unit will be required to operate at any one time, except in the coldest weather.

The pool unit will operate in the summer months only when the pool is in use.

Nearest Residential Properties

The closest property to the proposed location of the main building ASHPs is 4 Cousins Way, which is 42 m from the main building ASHP units at its nearest point. The pool ASHP unit is 22m from 1 Cousins Way at its nearest point.

Noise Data

The Viessmann technical manual has been used to provide the operating sound power level for the Viessmann Vitocal 200-A-64, as shown in Figure 6.

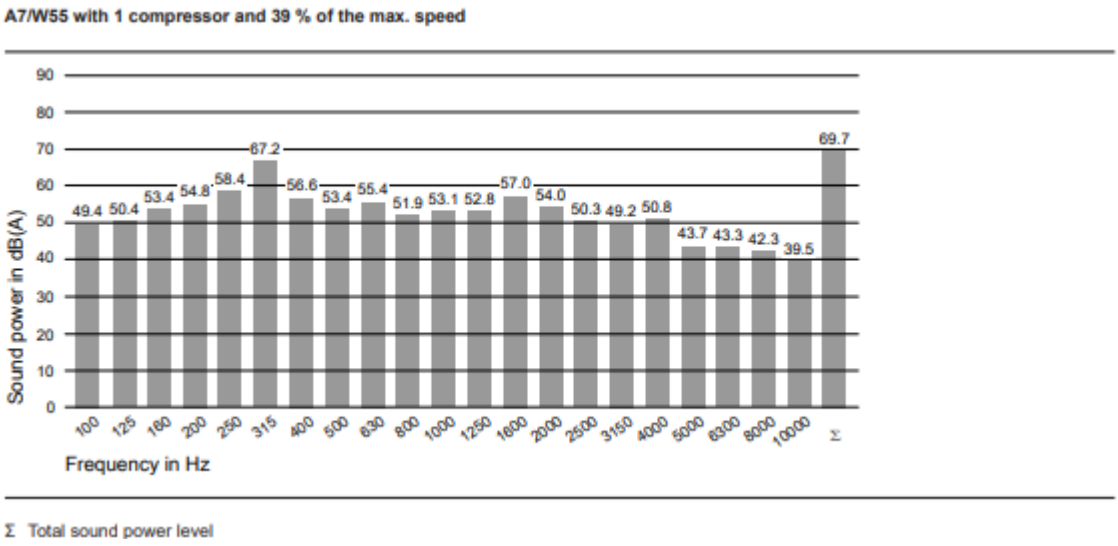

Figure 6: Viessman Vitocal 200-A-64 sound power level

Design information (cont.)

Q=8: Heat pump close to an external wall of the building, next to a projecting wall corner

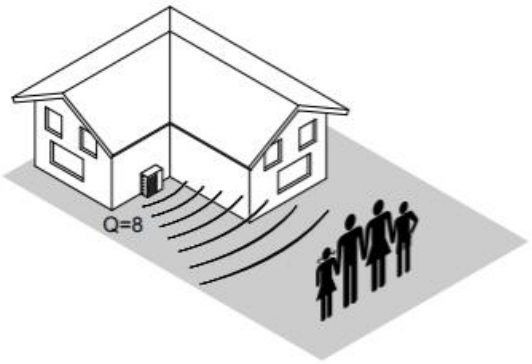

The following table shows the extent to which the sound pressure level L_P changes according to directivity Q and the distance from the appliance in relation to the sound power level L_W measured directly at the appliance or at the air diffuser.

The values listed in the table were calculated according to the following formula:

$$L = L_W + 10 \cdot \log\left(\frac{Q}{4 \cdot \pi \cdot r^2}\right)$$

L = Sound level at the receiver
L_W = Sound power level at the sound source
Q = Directivity
r = Distance between receiver and sound source

The legal requirements concerning sound propagation apply under the following idealised conditions:

- The sound source is a point source of sound.
- Installation and operating conditions for the heat pump correspond to the conditions when determining the sound power.
- At Q = 2, sound is emitted in a free field, no surrounding reflective objects/buildings.
- At Q = 4 and Q = 8, full reflection on adjacent surfaces is assumed.
- Unrelated noise from other surrounding sources is not taken into account.

Directivity Q, calculated on site	Distance from the sound source in m								
	1	2	4	5	6	8	10	12	15
	Energy-equivalent duration of sound pressure level L_P of the heat pump in relation to the sound power level L_W measured at the appliance/air duct in dB(A)								
2	–8.0	–14.0	–20.0	–22.0	–23.5	–26.0	–28.0	–29.5	–31.5
4	–5.0	–11.0	–17.0	–19.0	–20.5	–23.0	–25.0	–26.5	–28.5
8	–2.0	–8.0	–14.0	–16.0	–17.5	–20.0	–22.0	–23.5	–25.5

Fan speed	Sound power level L_W in dB(A)	Directivity Q	Distance from the outdoor unit in m								
			1	2	4	5	6	8	10	12	15
			Sound pressure level L_p in dB(A)								
Night	59	2	51	45	39	37	35	33	31	29	27
		4	54	48	42	40	38	36	34	32	31
		8	57	51	45	43	41	39	37	35	34
Max.	66	2	58	52	46	44	42	40	38	36	34
		4	61	55	49	47	45	43	41	39	38
		8	64	58	52	50	48	46	44	42	41

At 15m away from the unit in night mode the units have a sound pressure level of 27 dB(A). The residential properties are 42m away.

The Astral Pro Elyo Touch technical manual states that the unit creates 42 to 60 dB(A) at 1m from the unit.