PROPOSED



FRONT/NORTH ELEVATION
1:100

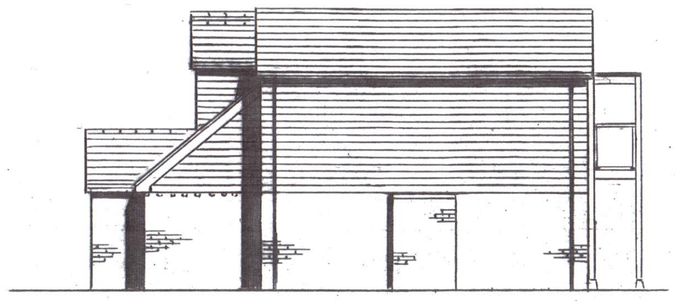

SIDE/WEST ELEVATION
1:100

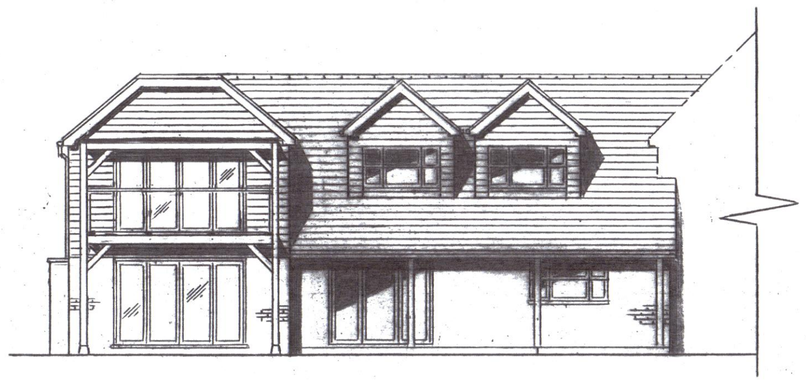

REAR/SOUTH ELEVATION
1:100

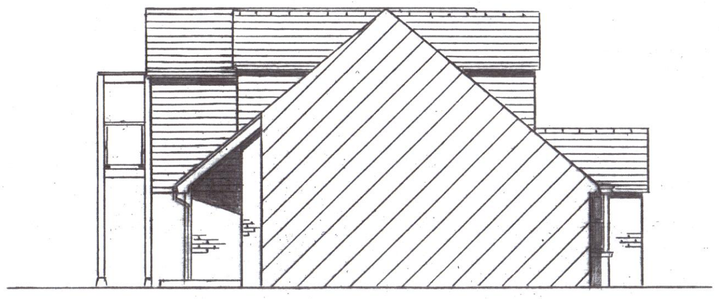

SIDE/EAST ELEVATION
1:100

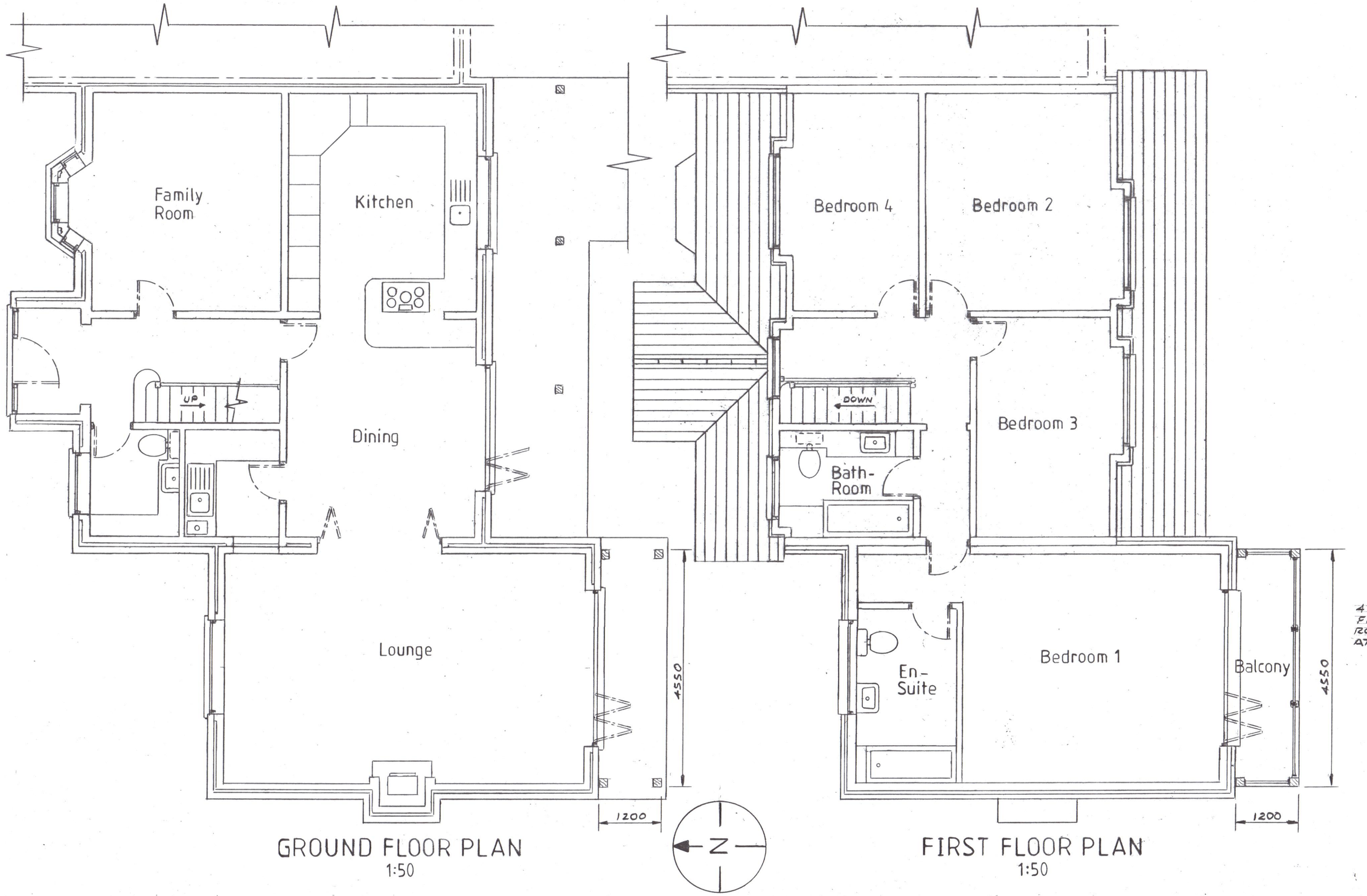

GROUND FLOOR PLAN
1:50

FIRST FLOOR PLAN
1:50

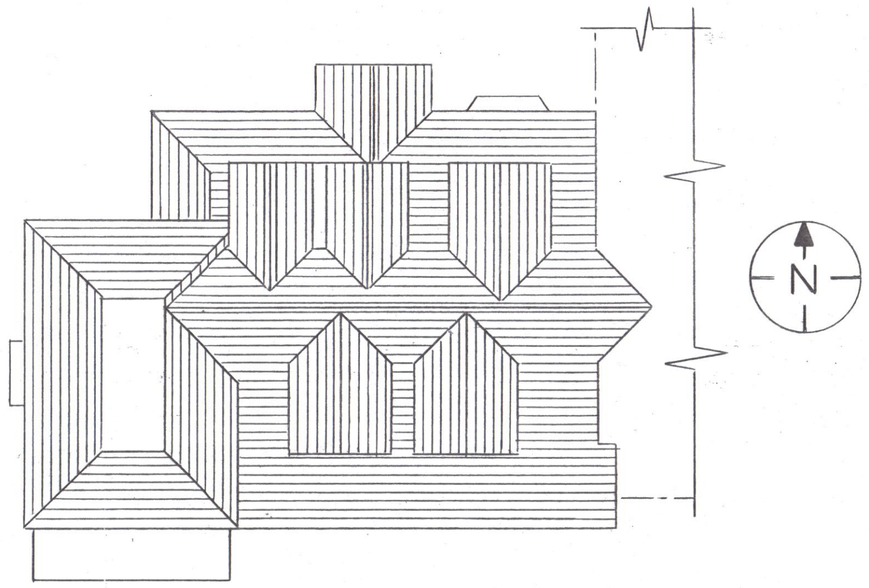

ROOF PLAN
1:100

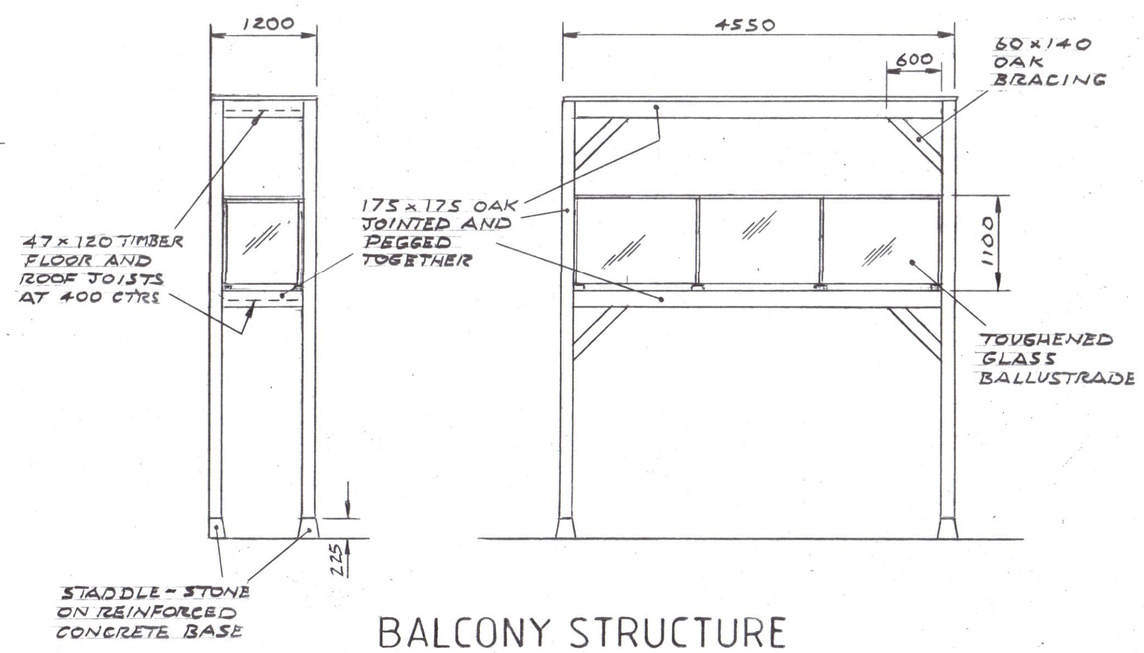

BALCONY STRUCTURE
1:50

0 1 2 3 4 5 6 7 8 9 10
1:100 Metres

0 1 2 3 4 5 6 7 8 9 10
1:50 Metres

Reference
DENRA/2046/1 - EXISTING FLOOR PLANS, ELEVATIONS AND ROOF PLAN.
SITE LAYOUT PLAN 1:500
LOCATION PLAN 1:1250

Copyright ©	
Scale	1:50 & 1:100
Drawn	
Date	Aug' 2026

DENRA DESIGN Ltd

Tel: 07973 911 870
denra.design@outlook.com

Title
PROPOSED COVERED BALCONY AT THE OLD PADDOCK, LEECHPOND HILL, LOWER BEEDING, WEST SUSSEX, RH13 6NR.

Rev.	Rev.	Sheet Size A1	DIMENSIONS IN MILLIMETRES

Drg No. DENRA/2046/2 Rev.