Site Plan

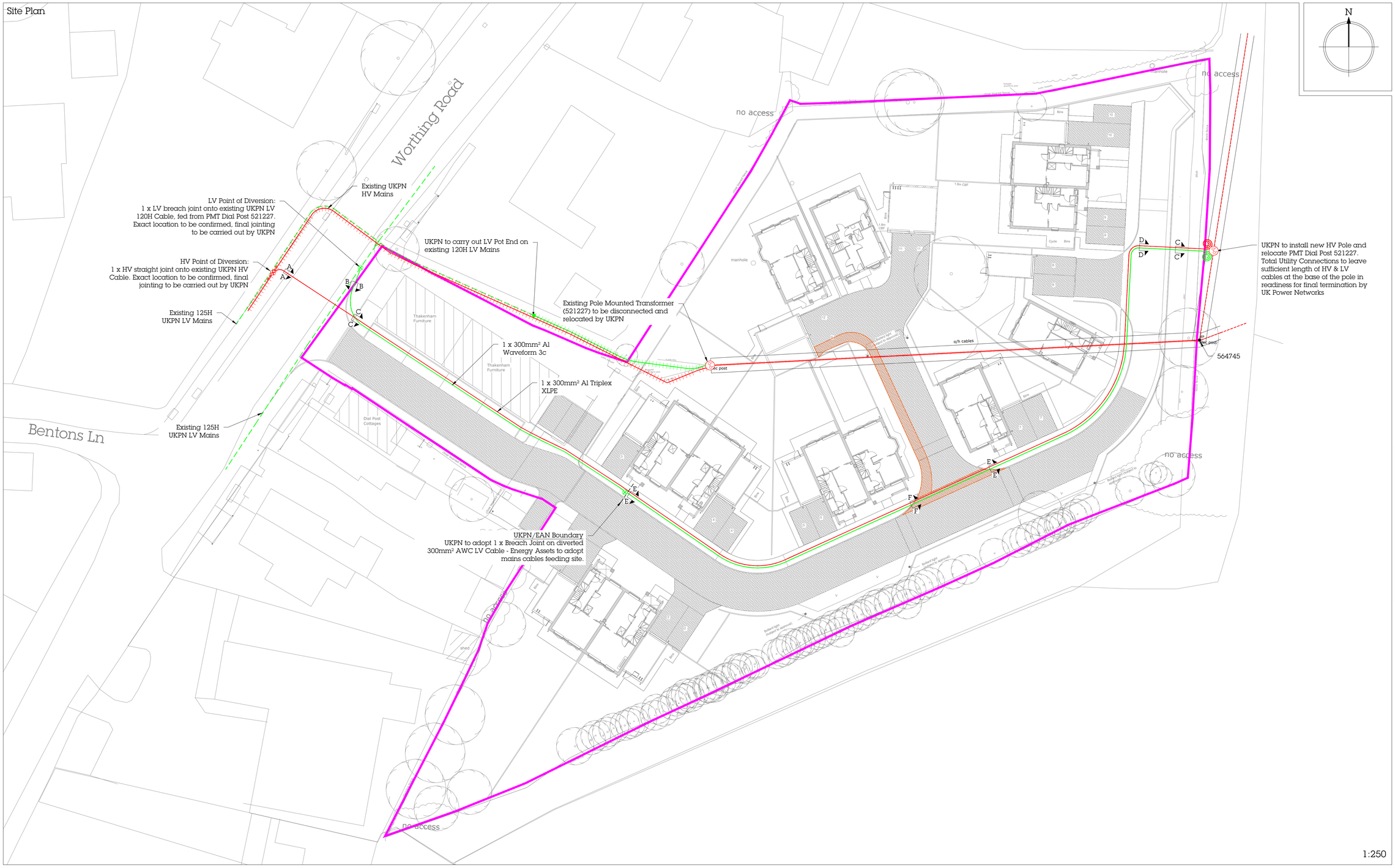

1:250

DNO Trench Cross Sections

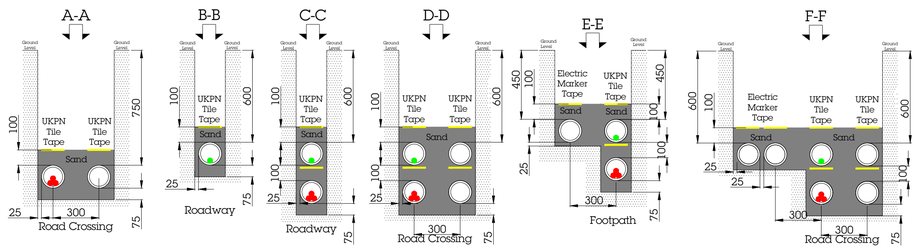

- Excavation, installation of ducting/warning tape and reinstatement will be carried out in accordance with the UKPN G81/EAN and NRSWA requirements.
- Where required, cables shall be installed within 125mm I.D. twin walled high density polyethylene to ENA TS 12-24 Class 2 and BS EN 61386:2010 (e.g. Ridgiduct) in black.

1:20

Schematic

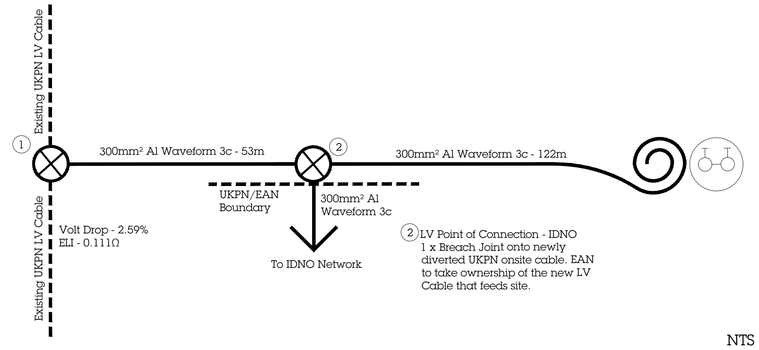

NTS

Design Notes

- UKPN to complete all final closing joints and terminations for diversions
- LV POC from newly diverted LV main to be carried out by TUC.
- All locations are indicative and shall be determined onsite.
- 3no. existing services to remain live. Jointing locations to take this onto account.
- No allowance with this design to divert these services to the new main.

Project	Blakers Yard
Reference	2404018
Address	Worthing Road Dial Post Horsham RH13 8NH
Customer	TDS Southern
Title	2404018-E-100-SP

UKPN 8200068233	Energy Assets EAN053221
Date 17-09-24	Revision Rev C
Design Engineer Taylor Murdoch	Checked Kyle Morgan
Electric Connection E515436, N119405	Offsite Length 15m
Offsite Excavation TUC	Onsite Excavation Client
Scale 1:250 @ A1	Page No. 1 of 1

Status: Verified For Construction

Important Notes:

- Any changes to the routes/layout that are shown are subject to review by the TUC designer and will be subject to detailed re-design work and network approval.
- All mains/service cables are to be laid following the design unless agreed prior to installation.
- All excavations to be carried out following the safety guidance stated in the 'Health and Safety Executive Guide Note 47 (HSEg47) - Avoiding Danger From Underground Services' and 'Health and Safety Executive Guide Note GS6 - Avoiding Danger From Overhead Power Lines'.
- All works to be carried out as per the latest Street Works UK publications.
- CDM 2015 - Clients' attention is drawn to their duties under the CDM 2015 regulations. Guidance on their duties can be found in HSE guidance document, L153, which is available from the HSE Website.
- TUC's Standard Electricity Connection Agreement & Technical Guidance Documents can be accessed through the TUC Website

Full details regarding Total Utility Connections' standard Terms and Conditions can be found on our website.

Legend

Symbol	Name	Colour Variants
⊗	Point of Connection	Red - HV Green - LV
— — —	Existing Cables	Red - HV Green - LV
	Pole Mounted Transformer (PMT)	N/A
———	Proposed Cables	Red - HV Green - LV Blue - Service Orange - Earthing
●	Cable Joint (HV, LV, PD)	Red - HV Green - LV Blue - Service
⊣⊣⊣⊣⊣⊣	Abandoned Cable	Red - HV Green - LV
———	Site Boundary	N/A

Rev		Drwn	Chkd
		Date	
C	Design Approved	GD	KM
		17-10-24	
C	Relocated HV & LV POD	GD	KM
		03-10-24	
B	Design amended following internal review	GD	KM
		03-10-24	
A	First Issue	CO	GD
		17-09-24	

total utility connections
www.tuclt.co.uk
029 2132 0350
enquiries@tuclt.co.uk