72 Cell Modules ( 1 : 20 )
max. module size l x w 2400x1150mm

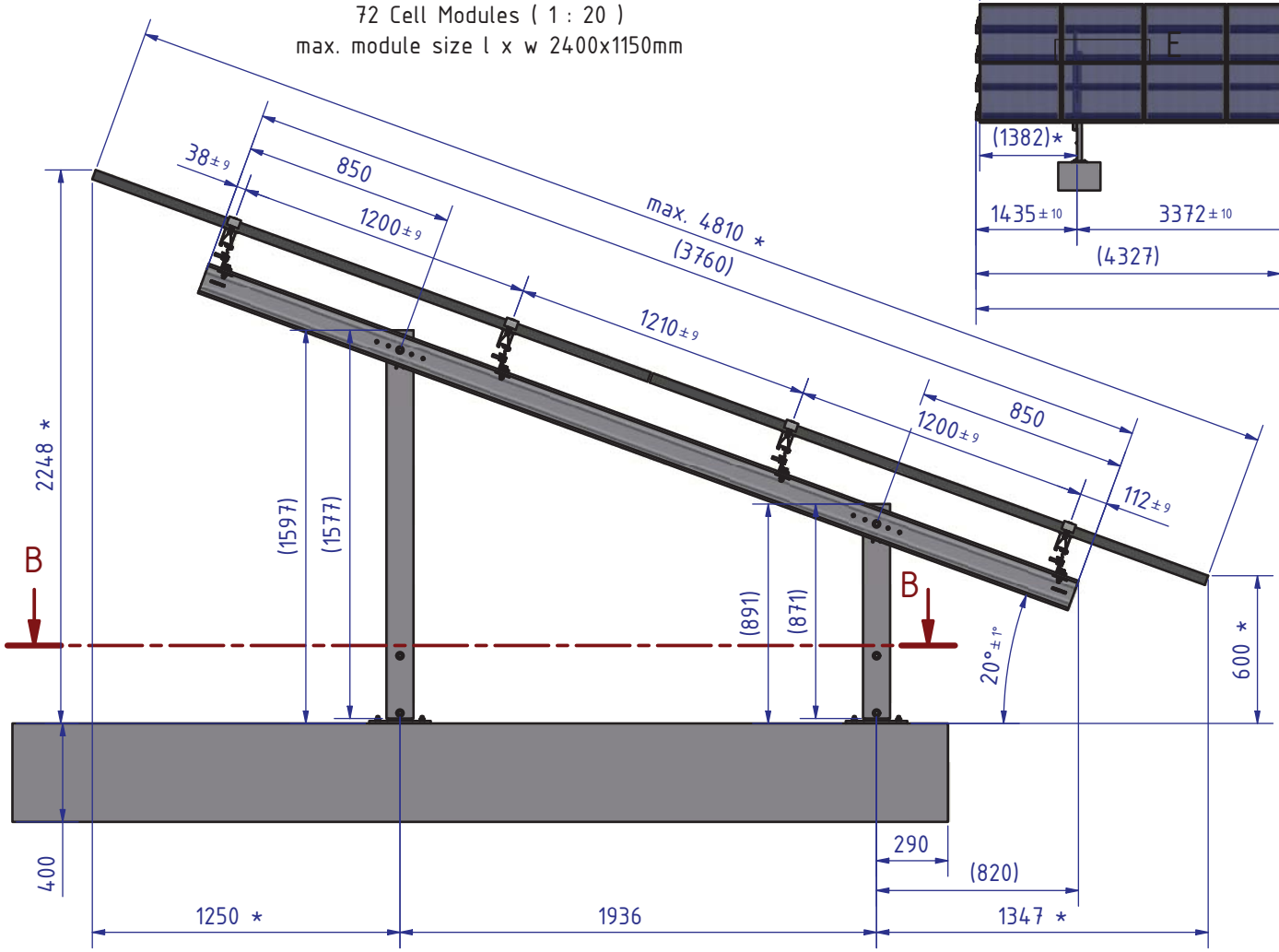


A ( 1 : 70 )

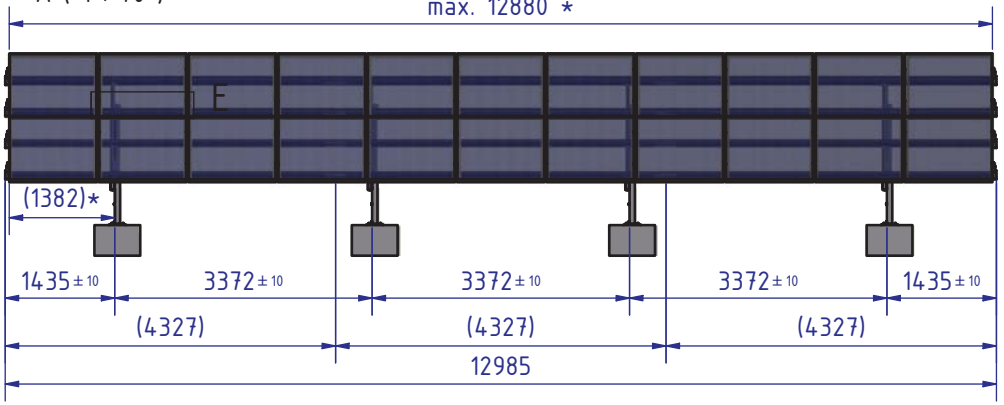


E ( 1 : 25 )




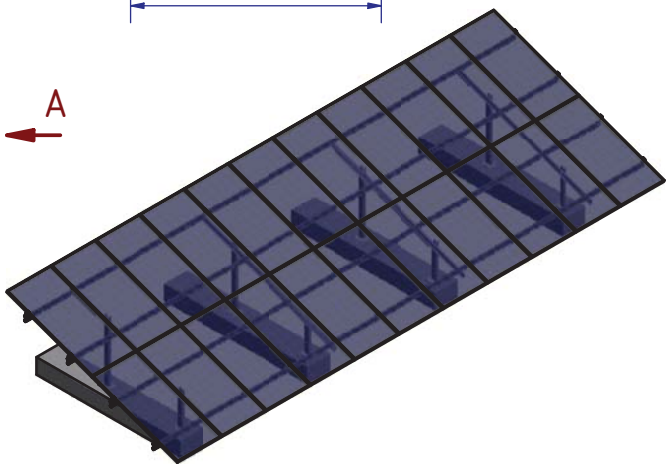


B-B ( 1 : 20 )

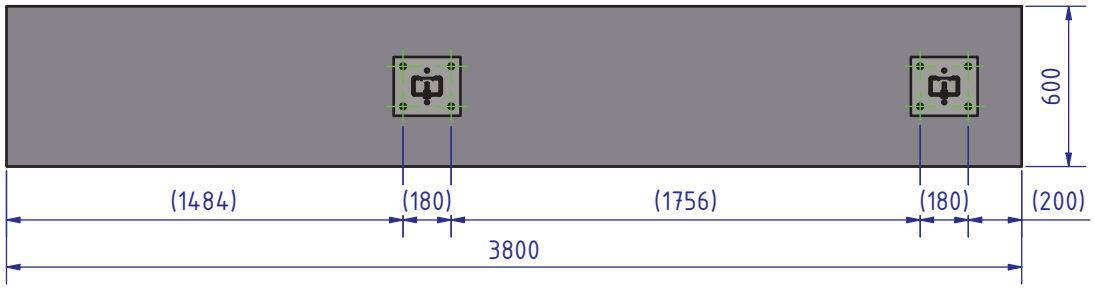


* = depending on module measurements
Module clamps must be ordered separately.

| | | | | | |
|---|---|---|---|---|---|
| SCHLETTER The Solar Mounting Group | Material: | Scale: 1 : 20 | Customer: | | Information: |
| | | | Job number: | | Information: |

| | Date | Name |
|---|---|---|
| Drawn | 09.12.2021 | SCHUPH |
| Checked | 05.10.2022 | OBERGU |
| Approved | 05.10.2022 | SCHMBE |

Name/Comment:
PVMaxS Kit 2V LT 11/72 4 Pfosten
PVMaxS Kit 2V LT 11/72 4 Posts

Particularities:
Tool number:
Area:
Weight:
Weight per meter:
Density:
Volume:
Surface specification:
Tolerance specifications:
Projection method:
Supplier:
Item number: 146003-050
1 / 5
A3
Status:
Changes
Date
Name
Status of construction: FR
Document ID: 10000100735-ZNG-000-00

All rights reserved. Explicit written consent by Schletter Group is required for any kind of reproduction of this document.

All rights reserved. Explicit written consent by Schletter Group is required for any kind of reproduction of this document.

60 Cell Modules ( 1 : 20 )
max. module size l x w 1700x1150mm

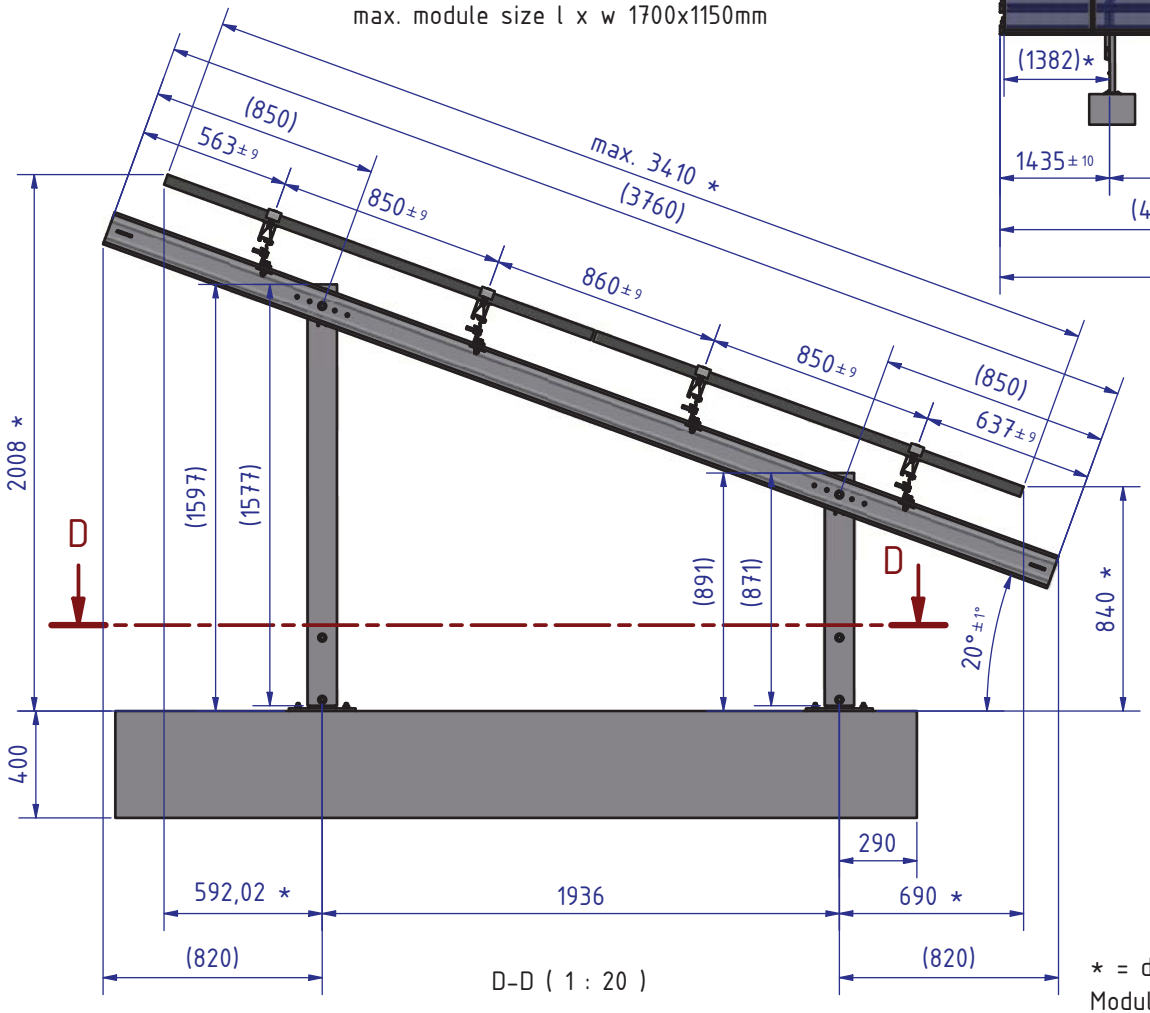


D-D ( 1 : 20 )

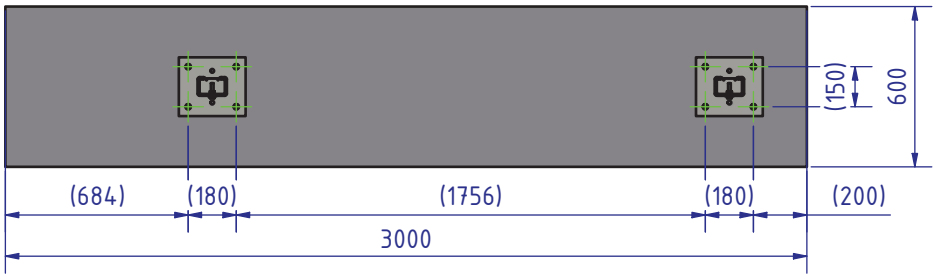


C ( 1 : 70 )

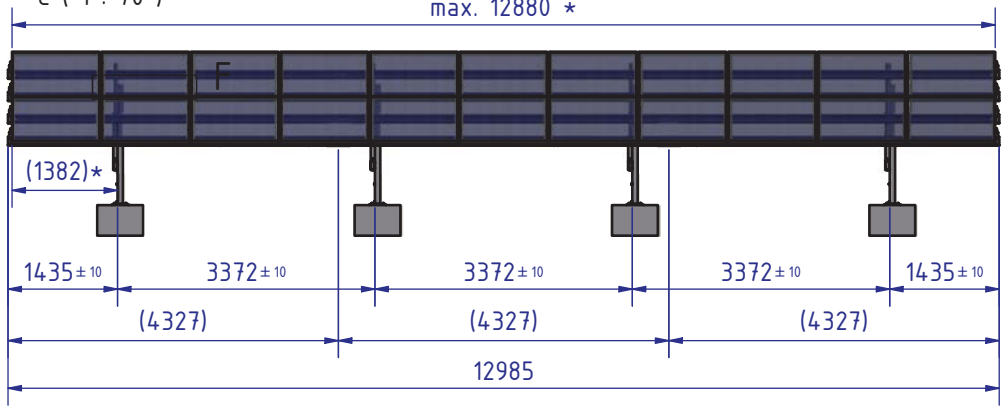


F ( 1 : 25 )

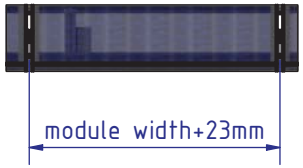


C

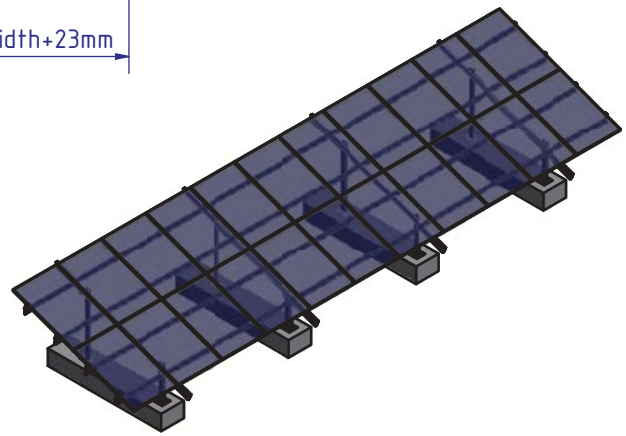

* = depending on module measurements
Module clamps must be ordered separately.

| | | | | | |
|---|---|---|---|---|---|
| SCHLETTER The Solar Mounting Group | Material: | Scale: 1 : 20 | Customer: | | Information: |
| | | | Job number: | | Information: |
| Particularities: | | | Name/Comment: PVMaxS Kit 2V LT 11/72 4 Pfosten<br>PVMaxS Kit 2V LT 11/72 4 Posts | | |
| Tool number: – | Area: – | | | | |
| Weight: – | Weight per meter: – | | | | |
| Density: – | Volume: – | | | | |
| | Date | Name | | | |
| Drawn | 09.12.2021 | SCHUPH | | | |
| Checked | 05.10.2022 | OBERGU | | | |
| Approved | 05.10.2022 | SCHMBE | | | |
| Surface specification: | | | | | |
| Tolerance specifications: | Projection method: | | Supplier: | | |
| | | | Item number: 146003-050 | | 2 / 5 A3 |
| Status: Changes | Date | Name | Status of construction: FR | | Document ID: 10000100735-ZNG-000-00 |

Foundation ( 1 : 10 )

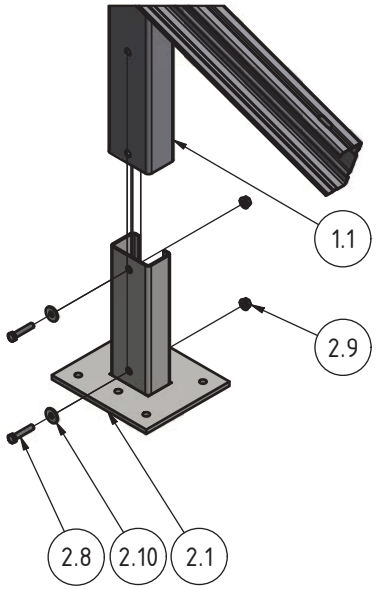


Foundation-Girder ( 1 : 10 )

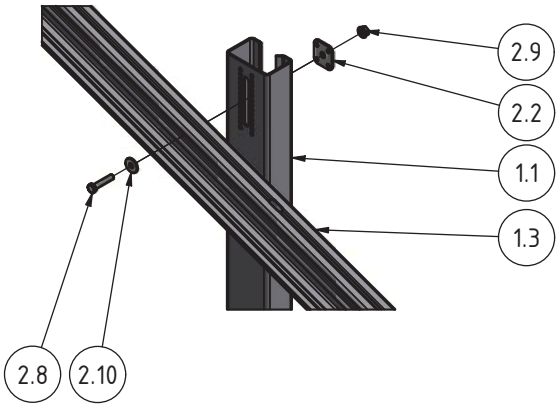


Girder-Purlin ( 1 : 5 )

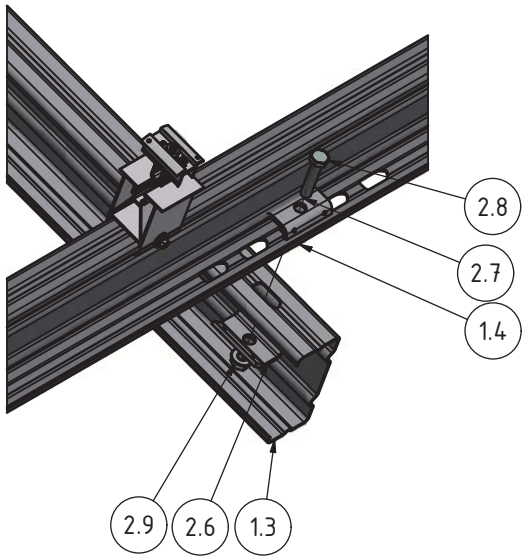


Module Clamp ( 1 : 5 )

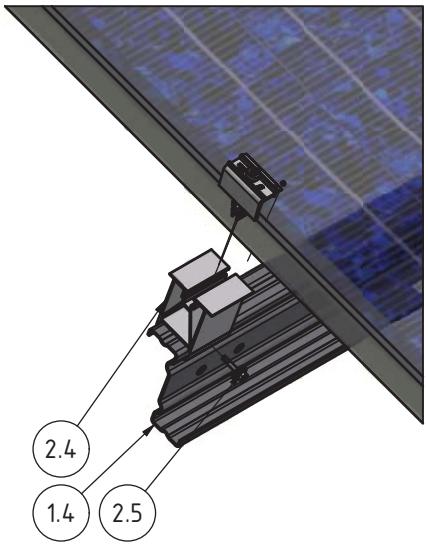


Girder-Purlin Holes ( 1 : 50 )

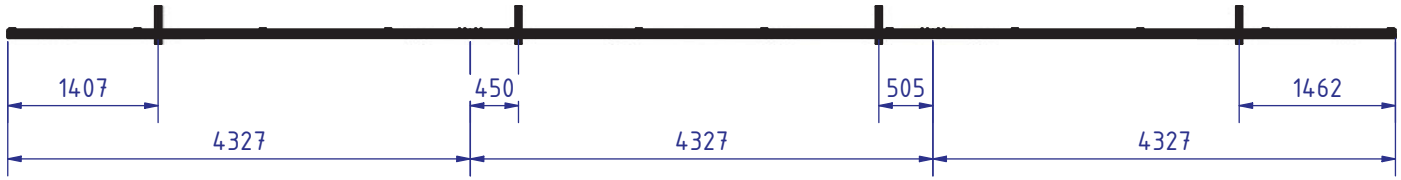


| | | | | | |
|---|---|---|---|---|---|
| SCHLETTER The Solar Mounting Group | | Material: | Scale: | Customer: | Information: |
| | | | | Job number: | Information: |
| Particularities: | | | | Name/Comment: PVMaxS Kit 2V LT 11/72 4 Pfosten<br>PVMaxS Kit 2V LT 11/72 4 Posts | |
| Tool number: – | Area: – | | Date / Name | | |
| Weight: – | Weight per meter: – | Drawn | 09.12.2021 SCHUPH | | |
| Density: – | Volume: – | Checked | 05.10.2022 OBERGU | | |
| | | Approved | 05.10.2022 SCHMBE | | |
| | | Surface specification: | | Supplier: | |
| | | Tolerance specifications: | Projection method: | Item number: 146003-050 | 3 / 5 A3 |
| Status | Changes / Date / Name | Status of construction: FR | | Document ID: 10000100735-ZNG-000-00 | |

All rights reserved. Explicit written consent by Schletter Group is required for any kind of reproduction of this document.

## Girder holes for 72 Cell Modules:

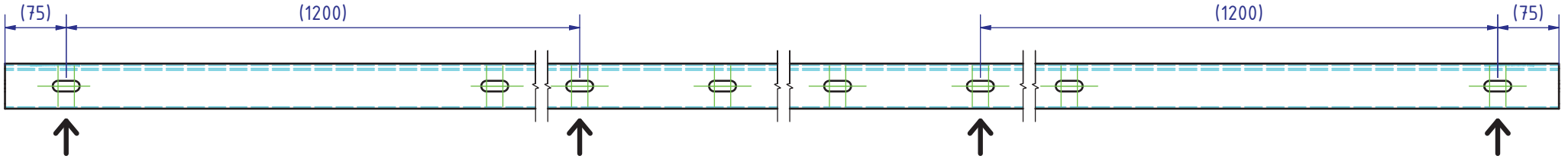


## Girder holes for 60 Cell Modules:

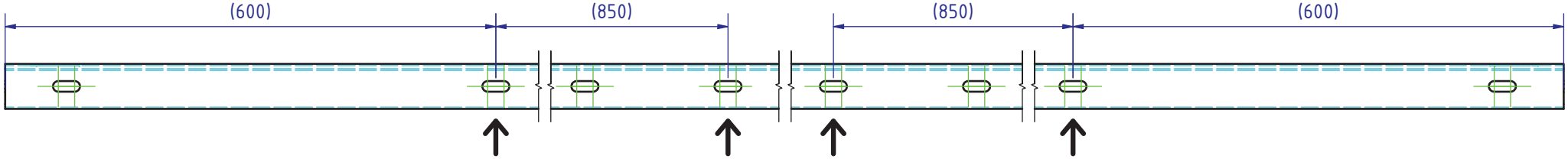


| | | | |
|---|---|---|---|
| SCHLETTER The Solar Mounting Group | Material: 1.0531 S550GD | Scale: 1 : 5 | Customer: / Information: |
| Particularities: | | | Job number: / Information: |
| Tool number: / Area: 1906889,822 mm^2 | | Drawn 09.12.2021 SCHUPH | Name/Comment: PVMaxS Kit 2V LT 11/72 4 Pfosten |
| Weight: 14,8252 kg / Weight per meter: | | Checked 05.10.2022 OBERGU | PVMaxS Kit 2V LT 11/72 4 Posts |
| Density: 7,8500 g/cm^3 / Volume: 1888559,834 mm^3 | | Approved 05.10.2022 SCHMBE | |
| Status / Changes / Date / Name | Surface specification: / Tolerance specifications: / Projection method: | Status of construction: FR | Supplier: / Item number: 146003-050 / 4 / 5 / A3 / Document ID: 10000100735-ZNG-000-00 |

All rights reserved. Explicit written consent by Schletter Group is required for any kind of reproduction of this document.

Parts list

| POS | QTY | ITEM NUMBER | NAME | RP NR. | STANDARD | MATERIAL | LENGTH | MASS |
|---|---|---|---|---|---|---|---|---|
| 1 | 1 | 146003-048 | PVMaxS Kit 2V LT 11/72 4 Profiles | | | | | |
| 1.1 | 4 | 143006-238 | Steel foundation post SRF6 871mm | 143006-200-0 | | 1.0529,S350GD | 871mm | 6,162 kg |
| 1.2 | 4 | 143006-237 | Steel foundation post SRF6 1577mm | 143006-200-0 | | 1.0529,S350GD | 1577mm | 11,213 kg |
| 1.3 | 4 | 144099-005 | FS Steel Girder 3760mm | 144099-009-0 | | 1.0531,S550GD | 3760mm | 14,825 kg |
| 1.4 | 12 | 144901-016-04327 | FS Purlin LT100 4327mm | 144901-016-0 | | 1.0531,S550GD | 4327mm | 13,189 kg |
| 2 | 1 | 146003-049 | PVMaxS Kit 2V LT 11/72 4 accsessory | | | | | |
| 2.1 | 8 | 143018-001 | SRF6 connection PvMax steel galvanized | | | | | 6,419 kg |
| 2.2 | 10 | 000016-673 | FS steel locking plate | 933100-033 | | 1.4301 X5CrNi 18-10 2B, | | 0,055 kg |
| 2.3 | 8 | 144999-085 | FS Purlin Connector LT/LC | | | 1.0976,S355MC | | 0,774 kg |
| 2.4 | 50 | 144919-052 | Modul Clamp Adapter 60 LT_LC | | | 3.3206,EN AW-6063 T66 | | 0,106 kg |
| 2.5 | 100 | 943755-925 | Self-tapping screw 5.5x25A2 w.seal.wash | | Schletter | A2 | | 0,009 kg |
| 2.6 | 16 | 144999-088 | FS UNO/DUO connector purlin-girder galv | | | 1.0976,S355MC | | 0,097 kg |
| 2.7 | 16 | 144999-086 | FS UNO/DUO connector purlin LC Girder | | | 1.0976,S355MC | | 0,074 kg |
| 2.8 | 100 | 942610-050 | BOLT HX ISO4017 M10X50 8.8 ZF | | ISO 4017 | 8.8 ZF | | 0,042 kg |
| 2.9 | 100 | 942000-011 | NUT FL LS EN1661 M10 8 ZF | | DIN EN 1661 | 8 ZF | | 0,015 kg |
| 2.10 | 100 | 942000-020 | WASHER ISO7093-1 10 200HV ZF | | ISO 7093-1 | 200HV ZF | | 0,012 kg |

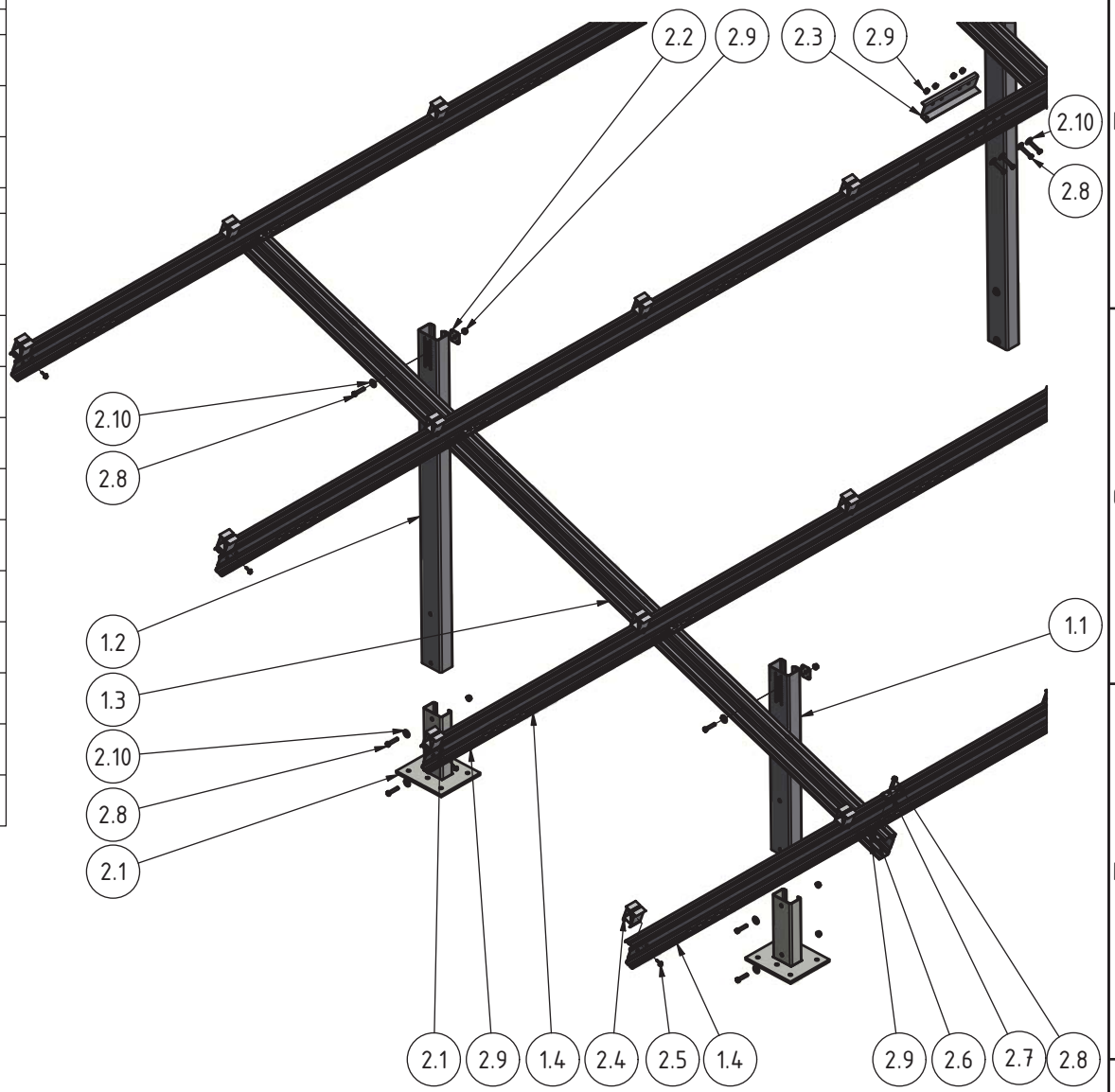


SCHLETTER
The Solar Mounting Group

Particularities:

| | |
|---|---|
| Tool number: – | Area: – |
| Weight: – | Weight per meter: – |
| Density: – | Volume: – |

| Status | Changes | Date | Name |
|---|---|---|---|
| | | | |

Material:

Scale: 1 : 20

| | Date | Name |
|---|---|---|
| Drawn | 09.12.2021 | SCHUPH |
| Checked | 05.10.2022 | OBERGU |
| Approved | 05.10.2022 | SCHMBE |

Surface specification:

Tolerance specifications:

Projection method:

Status of construction: FR

Customer:

Information:

Job number:

Information:

Name/Comment:
PVMaxS Kit 2V LT 11/72 4 Pfosten
PVMaxS Kit 2V LT 11/72 4 Posts

Supplier:

Item number:
146003-050

5 / 5
A3

Document ID:
10000100735-ZNG-000-00

All rights reserved. Explicit written consent by Schletter Group is required for any kind of reproduction of this document.