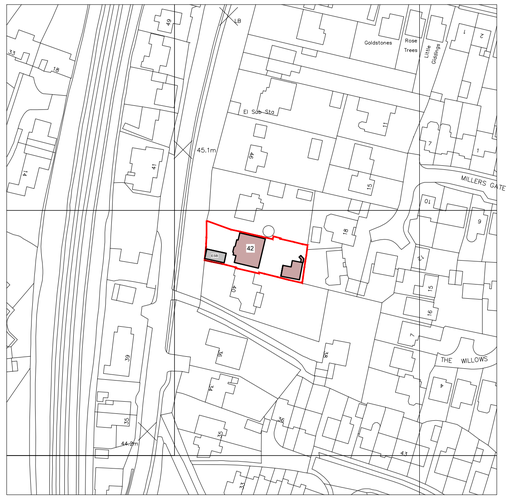

Site Plan
1:1250

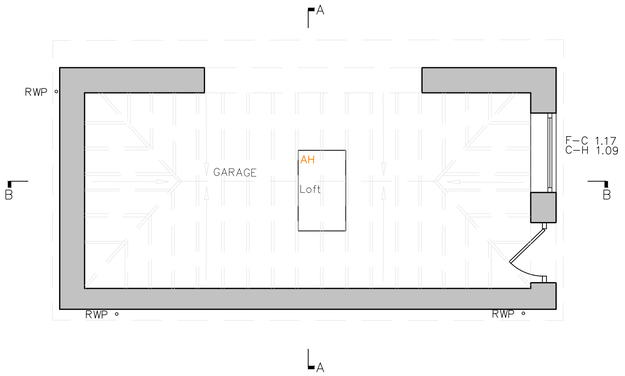

GROUND FLOOR PLAN - AS BUILT STUDIO BUILDING (retrospective)

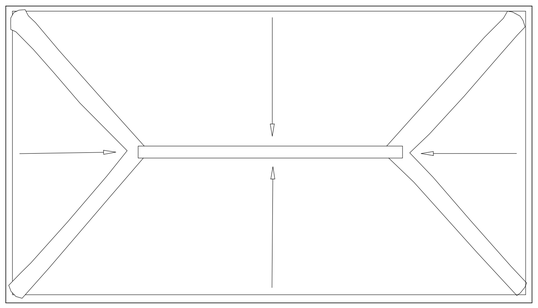

ROOF PLAN - AS BUILT STUDIO BUILDING (retrospective)

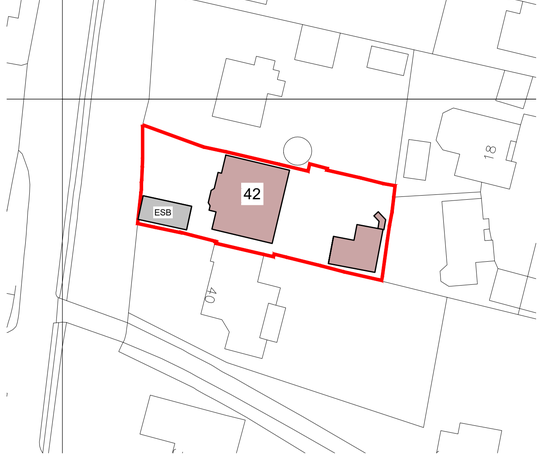

Block Plan
1:500
N

Note:
All levels and dimensions are to be checked on site.
This drawing is to be read in conjunction with all relevant consultants' requirements, drawings and specifications.
Any discrepancies between consultants' drawings to be reported to the Contract Administrator before any relevant work commences.

Copyright: 2024 Eye For Detail Architects ©

0 10m 50m 100m 1:1250
0 10m 20m 30m 40m 50m 1:500
0 1m 2m 3m 4m 5m 10m 1:100
0 1m 2m 3m 4m 5m 1:50

PREVIOUSLY SUBMITTED AS DC/23/0648 NOW RESUBMITTING - STUDIO BUILDING AS BUILT (retrospective)

Ms Laura Harvey
42 Pondtail Road, Horsham, W. Sussex, RH12 5HR

Proposed Erection Of A Studio Building As Built (retrospective)

Proposed Site/Block Location Plans As Built
Ground Floor & Roof Plan

Scale	Job	Dwg	Rev
1:50, 1:500 & 1:1250	4125/ESB	AD01ESB	.

Eye For Detail ARCHITECTS
Oakwood House
North Heath Lane
Horsham
W. Sussex
RH12 5PJ
T: 01403 211868
Mob: 07540787365
info@efdarchitects.co.uk
info@efdarchitects.com
www.efdarchitects.co.uk