DO NOT SCALE

Roof Cladding: Natural Grey P6R Fibre Cement with either Vneted, AIternate Vented or Closed Ridge. With 20 No. 9ft 6Ins 8oz SAB Class 3 Rooflights with Red caps as per Health & Safety Requirements. All Rainwater goods, i.e. Grey PVC Gutters and Grey PVC Downpipes.

Side Cladding and side rails not Required.

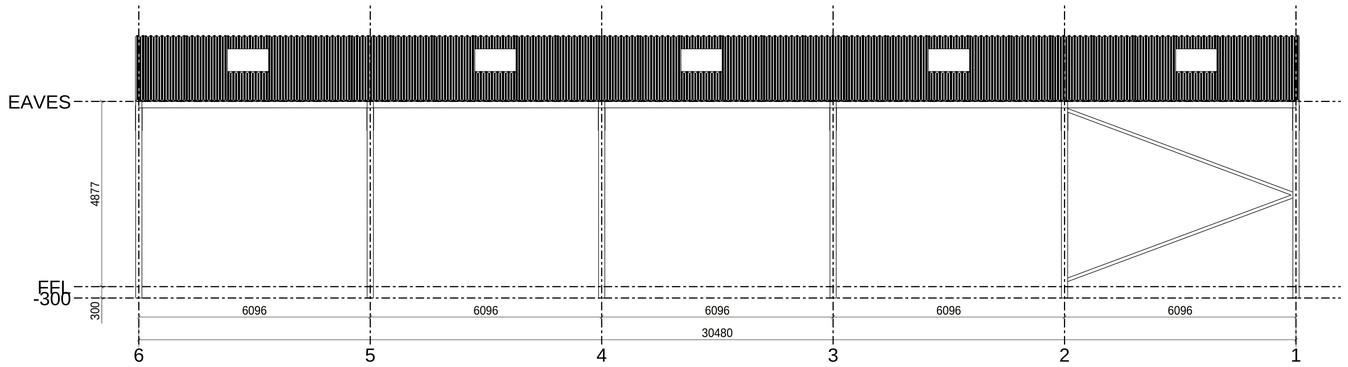

ELEVATION ON SIDE A
VIEWED FROM OUTSIDE OF BUILDING

Foundation design allows for a safe ground bearing capacity of 150kN/sqm.

Steelwork shotblast to BS SA 2.5. Painted 75 microns Zinc Phosphate High Build Primer - Colour 18-E-53 (BLUE)

The entire footprint of the building and a further 3.5m clear working area must be provided to the building for the duration of the erecting works. The ground must be suitably prepared with stone to provide a firm, level and smooth operating surface. It is advisable to lay a geotextile membrane below the stone to prevent sinkage. This must be done to prevent un-safe plant operations.

All concrete and plant supplied and installed by customer.

Prior to commencement of erection, holding down bolts must have the cones used while installing the holding down bolts completely removed. Shufflebottom Ltd. will not remove the cones.

The supply of materials and the construction will be undertaken in accordance with BS5502/ BS5950/ EN1090:2 (whichever applies on the confirmation/ order). All tolerances, permitted deviations, manufacturers manuals and specifications of all products and services as stated and referred to within the applicable documentation will prevail.

Note:
Mass concrete foundations to be grade C25/30 with a minimum O.P.C content of 275Kg/m³.
A max water cement ratio 0.65 and 20mm nominal size aggregate.

Open Gable, Bargeboard only

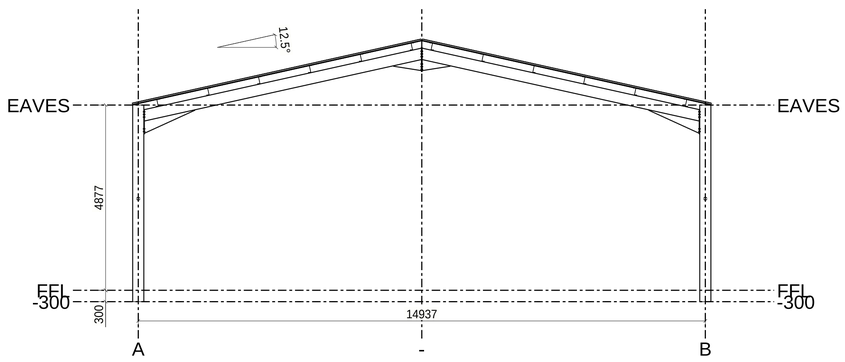

ELEVATION ON GABLE 1
VIEWED FROM OUTSIDE OF BUILDING

Open Gable, Bargeboard only

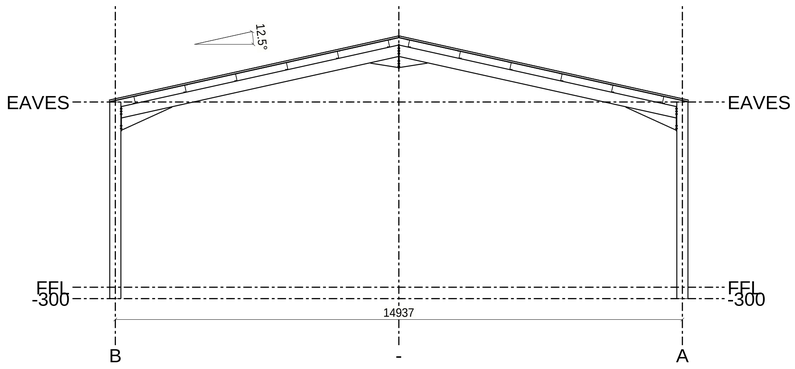

ELEVATION ON GABLE 6
VIEWED FROM OUTSIDE OF BUILDING

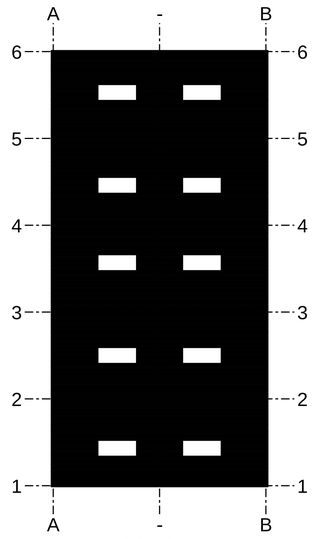

ROOF PLAN

Roof Cladding: Natural Grey P6R Fibre Cement with either Vneted, AIternate Vented or Closed Ridge. With 20 No. 9ft 6Ins 8oz SAB Class 3 Rooflights with Red caps as per Health & Safety Requirements. All Rainwater goods, i.e. Grey PVC Gutters and Grey PVC Downpipes.

Side Cladding and side rails not Required.

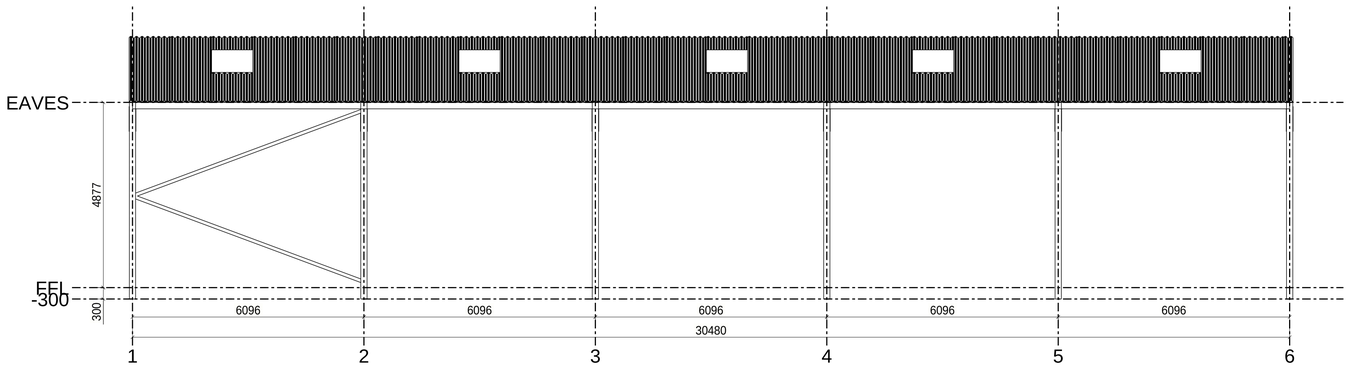

ELEVATION ON SIDE B
VIEWED FROM OUTSIDE OF BUILDING

REV MARK	REVISION DESCRIPTION	REVISION DATE

Shufflebottom Ltd
Cross Hands Business Park
Cross Hands
Llanelli, Carmarthenshire
SA14 6RE - Tel: 01269 831831

SHUFFLEBOTTOM

DRAWING TITLE	ELEVATIONS		
CONTRACT	HARVIE		
MODELLED BY	LS	ISSUE DATE	
CONTRACT NO	D15030	SCALE	1:75 1:200
DRAWING No	G [1]	REVISION No.	

FOR PLANNING

Tekla Structures